English

Instruction and operation manual

S402

Thermal mass flow sensor

Dear Customer,

Thank you for choosing our product.

Please read the operating instructions in full and carefully observed them before starting up the device. The manufacturer cannot be held liable for any damage which occurs as a result of non-observance or non-compliance with this manual.

Should the device be tampered with in any manner other than a procedure which is described and specified in the manual, the warranty is void and the manufacturer is exempt from liability.

The device is destined exclusively for the described application.

SUTO offers no guarantee for the suitability for any other purpose. SUTO is also not liable for consequential damage resulting from the delivery, capability or use of this device.

Table of Contents

1 Safety instructions....4
2 Registered trademarks....6
3 RF exposure information and statement....7
4 Application....8
5 Features....8
6 Technical data....9
6.1 General....9
6.2 Electrical data....9
6.3 Output-signals....10
6.4 Accuracy 10
6.5 Volumetric flow ranges....11
7 Dimensional drawing....12
8 Determining the installation point....13
8.1 Reserving the inlet and outlet sections....14
9 Installing the sensor....16
9.1 Installation requirements....16
9.2 Installation....17
9.2.1 Calculating the insertion depth....17
9.2.2 Installing the sensor 19
9.2.3 Removing the sensor 21
9.3 Electrical connection....21
10 Sensor signal outputs....23
10.1 Analog output....23
10.2 Pulse output....23
10.2.1 Pulse connection diagram....25
10.3 Modbus output....26
10.3.1 Modbus settings registers....26
10.3.2 Values registers....27
11 Service App S4C-FS....28
12 Calibration....29
13 Maintenance....29
14 Disposal or waste....29
15 Appendix A - Modbus communication example....30

1 Safety instructions

Please check if this instruction manual matches the product type.

Please observe all notes and instructions indicated in this manual. It contains essential information which must be observed before and during installation, operation and maintenance. Therefore this instruction manual must be read carefully by the technician and by the responsible user or qualified personnel.

This instruction manual must be available at the operation site of the flow sensor at any time. In case of any obscurities or questions, regarding this manual or the product, please contact the manufacturer.

WARNING!

Compressed air!

Any contact with quickly escaping air or bursting parts of the compressed air system can lead to serious injuries or even death!

- Do not exceed the maximum permitted pressure range (see sensors label).
- Only use pressure tight installation material.
- Avoid that persons get hit by escaping air or bursting parts of the instrument.
- The system must be pressureless during maintenance work.

WARNING!

Voltage used for supply!

Any contact with energized parts of the product, may lead to an electrical shock which can lead to serious injuries or even death!

- Consider all regulations for electrical installations.
- The system must be disconnected from any power supply during maintenance.
- Any electrical work on the system is only allowed by authorized qualified personal.

ATTENTION!

Permitted operating parameters!

Observe the permitted operating parameters, any operation exceeding this parameters can lead to malfunctions and may lead to damage on the instrument or the system.

- Do not exceed the permitted operating parameters.
- Make sure the product is operated in its permitted limitations.
- Do not exceed or undercut the permitted storage and operation temperature and pressure.
- The product should be maintained and calibrated frequently, at least annually.

General safety instructions

- It is not allowed to use the product in explosive areas.
- Please observe the national regulations before/during installation and operation.

Remarks

- It is not allowed to disassemble the product.
- Always use spanner to mount the product properly.

ATTENTION!

Measurement values can be affected by malfunction!

The product must be installed properly and frequently maintained, otherwise it may lead to wrong measurement values, which can lead to wrong result.

- Always observe the direction of the flow when installing the sensor. The direction is indicated on the housing.
- Do not exceed the maximum operation temperature at the sensor probe tip.
- Avoid condensation on the sensor element because this will affect accuracy enormously.

Storage and transportation

- Make sure that the transportation temperature of the sensor is between -30 ... +70°C.
- For storage and transportation, it is recommended to use the packaging which comes with the sensor.
- Please make sure the storage temperature of the sensor is between -10 ... +50°C.
- Avoid direct UV and solar radiation during storage.
- For the storage the humidity must be <90%, no condensation.

2 Registered trademarks

SUTO®	Registered trademark of SUTO iTEC
MODBUS®	Registered trademark of the Modbus Organization, Hopkinton, USA
HART®	Registered trademark of the HART Communication Foundation, Austin, USA
PROFIBUS®	Registered trademark of the PROFIBUS User Organization, Karlsruhe, Germany
Android™, Google Play	Trademarks of Google LLC

3 RF exposure information and statement

This equipment complies with FCC RF radiation exposure limits set forth for an uncontrolled environment. This equipment should be installed and operated with minimum distance of 20 cm between the radiator and your body.

This device complies with part 15 of the FCC rules. Operation is subject to the following two conditions: (1) this device may not cause harmful interference, and (2) this device must accept any interference received, including interference that may cause undesired operation.

Remark: The manufacturer is not responsible for any radio or TV interference caused by unauthorized modifications to this equipment. Such modifications could void the user's authority to operate the equipment.

Remark: This equipment has been tested and found to comply with the limits for a Class B digital device, pursuant to part 15 of the FCC Rules. These limits are designed to provide reasonable protection against harmful interference in a residential installation. This equipment generates uses and can radiate radio frequency energy and, if not installed and used in accordance with the instructions, may cause harmful interference to radio communications. However, there is no guarantee that interference will not occur in a particular installation. If this equipment does cause harmful interference to radio or television reception, which can be determined by turning the equipment off and on, the user is encouraged to try to correct the interference by one or more of the following measures:

- Reorient or relocate the receiving antenna.
- Increase the separation between the equipment and receiver.
- Connect the equipment into an outlet on a circuit different from that to which the receiver is connected.
- Consult the dealer or an experienced radio/TV technician for help。
- This device and its antenna(s) must not be co-located or operating in conjunction with any other antenna or transmitter.

4 Application

The S402 is a flow sensor that is designed to measure the consumption of compressed air and gases within the permissible operating parameters. These parameters can be found in chapter 6 Technical data.

The S402 can measure the following values:

- Volumetric flow of the compressed air or gas.
- Total consumption of the compressed air or gas.

The default factory settings are: Volumetric flow in m^3/h and Total Consumption in m^3. Other units can be made available using the mobile service app S4C-FS.

The S402 flow sensor is mainly used in compressed air systems in industrial environments. The S402 is not designed to be used in explosive areas. For the use in explosive areas please contact the manufacturer.

5 Features

- Insertion type flow sensor for easy installations under pressure through a ball valve.
- Thermal mass flow measurement, virtually independent of pressure and temperature changes.
- IP65 casing provides robust protection in the industrial environment.
- Very fast response time.
- High accuracy and wide measuring ranges. Special ranges on request.
- Tube diameters from 1/2” up to 12”, larger diameters on request.
- Android app for remote configuration and online reading
- Various interface available such as analogue, pulse, Modbus/RTU, and MBUS.

6 Technical data

6.1 General

CE FC FCC ID: 2ASK2-SUTO-005	
Parameters	Standard unit flow: m^3/h Other units: m^3/min, l/min, l/s, cfm, kg/h, kg/min, kg/s Consumption units: m^3, ft^3, kg
Reference conditions	ISO1217 20°C 1000 mbar (Standard-Unit) DIN1343 0°C 1013.25 mbar (Norm-Unit)
Principle of measurement	Thermal mass flow
Sensor	Glass-coated resistive sensor
Measuring medium	Air, gas (non corrosive gas)
Operating temperature	-30 ... +140°C fluid temperature -30 ... +70°C casing
Humidity of the meas. medium	< 90%, no condensation
Operating pressure	1.6 MPa
Housing material	PC + ABS
Material of the probe shaft, sensor head (wetted parts)	Stainless steel 1.4404 (SUS 316L)
Protection class	IP65
Dimensions	See dimensional drawing on page 12
Tube diameter	1/2” to 12” (bigger diameters on request)
Process connection	G1/2” (ISO 228/1)
Weight	450 g (220 mm standard)

6.2 Electrical data

Power supply	15 ... 30 VDC, 200 mA

6.3 Output-signals

Analogue output	Signal: 4 ... 20 mA, isolated Scaling: 0 to max flow Max load: 250R
Pulse output	1 pulse per consumption unit, isolated switch, max. 30 VDC, 200 mA (pulse length: 10 ... 120 ms, depending on flow rate)
Modbus output	See chapter 10.3

6.4 Accuracy

Accuracy*	±(2% of reading + 0.3% FS) Temperature drift: < 0.05%/K
Stated accuracy at	Ambient/process temperature 23°C ± 3°C Ambient/process humidity <90% Process pressure at 0.6 MPa
Repeatability	±0.25% of reading
*Specified accuracy is valid only within the minimum and maximum flow rates that are indicated in section 6.5.	

6.5 Volumetric flow ranges

The measuring ranges are stated under the following conditions:

- Standard flow in air
- Reference pressure: 1000 hPa
- Reference temperature: 20°C

Inch	DN	Inner diameter (mm)	S402-S (m³/h)	S402-M (m³/h)
1"	DN25	27.3	0.5 ... 147.7	0.6 ... 294.7
1¼"	DN32	36.0	0.9 ... 266.3	1.2 ... 531.5
1½"	DN40	41.9	1.2 ... 366.7	1.5 ... 731.9
2"	DN50	53.1	2.0 ... 600.1	2.5 ... 1197.6
2½"	DN65	68.9	3.5 ... 1026.5	5.0 ... 2048.6
3"	DN80	80.9	5.0 ... 1424.4	7.0 ... 2842.7
4"	DN100	100.0	10 ... 2183.3	12 ... 4357.2
5"	DN125	125.0	13 ... 3419.6	18 ... 6824.4
6"	DN150	150.0	18 ... 4930.1	25 ... 9838.9
8"	DN200	200.0	26 ... 8785.6	33 ... 17533.3
10"	DN250	250.0	40 ... 13743.9	52 ... 27428.5
12"	DN300	300.0	60 ... 19814.8	80 ... 39544.1

NOTE:

To calculate flow ranges based on pipe and reference conditions in your site, download and install the "Flow range calculator" tool for free from http://www.suto-itec.com.

To fast access the tool download page, enter "flowrange" (without spaces) in the search field and click the search result.

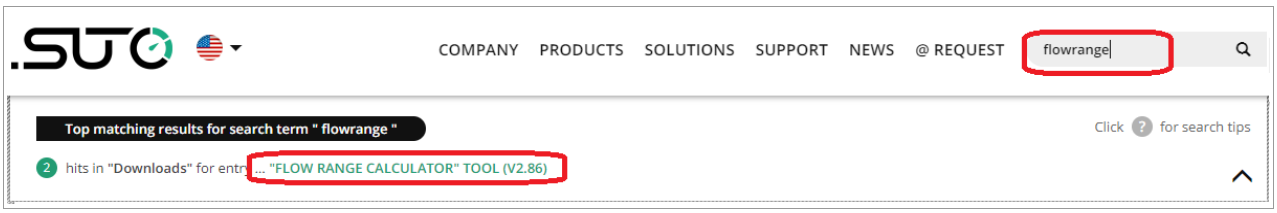

7 Dimensional drawing

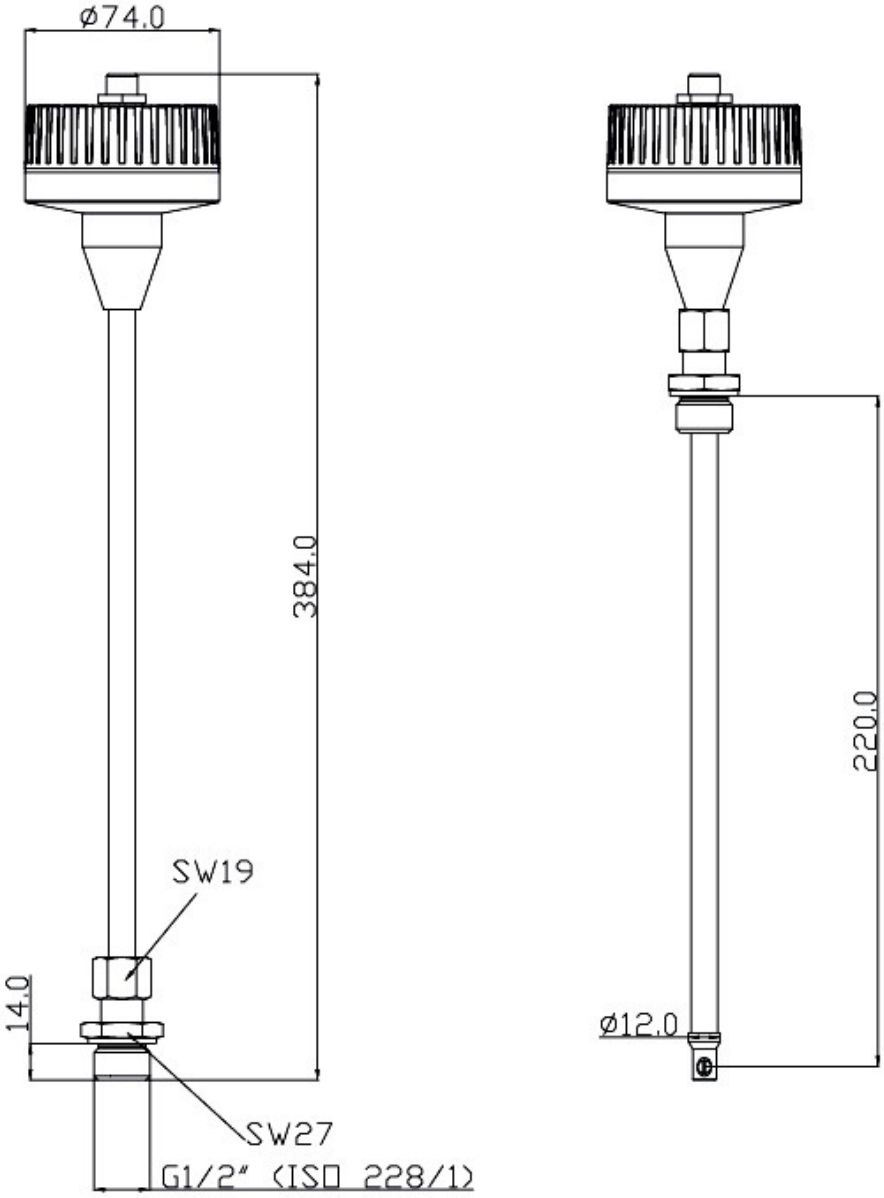

8 Determining the installation point

In order to maintain the accuracy stated in the technical data, the sensor must be inserted in the centre of a straight pipe section with unhindered flow characteristics.
Unhindered flow characteristics are achieved if the section in front of the sensor (inlet) and behind the sensor (outlet) are sufficiently long, absolutely straight and free of obstructions such as edges, seams, curves and so on.
Please consider that enough space exists at your site for an adequate installation as described in this manual.

ATTENTION!

Wrong measurement is possible if the sensor is not installed correctly.

- Careful attention must be paid to the design of the inlet and outlet section. Obstructions can cause counter-flow turbulence as well as turbulence in the direction of the flow.
- The sensor is for indoor use only! At an outdoor installation, the sensor must be protected from solar radiation and rain.
- It is strongly recommend not to install S402 permanently in wet environment, which exists usually right after a compressor outlet.

8.1 Reserving the inlet and outlet sections

The thermal measuring principle may be sensible to inlet and outlet conditions. We recommend the following minimum straight inlet and outlet sections to ensure an accurate measurement. The S402 should be always installed upstream from obstacles like valves, filter, reductions etc. In common, the sensor should be installed as far as possible away from any disturbances.

Note: If there is any combination of the below situations, the longest straight inlet section must be maintained.

- Expansion

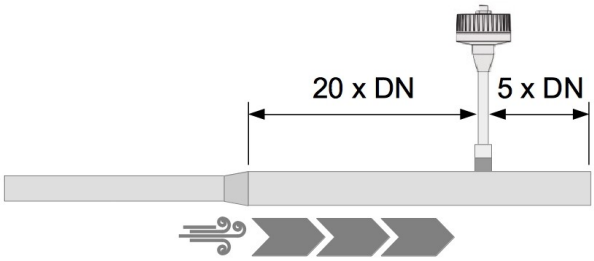

- Reduction

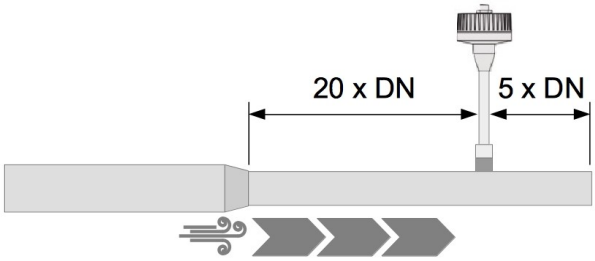

- 90° bend

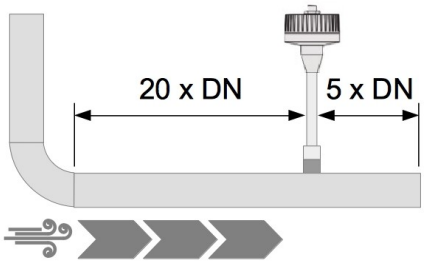

- 2 x 90° bend

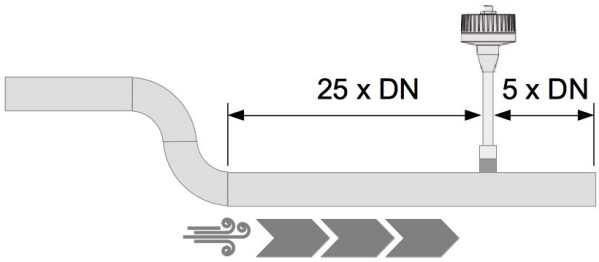

- 3 dimensional bend

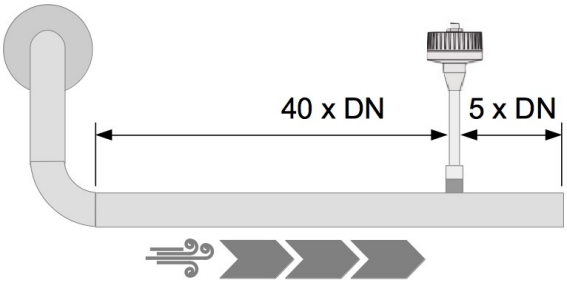

- T-piece

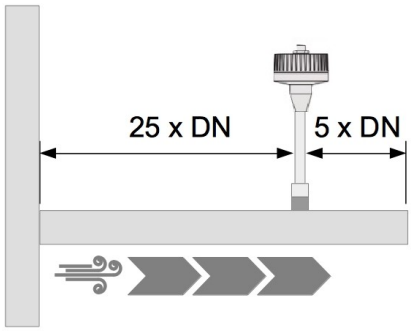

- Shut-off valve

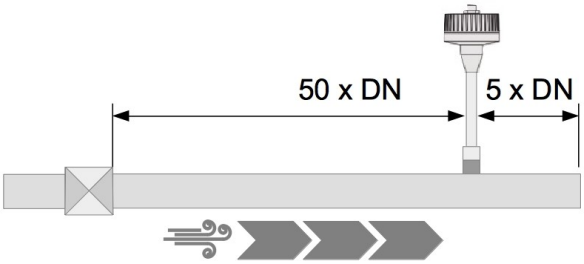

- Filter or similar (unknown objects)

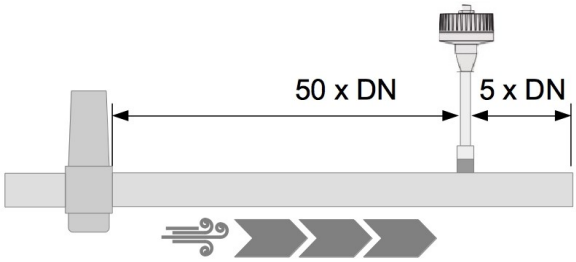

9 Installing the sensor

Before installing the sensor, please make sure that all components listed below are included in your package.

Qty	Description	Item no.
1	Sensor	S695 4105
1	Copper gasket sealing ring	NA
1	Alignment key	NA
1	Depending on orders: M12 5-pore plug or M12 cable	5-pore plug: C219 0059 Cable including a 5-pore plug: A553 0104/A553 0105 Cable including a 6-pore plug: A553 0106
1	Instruction manual	NA
1	Calibration certificate	NA

9.1 Installation requirements

To install the sensor, a ball valve or a nozzle is needed.

- The inner thread must be G 1/2”.
- The diameter of the hole must be ≥ 13 mm, otherwise the shaft cannot be inserted.

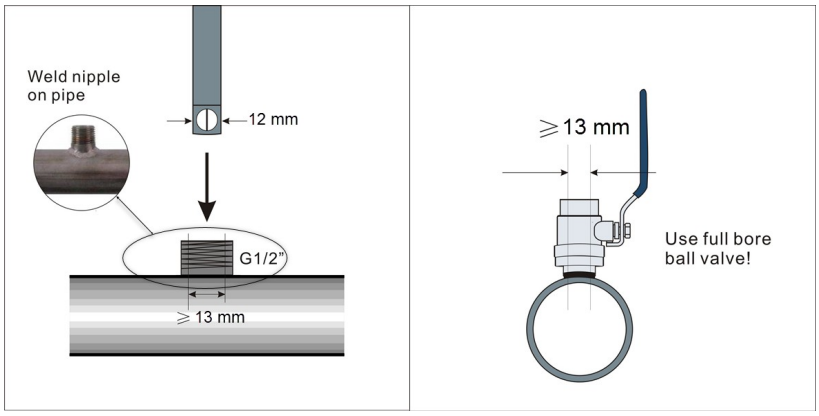

9.2 Installation

The following steps explain the procedure of an appropriate installation.

9.2.1 Calculating the insertion depth

The sensor probe tip must be placed in the center of the pipe. For this the probe shaft has a scale. To determine the right position please calculate the insertion depth as described below.

Center installation is the default and recommended installation type.

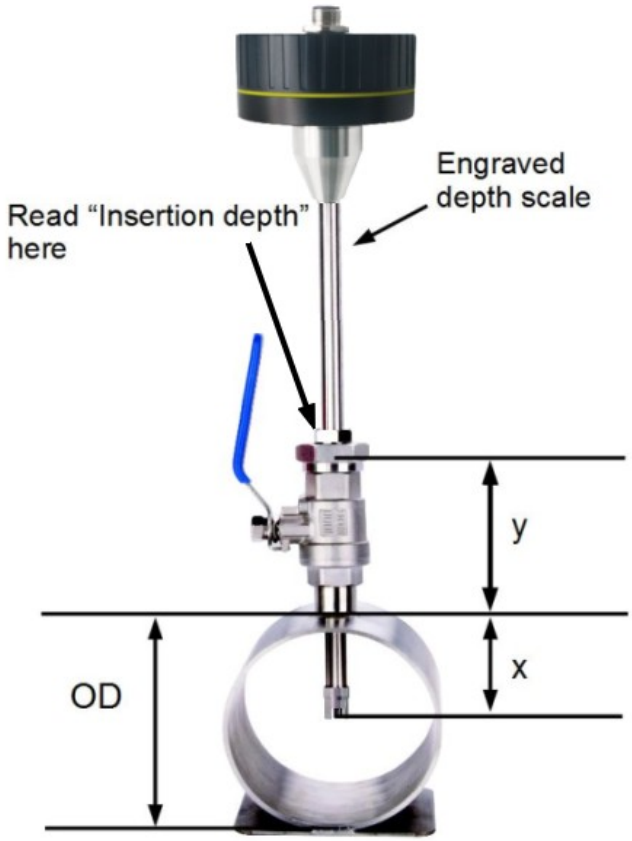

Insertion depth $= x + y$

$x = \frac{OD}{2}$;

OD is Outer Diameter of the pipe

y = length of the ball valve

Calculation example:

A 2”-diameter pipe and an 87 mm-length ball valve:

$OD = 60.3\,\text{mm}$

$x = \frac{OD}{2} = \frac{60.3\,\text{mm}}{2} = 30.15\,\text{mm}$

$y = 87\,\text{mm}$;

Insertion depth

$= 30.15\,\text{mm} + 87\,\text{mm} = 117.15\,\text{mm}$

For bigger pipe diameters (>200 mm) the sensor can be installed with only a 100 mm insertion depth as alternative method. This allows one sensor to be used for all pipe sizes.

Note: This 100 mm installation depth method requires a setting through the Android app or the service software.

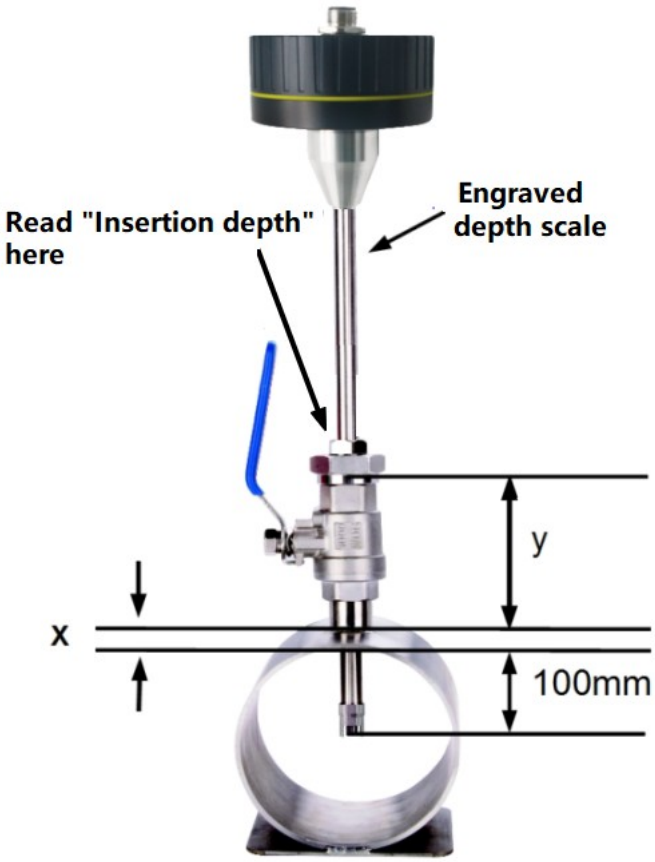

$$\textbf{Insertion depth} = x + y + 100$$

x = wall thickness of pipe

y = length of the ball valve

Calculation example:

A 12”-diameter pipe with the wall thickness of 9 mm

An 87 mm-long ball valve

$x = 9\,\text{mm}\,;\, y = 87\,\text{mm}$

Insertion depth

$= 9\,\text{mm} + 87\,\text{mm} + 100\,\text{mm} = 196\,\text{mm}$

9.2.2 Installing the sensor

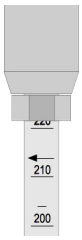

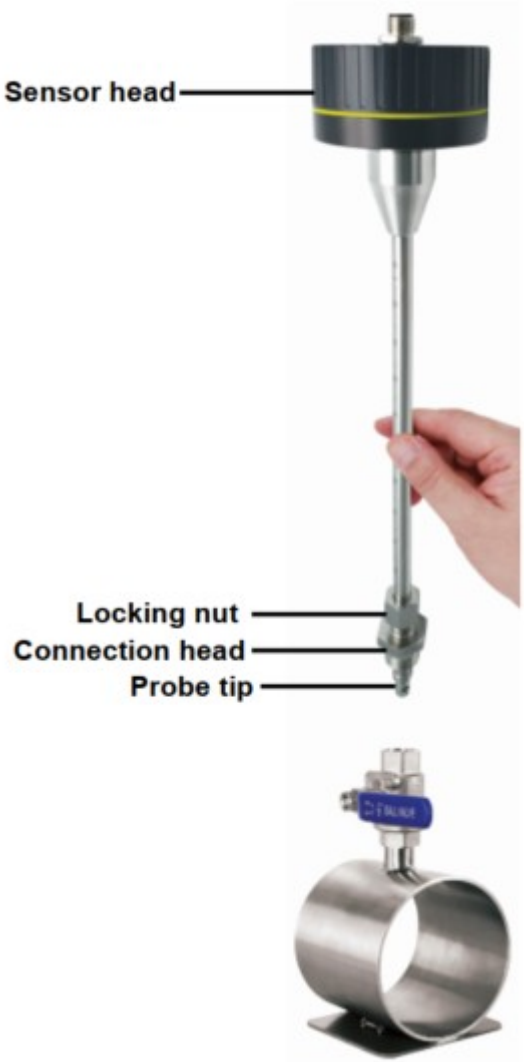

Observe the flow direction indicated on the top of the meter or on the shaft. Make sure it matches the flow direction of the compressed air or gas.

1. Close the ball valve

2. Rotate the connection head to make its connection thread cover the sensor probe tip completely.

3. Underlay the copper gasket sealing ring at the thread of the connector head.

4. Tighten the connection head to the ball valve. During the process, move the shaft to make the arrows shown on the top of the sensor head point to the flow direction in the pipe.

5. Open the ball valve.

6. Move the flow sensor slightly to the calculated insertion depth by means of the scale on the shaft.

7. Tighten the locking nut by hand so that the flow sensor cannot be moved by the pressure in the pipe. **NOTE:** The locking nut is a hex nut with the adjacent edge angle of 60 degrees. See the figure on the next page.

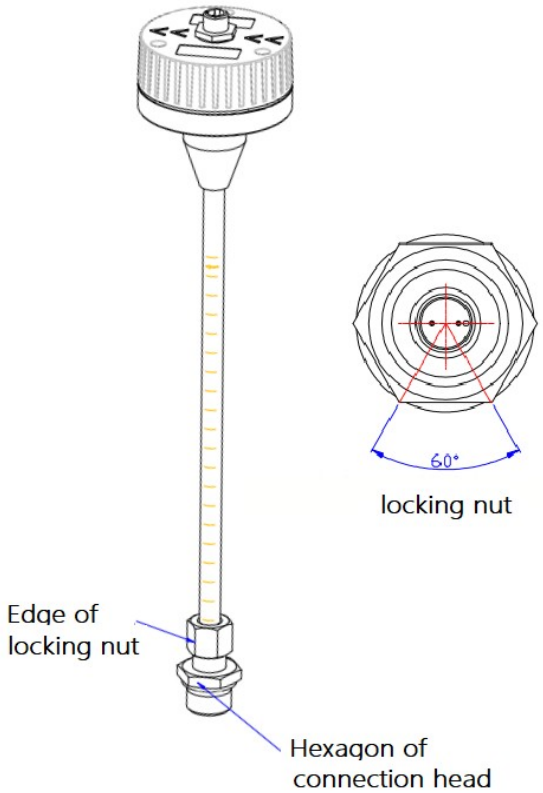

8. Using one edge of the locking nut as a reference, draw a line that is aligned with this edge on the hexagonal surface of the connection head with a pen.

9. Check again to make sure that the actual flow direction is aligned with the arrows on the sensor top. The angle deviation should not be larger than ±2°, as shown below.

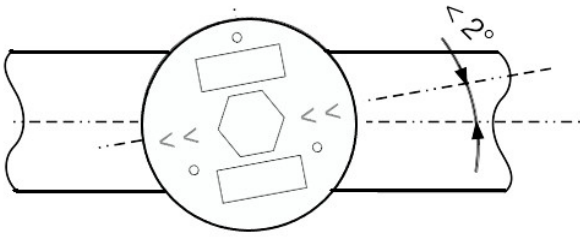

10. Check again and make sure that the installation depth is correct because sometimes the shaft is moved from its original position by the compressed air.

11. Follow the steps below to tighten the locking nut with a wrench:
   A. Fix the connection head with a wrench.
   B. Clamp the locking nut with another wrench. With the line drawn on the hexagonal surface of the connection head as the reference, turn the wrench 120 degrees clockwise.

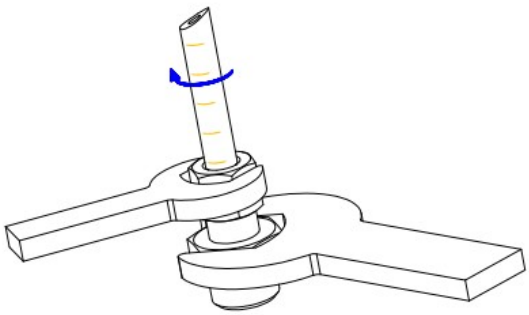

NOTE: If there is still gas leakage after the above steps, use a wrench to continue to turn the locking nut clockwise by 30 degrees.

9.2.3 Removing the sensor

1. Hold the flow sensor.
2. Release the locking nut at the connection thread.
3. Pull out the shaft slowly until the value “10” can be read at the scale.
4. Close the ball valve.
5. Release the connection thread and unscrew the flow sensor.

9.3 Electrical connection

The S402 flow sensor provides an M12 connector, which has 5-pin or 6-pin depending on the output signal type you choose.

Remark:

For the 5-pin M12 version, the delivery package is supplied with a 5-pore M12 connector by default; and for the 6-pin M12 version, the package is supplied with a 5 m cable that has a 6-pore M12 connector molded on one end.

Pin assignment of the 5-pin M12 connector

The 5-pin connector supports one of the following three output types.

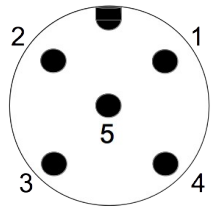

Output type	Pin 1	Pin 2	Pin 3	Pin 4	Pin 5
Modbus (P/N: A1416)	GND	-VB	+VB	D+	D-
Mbus plus 4 … 20 mA (P/N: A1417)	+I	-VB	+VB	MB	MB
Modbus plus 4 ... 20 mA (P/N: A1418)	+VB	D+	-VB	D-	+I
4 ... 20 mA plus Pulse Compatible to S400 (P/N: A1419)	NA	-VB	+VB	+I	+P
Wire colour	brown	white	blue	black	grey

Pin assignment of the 6-pin M12 connector

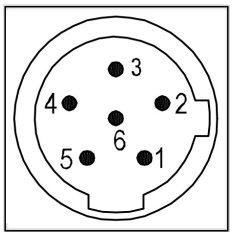

Output type	Pin 1	Pin 2	Pin 3	Pin 4	Pin 5	Pin 6
4 ... 20 mA plus Pulse (P/N: A1415)	-I	-VB	+VB	SW	SW	+I
Wire colour	blue	white	red	yellow	green	black

Legend:

GND:	Ground for Modbus
-VB:	Negative supply voltage
+VB:	Positive supply voltage
+I:	Positive 4 ... 20 mA signal
-I:	Negative 4 ... 20 mA signal
+P:	Pulse output

SW:	Isolated pulse output
D+:	Modbus data +
D-:	Modbus data -
MB:	MBus data
NA:	Not applicable

ATTENTION!

Do not screw the M12 plug using force. Otherwise, it may damage the connecting pins.

10 Sensor signal outputs

10.1 Analog output

The sensor has an analog output range of 4 ... 20 mA. This output can be scaled to match a desired measuring range. Standard scaling is from 0 to max flow. The corresponding flow in different pipe sizes can be found in the Appendix section. For other ranges, please contact the manufacturer.

10.2 Pulse output

The sensor will send out one pulse per consumption unit. This pulse output can be connected to an external pulse counter to count the total consumption. The number of m^3 per second are summed up and indicated after one second. Pulse length depends on flow rate.

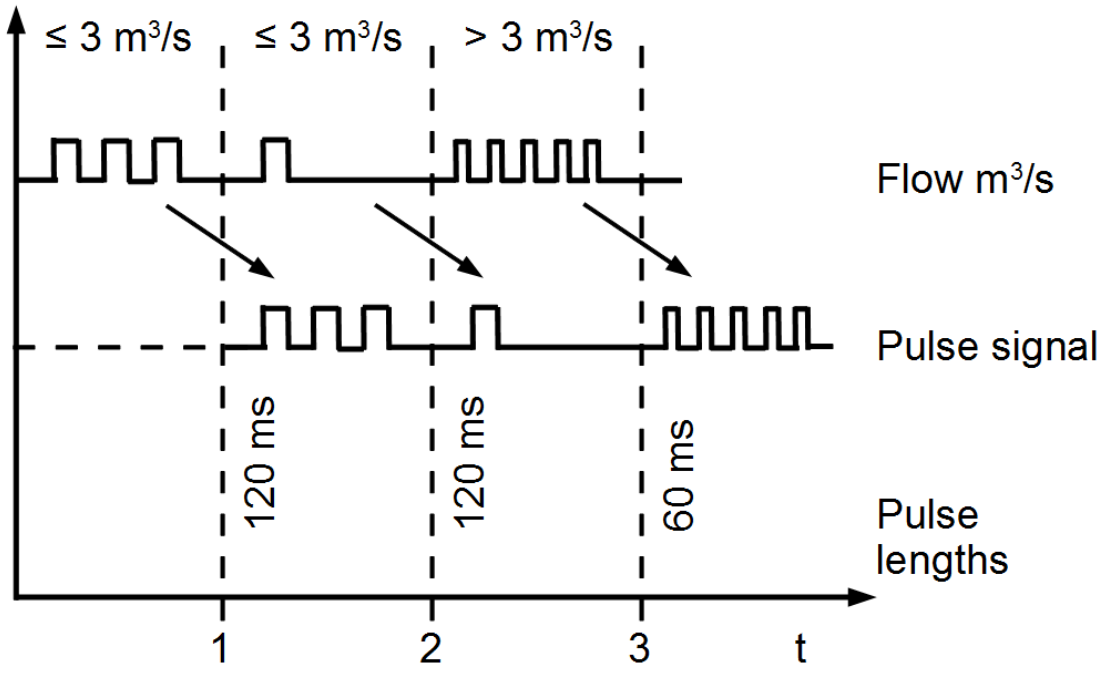

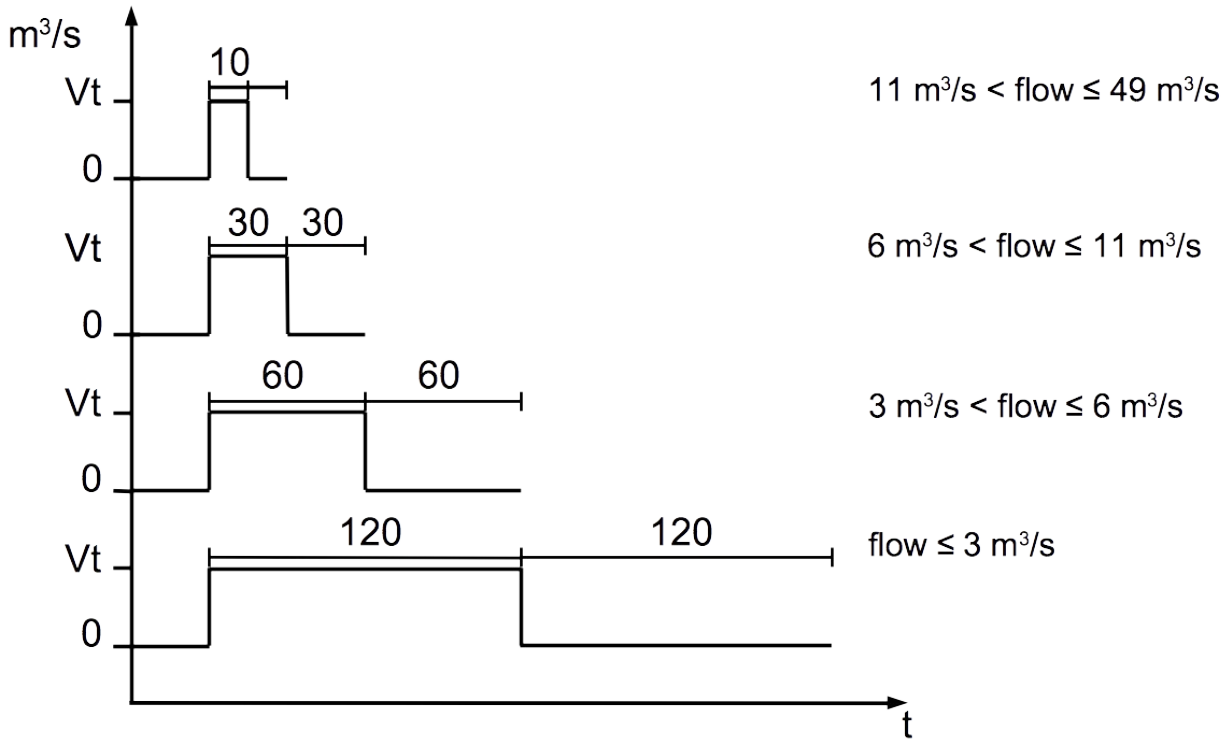

In case that the flow rate is too high and the S402 cannot output pulses with the default settings (one pulse per one consumption unit), use our mobile service app S4C-FS to set the pulse output to 1 pulse per 10 consumption units or 1 pulse per 100 consumption units. For example, when configured with 1 pulse per 10 m^3, the sensor will send one pulse each 10 m^3.

Example (1 pulse per 10 m^3):

Volumetric flow [m^3/s]	**Volumetric flow [m^3/h]**	**Pulse length [ms]**	**Max. pulse output per hour**
≦ 3	≦ 10800	120	1080
> 3	> 10800	60	2880
> 6	> 21600	30	3960

10.2.1 Pulse connection diagram

The pulse connections for 6-pin M12 connector are shown below.

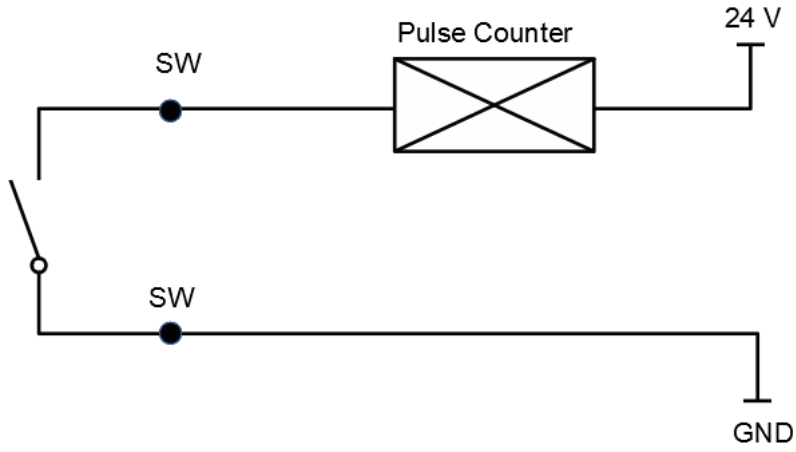

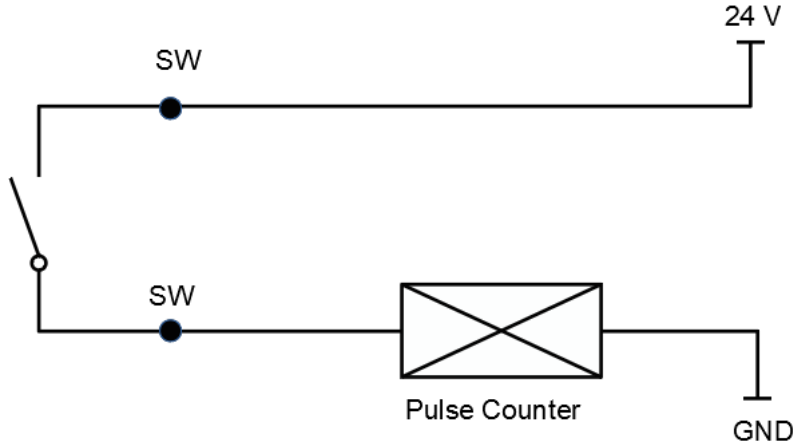

The pulse connection for 5-pin M12 connector is shown below.

10.3 Modbus output

The default Modbus communication settings are shown as below. You can change the default values using Modbus, service software or the S4C-FS service app.

Mode	: RTU
Baud rate	: 19200
Device address	: Last two digits of serial number
Framing / parity / stop bit	: 8, N, 1
Response time	: 1 second
Response delay	: 0 ms
Inter-frame spacing	: 7 char

10.3.1 Modbus settings registers

Modbus Register	Reg Address	No. of Byte	Data Type	Description	Default Setting	Read Write	Unit/Comment
2001	2000	2	UInt16	Modbus ID	1	R/W	Modbus ID 1…247
2002	2001	2	UInt16	Baud rate	4	R/W	0 = 1200 1 = 2400 2 = 4800 3 = 9600 4 = 19200 5 = 38400
2003	2002	2	UInt16	Parity	1	R/W	0 = none 1 = even 2 = odd
2005	2004	2	UInt16	Word Order	0xCDAB	R/W	0xABCD=Big Endian 0xCDAB=Mid Endian

Byte sequencing

Byte order	Byte sequencing (HEX)	Example
MID-LITTLE-ENDIAN (Read from the device)	A B C D	0x 0A 11 42 C5
LITTLE-ENDIAN	B A D C	0x 11 0A C5 42
BIG-ENDIAN	C D A B	0x 42 C5 0A 11

10.3.2 Values registers

Modbus Register	Reg. Address	No. of Byte	Data Type	Description	Read Write
7	6	4	Float	flow(Current unit)	R
9	8	4	UInt32	Consumption(Current unit)	R
1101	1100	4	Float	Flow in m³/h	R
1109	1108	4	Float	Flow in Nm³/h	R
1117	1116	4	Float	Flow in m³/min	R
1125	1124	4	Float	Flow in Nm³/min	R
1133	1132	4	Float	Flow in ltr/h	R
1141	1140	4	Float	Flow in Nltr/h	R
1149	1148	4	Float	Flow in ltr/min	R
1157	1156	4	Float	Flow in Nltr/min	R
1165	1164	4	Float	Flow in ltr/s	R
1173	1172	4	Float	Flow in Nltr/s	R
1181	1180	4	Float	Flow in cfm	R
1189	1188	4	Float	Flow in Ncfm	R
1197	1196	4	Float	Flow in kg/h	R
1205	1204	4	Float	Flow in kg/min	R
1213	1212	4	Float	Flow in kg/s	R
1269	1268	4	UInt32	Consumption in m³	R
1275	1274	4	UInt32	Consumption in Nm³	R
1281	1280	4	UInt32	Consumption in ltr	R
1287	1286	4	UInt32	Consumption in Nltr	R
1293	1292	4	UInt32	Consumption in cf	R
1299	1298	4	UInt32	Consumption in Ncf	R
1305	1304	4	UInt32	Consumption in kg	R
1347	1346	4	Float	Velocity in m/s	R
1355	1354	4	Float	Velocity in Nm/s	R

11 Service App S4C-FS

S4C-FS is an Android-based mobile app that enables you to remotely view online measurements and change settings for SUTO flow meters.

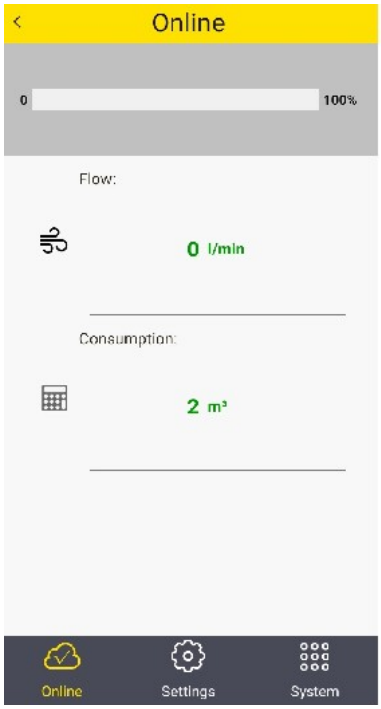

Download S4C-FS from the Google Play Store or SUTO website.

To change settings, you need to scan the QR code on the calibration certificate using the app. This ensures that only authorized users can access the sensor settings.

12 Calibration

The sensor is calibrated ex work. The exact calibration date is printed on the certificate which is supplied together with the sensor. The accuracy of the sensor is regulated by the onsite conditions, and parameters like oil, high humidity or other impurities can affect the calibration and furthermore the accuracy. However we recommend to This ensures that only authorized users can access the sensor settings. calibrate the instrument at least once per year. The calibration is excluded from the instruments warranty. For this please contact the manufacturer.

13 Maintenance

To clean the sensor it is recommended to use distilled water or isopropyl alcohol only.

ATTENTION!

Do not touch the surface of the sensor plate.

Avoid mechanical impact on the sensor (e.g with a sponge or a brush).

If the contamination cannot be removed the sensor must be inspected and maintained by the manufacturer.

14 Disposal or waste

Electronic devices are recyclable material and do not belong in the household waste.
The sensor, the accessories and its packings must be disposed according to your local statutory requirements.
The dispose can also be carried by the manufacturer of the product, for this please contact the manufacturer.

15 Appendix A - Modbus communication example

03 (0x03) Read holding register

Request		Response	
Slave address	1 byte	Slave address	1 byte
Function code	1 byte	Function code	1 byte
Starting address Hi	1 byte	Byte count	1 byte
Starting address Lo	1 byte	Register Hi	1 byte
No. of points Hi	1 byte	Register Lo	1 byte
No. of points Lo	1 byte	:	:
CRC	2 bytes	Register Hi	1 byte
		Register Lo	1 byte
		CRC	2 bytes

05 (0x05) Write single coil

Request		Response	
Slave address	1 byte	Slave address	1 byte
Function code	1 byte	Function code	1 byte
Coil address Hi	1 byte	Coil address Hi	1 byte
Coil address Lo	1 byte	Coil address Lo	1 byte
Data Hi	1 byte	Data Hi	1 byte
Data Lo	1 byte	Data L	1 byte
CRC	2 bytes	CRC	2 bytes

16 (0x10) Write multiple registers

Request		Response	
Slave address	1 byte	Slave address	1 byte
Function code	1 byte	Function code	1 byte
Starting address Hi	1 byte	Starting address Hi	1 byte
Starting address Lo	1 byte	Starting address Lo	1 byte
No. of registers Hi	1 byte	No. of registers Hi	1 byte
No. of registers Lo	1 byte	No. of registers Lo	1 byte
Byte count	1 byte	CRC	2 bytes
Data Hi	1 byte		
Data Lo	1 byte		
:	:		
Data Hi	1 byte		
Data Lo	1 byte		
CRC	2 bytes		

17 (0x11) Report slave ID

Request		Response	
Slave address	1 byte	Slave address	1 byte
Function code	1 byte	Function code	1 byte
CRC	2 bytes	Byte count	1 byte
		Slave ID	2 bytes
		Device run indicator	2 bytes
		Product code	2 bytes
		Product name	20 bytes
		CRC	2 bytes

This device complies with part 15 of the FCC Rules. Operation is subject to the condition that this device does not cause harmful interference (1) this device may not cause harmful interference, and (2) this device must accept any interference received, including interference that may cause undesired operation.
Changes or modifications not expressly approved by the party responsible for compliance could void the user's authority to operate the equipment.
NOTE: This equipment has been tested and found to comply with the limits for a Class B digital device, pursuant to Part 15 of the FCC Rules. These limits are designed to provide reasonable protection against harmful interference in a residential installation. This equipment generates, uses and can radiate radio frequency energy and, if not installed and used in accordance with the instructions, may cause harmful interference to radio communications. However, there is no guarantee that interference will not occur in a particular installation.
If this equipment does cause harmful interference to radio or television reception,
which can be determined by turning the equipment off and on, the user is encouraged to try to correct the interference by one or more of the following measures:
-- Reorient or relocate the receiving antenna.
-- Increase the separation between the equipment and receiver.
-- Connect the equipment into an outlet on a circuit different
from that to which the receiver is connected.
-- Consult the dealer or an experienced radio/TV technician for help.
To maintain compliance with FCC's & IC's RF Exposure guidelines, this equipment should be installed and operated with a minimum separation distance of 20cm from a person's body. Use only the supplied antenna.
FCC ID: 2ASK2-SUTO-005

SUTO iTEC GmbH

Grißheimer Weg 21
D-79423 Heitersheim
Germany

Tel: +49 (0) 7634 50488 00
Fax: +49 (0) 7634 504 88 19
Email: sales@suto-itec.com
Website: http://www.suto-itec.com

SUTO iTEC (ASIA) Co., Ltd.

Room 10, 6/F, Block B, Cambridge Plaza
188 San Wan Road, Sheung Shui, N.T.
Hong Kong

Tel: +852 2328 9782
Fax: +852 2671 3863
Email: sales@suto-itec.asia
Website: http://www.suto-itec.com

All rights reserved ©

Modifications and errors reserved
S402_im_en_2020-3