English

Instruction and Operation Manual

S431 OEM

Pitot Tube Compressor Flow Meter (Inline)

Dear Customer,

Thank you for choosing our product.

Before starting up the device please read this manual in full and carefully observe the instructions stated. The manufacturer cannot be held liable for any damage which occurs as a result of non-observance or non-compliance with this manual.

Should the device be tampered with in any manner other than a procedure which is described and specified in the manual, the warranty is void and the manufacturer is exempt from liability.

The device is designed exclusively for the described application.

SUTO offers no guarantee for suitability for any other purpose. SUTO is also not liable for consequential damage that results from the delivery, capability, or use of this device.

Table of contents

1 Safety instructions....4
2 Registered trademarks....6
3 Application....7
4 Features....7
5 Technical data....8
5.1 General data....8
5.2 Signal / Interface and Supply....9
5.3 General data....9
5.4 Flow ranges....11
6 Dimensional drawing....12
7 Installation....13
7.1 Installation Options....13
7.2 Inlet and utlet sections 13
7.3 Welding Nipple and Welding Fixture....15
7.4 Removing the sensor 18
7.5 Performing the electrical connection....19
8 Configuration....20
8.1 Registering....20
8.2 Using Service App S4C-FS....21
8.2.1 Flow Settings....22
8.2.2 Unit Settings....23
8.2.3 Calibration....24
8.2.4 Uploading Settings....25
8.2.5 Downloading Settings....25
9 Signal outputs....26
9.1 Analog output....26
9.2 Pulse output....26
9.2.1 Pulse connection diagram....28
9.3 Modbus output 29
10 Maintenance....31
11 Disposal or waste....31

1 Safety instructions

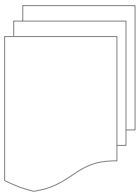

Please check if this instruction manual matches the product type.

Please observe all notes and instructions indicated in this manual. It contains essential information that must be observed before and during installation, operation, and maintenance. Therefore this instruction manual must be read carefully by the technician and by the responsible user / qualified personnel.

This instruction manual must be available at the operation site of the flow sensor at any time. In case of any obscurities or questions regarding this manual or the product, please contact the manufacturer.

WARNING!

Compressed air!

Any contact with quickly escaping air or bursting parts of the compressed air system can lead to serious injuries or even death!

- Do not exceed the maximum permitted pressure range (see sensors label).
- Only use pressure-tight installation material.
- Avoid that persons get hit by escaping air or bursting parts of the instrument.
- The system must be pressureless during maintenance work.

WARNING!

Voltage used for supply!

Any contact with energized parts of the product might lead to an electrical shock which can lead to serious injuries or even death!

- Consider all regulations for electrical installations.
- The system must be disconnected from any power supply during maintenance work.
- Any electrical work on the system is only allowed by authorized qualified personal.

ATTENTION!

Permitted operating parameters!

Observe the permitted operating parameters, any operation exceeding this parameters can lead to malfunctions and might lead to damage on the instrument or the system.

- Do not exceed the permitted operating parameters.
- Make sure that the product is operated in its permitted limitations.
- Do not exceed or undercut the permitted storage and operating temperature and pressure.
- The product should be maintained and calibrated frequently, at least annually.

General safety instructions

- It is not allowed to use the product in explosive areas.
- Please observe the national regulations before/during installation and operation.

Remarks

- It is not allowed to disassemble the product.
- Always use a spanner to mount the product properly.

ATTENTION!

Measurement values can be affected by malfunction!

The product must be installed properly and frequently maintained. Otherwise it might lead to wrong measurement values, which can lead to wrong results.

- Always observe the direction of the flow when installing the sensor. The flow direction is indicated on the housing.
- Do not exceed the maximum operating temperature at the sensor tip.
- Avoid condensation on the sensor element because it will affect the accuracy enormously.

Storage and transportation

- Make sure that the transportation temperature of the sensor is between -30°C ... +70°C.
- For transportation it is recommended to use the packaging which comes with the sensor.
- Please make sure that the storage temperature of the sensor is between -30 ... +70°C.
- Avoid direct UV and solar radiation during storage.
- For the storage, the humidity must be <95% with no condensation.

2 Registered trademarks

Trademark	Trademark owner
SUTO®	SUTO iTEC
MODBUS®	Modbus Organization, Hopkinton, USA
Android™, Google Play	Google LLC

3 Application

The S431 OEM Pitot Tube Compressor Flow Meter (Inline) is designed to measure the air delivery of a compressor. It can be installed at the discharge side inside the compressor where wet and contaminated air occurs.

The S431 can measure the following parameters for compressed air or gases:

Parameter	Default unit
Actual velocity	m/s
Volumetric flow	m^3/h
Pressure	bar
Total consumption	m^3
Temperature	°C

4 Features

- Flow and consumption measurement in wet or high mass flow or velocity applications.
- Measurement at the compressor outlet.
- Installation on welding nipple with thread connection.
- No straight pipe requirements.
- Robust design for harsh environment: ambient temperatures up to 90 °C, vibration proofed.
- No mechanical wear parts.
- One sensor for DN50 ... DN900.
- Auto-calibration: sensor adjust itself regularly.
- User calibration through mobile App at compressor test stand.
- Analogue and pulse output or Modbus/RTU.

5 Technical data

5.1 General data

CE	
Flow	
Accuracy *	1.5% of reading ±0.3% FS
Selectable units Volumetric Flow: Mass Flow: Actual Velocity:	 m³/h, m³/min, l/min, l/s, cfm kg/h, kg/min, kg/s, t/h, lb/h m/s, ft/min
Measuring range	See the table in section 5.4.
Repeatability	0.5 % of reading
Sensor	Differential pressure sensor with pitot tube
Sampling rate	3/sec
Turndown ratio	10:1
Response time (t_{90})	2 sec
Consumption	
Selectable units	m³, ft3, t, lb, l, kg
Pressure	
Accuracy	0.5 % FS
Selectable units	bar, psi, kPa, MPa
Measuring range	0 ... 16 bar(g)
Sensor	Piezzo resistive sensor
Temperature	
Accuracy	0.5 °C
Selectable units	°C, °F
Measuring range	-40 ... +230 °C
Sensor	Pt1000
Reference conditions	
Selectable conditions	20 °C 1000 mbar (ISO1217) 0 °C 1013 mbar (DIN1343) freely adjustable

5.2 Signal / Interface and Supply

Analog output	
Signal	4 ... 20 mA, isolated
Scaling	0 ... max flow
Load	250R
Update rate	1/sec
Pulse output	
Signal	Max 30 V, 200 mA
Scaling	1 pulse per consumption unit
Fieldbus	
Protocol	Modbus/RTU
Supply	
Voltage supply	21 ... 27 VDC
Current consumption	150 mA (1.5 A peaks for 3 sec)

5.3 General data

Configuration	
Wireless	S4C-FS App for mobile phones
Material	
Housing	PC + ABS
Wetted parts	Stainless steel 1.4404 (SUS 316L)
Miscellaneous	
Electrical connection	1 x M12 (6-pole)
Protection class	IP65
Approvals	CE, RoHS, FCC
Process connection	M32 x 1.5 mm, with SW36 wrench to fasten the nut
Weight	1.4 kg
Operating conditions	
Medium	Wet/dry air, other gases
Medium quality	Non corrosive
Medium temperature	-20 ... +120 °C
Medium humidity	No requirements

Operating pressure	0 ... 16 bar(g)
Ambient temperature	-20 ... +90 °C
Ambient humidity	<95 % rH
Storage temperature	-30 ... 70 °C
Transport temperature	-10 ... 70 °C
Pipe sizes	>=DN50

* The specified accuracy is valid only within the minimum and maximum flows that are indicated in section 5.4.

5.4 Flow ranges

The stated measuring ranges under following conditions:

- Standard flow in air
- Reference pressure: 1000 mbar
- Reference Temperature: +20 °C

Tube		Volumetric Flow					
		m³/h		m³/min		cfm	
Inch	mm	Min	Max	Min	Max	Min	Max
2″	53.1	130	1,298	2.16	21.6	76	764
2½″	68.9	227	2,274	3.79	37.9	134	1,338
3″	80.9	318	3,175	5.29	52.9	187	1,869
4″	100	488	4,880	8.13	81.3	287	2,872
5″	125	763	7,625	12.71	127.1	449	4,488
6″	150	1,099	10,993	18.32	183.2	647	6,470
8″	200	1,961	19,611	32.69	326.9	1,154	11,543
10″	250	3,064	30,642	50.07	510.7	1,804	18,035
12″	300	4,412	44,125	73.54	735.4	2,597	25,971

Remark:

- Flow range for Air at 6 bar(g), 50 °C and 90% humidity.
- The flow measurement range is related to the actual inner diameter of the installed pipe. Differences in the inner diameter will result in different maximum and minimum flow values. The exact range can be calculated using Flow Range software, which can be downloaded from www.suto-itec.com.
- To fast access the tool download page, enter "flowrange" (without spaces) in the search field, and then click the search result.

6 Dimensional drawing

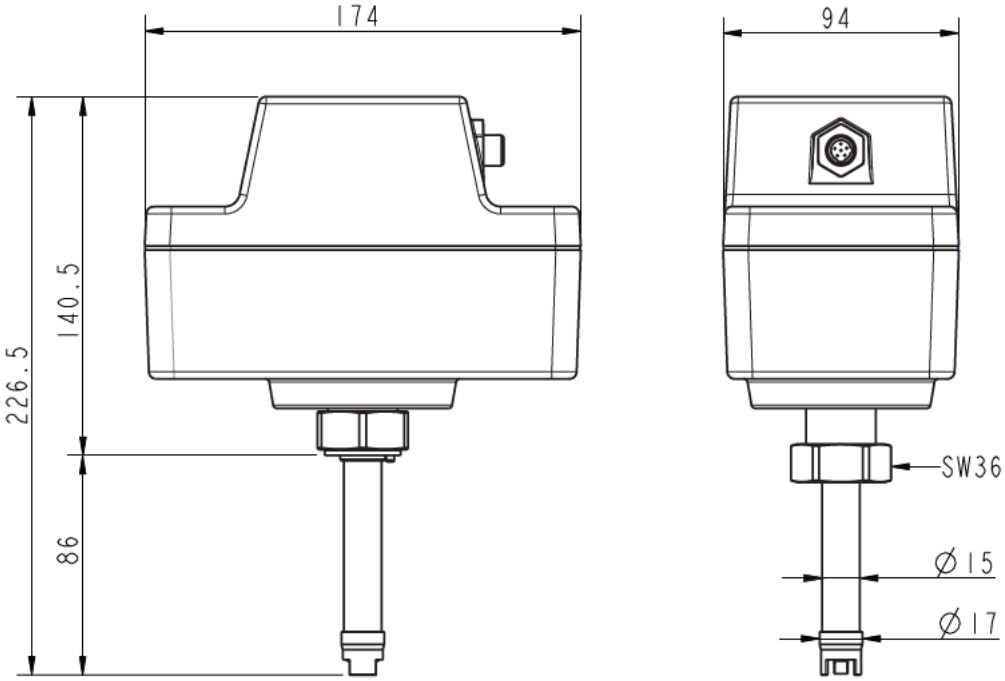

7 Installation

Before you install the sensor, make sure that all components listed below are included in your package.

Qty	Description	Order No.
1	S431 OEM Pitot Tube Compressor Flow Meter (Inline)	Horizontal pipes: S695 4310 Option reverse flow direction: A4319 Vertical pipes: S695 4311
1	Output option Analog / Pulse Modbus/RTU	 A4314 A4315
1	O-ring	NA
1	M12 cable 5 m with open ends	A553 0144
1	Instruction manual	NA
1	Calibration certificate	NA

Remark:

For the various installations welding nipples are available and need to be ordered separately.

7.1 Installation Options

There are 2 installation options:

- Installation inside compressors
  This installation requires a calibration of the S431 together with the compressor in the compressor maker's test stand.
- Installation outside compressors
  This installation requires a straight pipe of a certain length. For the straight pipe requirements, see the section 7.2.

7.2 Inlet and utlet sections

Unhindered flow characteristics are achieved if the section in front of the sensor (inlet) and behind the sensor (outlet) are sufficiently long, absolutely straight, and free of obstructions such as edges, seams, curves, and so on.

Make sure that enough space exists at your site for an adequate installation as described in this manual.

ATTENTION!

The wrong measurement might occur if the sensor is not installed correctly.

- Pay careful attention to the design of the inlet and outlet sections. Obstructions can cause counter-flow turbulence as well as turbulence in the direction of the flow.
- The sensor is for indoor use only! At an outdoor installation, the sensor must be protected from solar radiation and rain.

Remark: If there is any combination of the following situations, the longest straight inlet section must be maintained.

Expansion

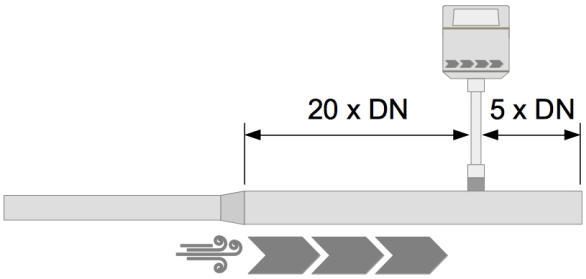

Reduction

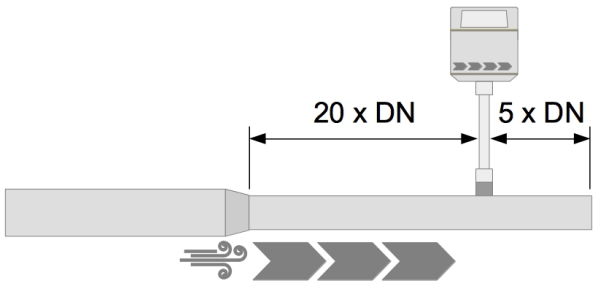

90° Bend

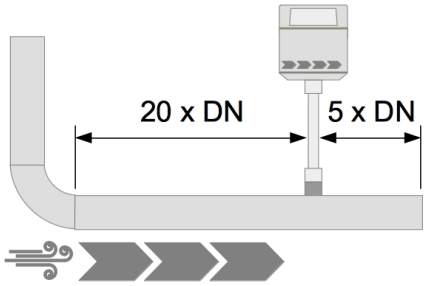

2×90° Bend

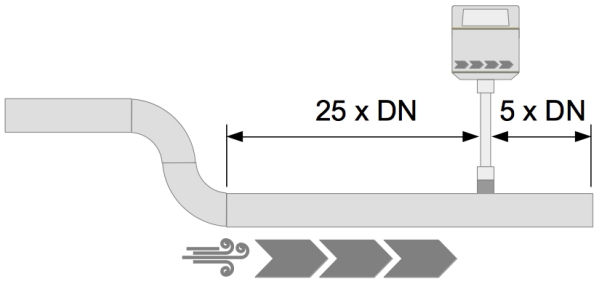

Three dimensional Bend

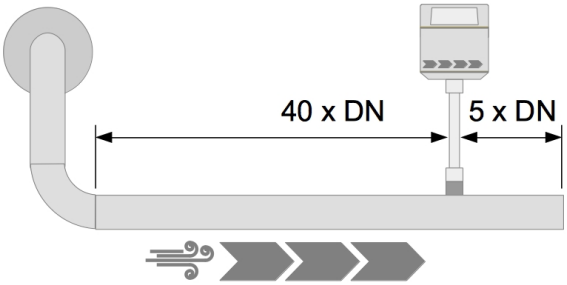

T-piece

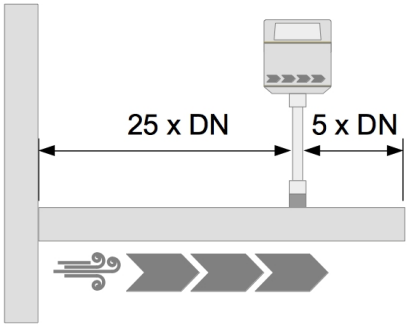

Shut-off valve

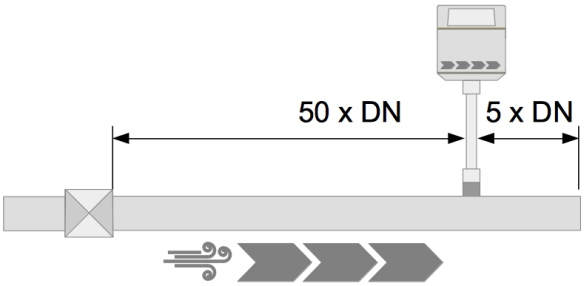

Filter or similar (unknown objects)

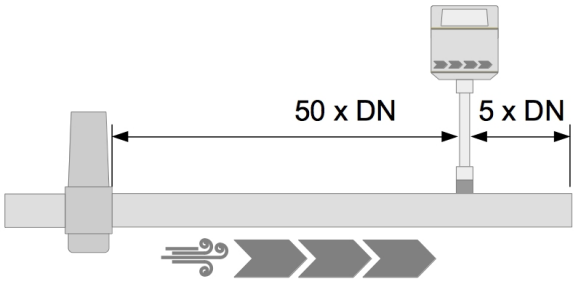

7.3 Welding Nipple and Welding Fixture

In order to install the sensor, first a hole must be made as follows:

- The diameter of the hole is 18 mm for the installation in a horizontal pipe.
- The diameter of the hole is 21 mm for the installation in a vertical pipe.

Then a welding nipple will be welded onto the pipe. There are 4 types available:

Order No.	Description
A4310	Welding nipple DN50 ... DN80 for horizontal pipes installation
A4311	Welding nipple DN100 ... DN900 for horizontal pipes installation
A4312	Welding nipple DN50 ... DN80 for vertical pipes installation
A4313	Welding nipple DN100 ... DN900 for vertical pipes installation

Horizontal pipe installation - S695 4310

S4695 4310 horizontal pipe installation

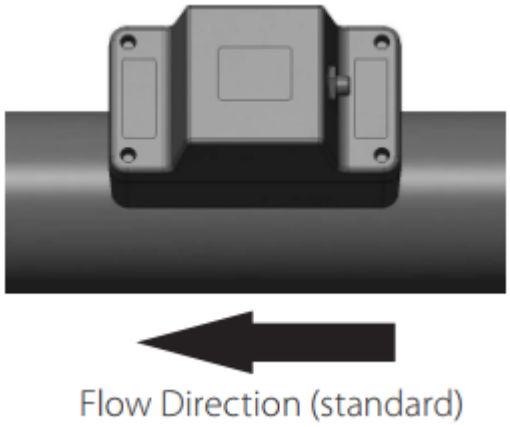

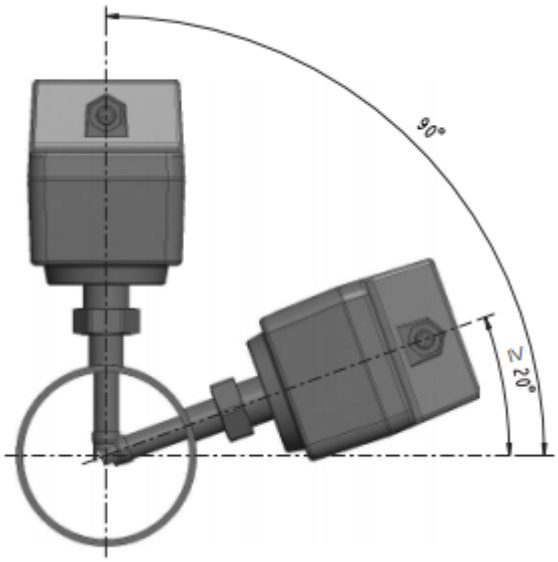

Horizontal pipe installation - A4319

A4319 Horizontal pipe installation option

Valid installation angle from 20 ... 90º

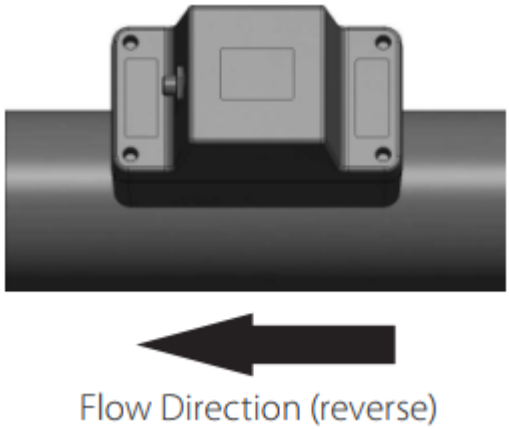

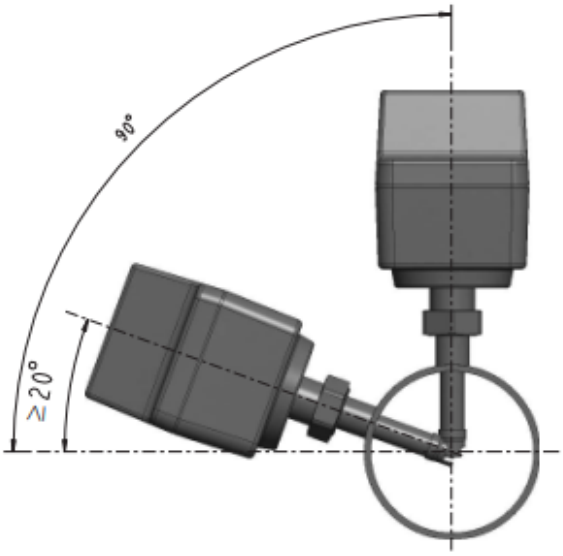

Vertical pipe installation - S695 4311

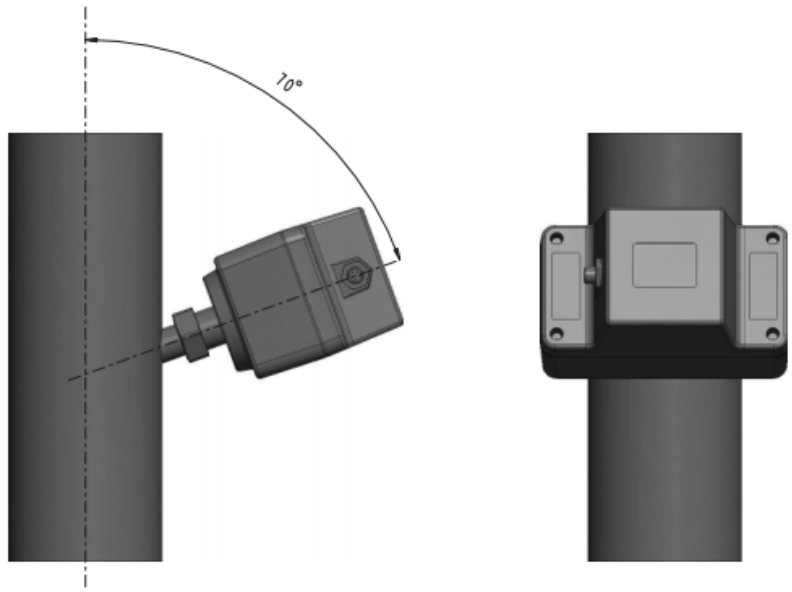

In addition, you also can use the customized welding fixture for welding processing to get the best positioning and welding quality, as shown below.

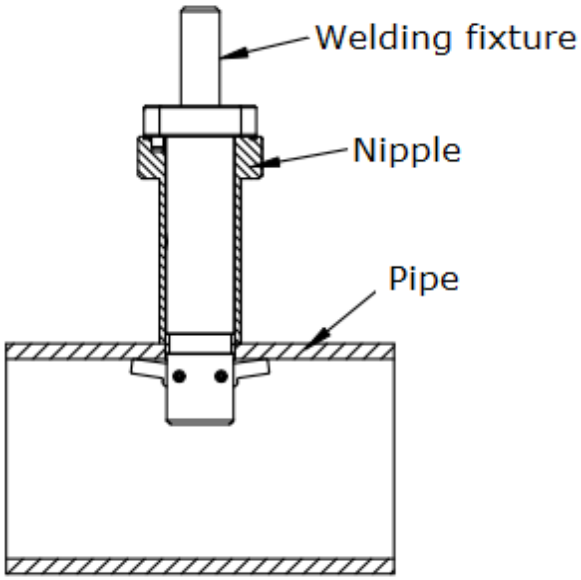

Welding fixture in a horizontal pipe

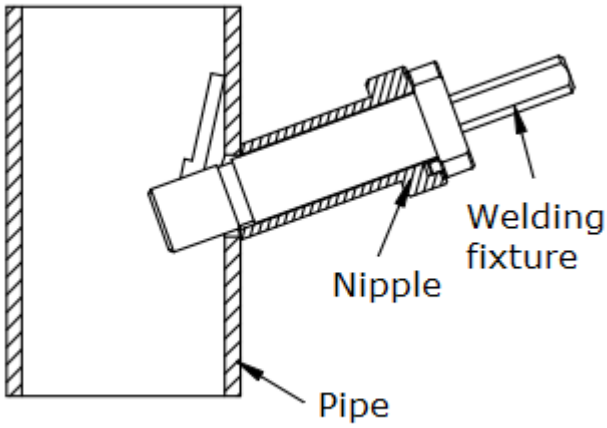

Welding fixture in a vertical pipe

The types of the welding fixtures and their order numbers are as follows:

Order No.	Description
A695 4310	Welding fixture DN50 ... DN80 for horizontal pipe installation
A695 4311	Welding fixture DN100 ... DN900 for horizontal pipe installation
A695 4312	Welding fixture DN50 ... DN80 for vertical pipe installation
A695 4313	Welding fixture DN100 ... DN900 for vertical pipe installation

7.4 Removing the sensor

WARNING!

Removing sensors under pressure can be dangerous! Be aware that the sensor can be shot out of the ball valve if you do not carefully follow the steps described below!

For your information: The sensor is exposed to a force of 18 kg at the 8-bar(g) system pressure; a force of 32 kg at 16-bar(g) system pressure!! Hold the sensor very tight when releasing the clamp sleeve.

Follow the steps below to remove the sensor:

1. Hold the flow sensor.
2. Release the connection nut at the connection thread.
3. Pull out the shaft slowly.
4. The measuring section can be closed with the optional closing cap so that the system can operate normally during maintenance of the sensor.

Follow the steps below to re-install the sensor after maintenance:

1. Place the O-ring into the recess of the connection nut.
2. Insert the sensor back to the pipe.
3. Tighten the connection nut.

7.5 Performing the electrical connection

The S431 has a 6-pole M12 connector for power supply and signal output.

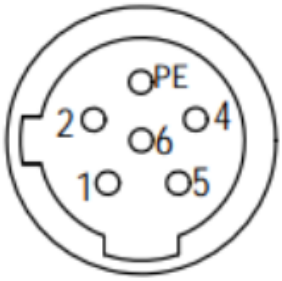

6-pole M12 cable with open ends included

Female (View from front)

Pin assignment connector plug M12 (6-pole)

Output	Pin 1	Pin 2	Pin 3	Pin 4	Pin 5	Pin 6
Analog	-Iisolated	-VB	+VB	SW	SW	+Iisolated
Modbus	GNDM	-VB	+VB	D+	D-	N/A
Wire color	Blue	White	Red	Yellow	Green	Black

Legend for pin assignment

GNDM	Ground for Modbus/RTU
-VB	Negative supply voltage
+VB	Positive supply voltage
+Iisolated	Positive 4 … 20 mA signal (isolated)
-Iisolated	Negative 4 ... 20 mA signal (isolated)
SW	Isolated pulse output (switch)
D+	Modbus/RTU data +
D-	Modbus/RTU data -
N/A	Not applicable

ATTENTION!

Do not screw the M12 connector using force. Otherwise it might damage the connection pins.

8 Configuration

After you completed the sensor installation, you can change the sensor settings as needed, using the Service App S4C-FS.

Search and installation of the S4C-FS are as follows:

1. On your Android device, download the **S4C-FS** app from Google Play Store or from the SUTO website.
2. Install **S4C-FS**.

8.1 Registering

Before using the S4C-FS App, you must register. Only registered users are able to modify settings. Please get in touch with our service teams and provide the required registration information.

8.2 Using Service App S4C-FS

The S4C-FS is an Android and iOS App that enables you to view measurement readings, change settings and perform calibrations on the S431.

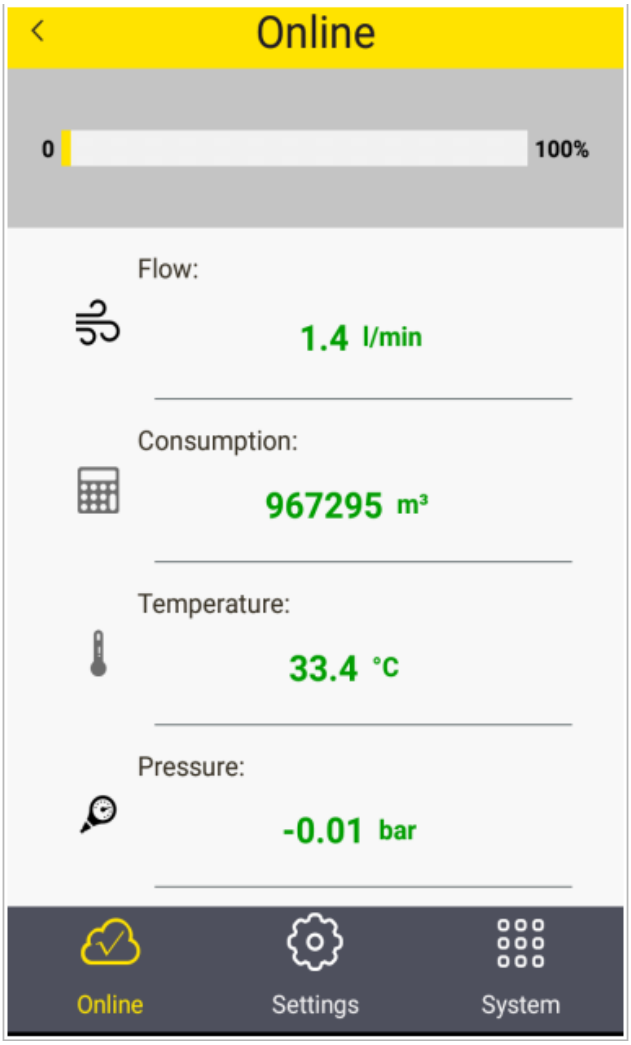

Preparation:
Power on the S431.
As a registered user you can access the sensor through a wireless connection immediately.
If you are not a registered user you need to scan the QR code on the calibration certificate.

Scan QR Code:
In the **System** menu select **Scan QR Code**.

After scanning the QR code signal icon changes from **Orange** to **Green.**

After finishing this step you can return to the online screen and see online values.

8.2.1 Flow Settings

Before any measurement can be done the flow settings need to be entered.

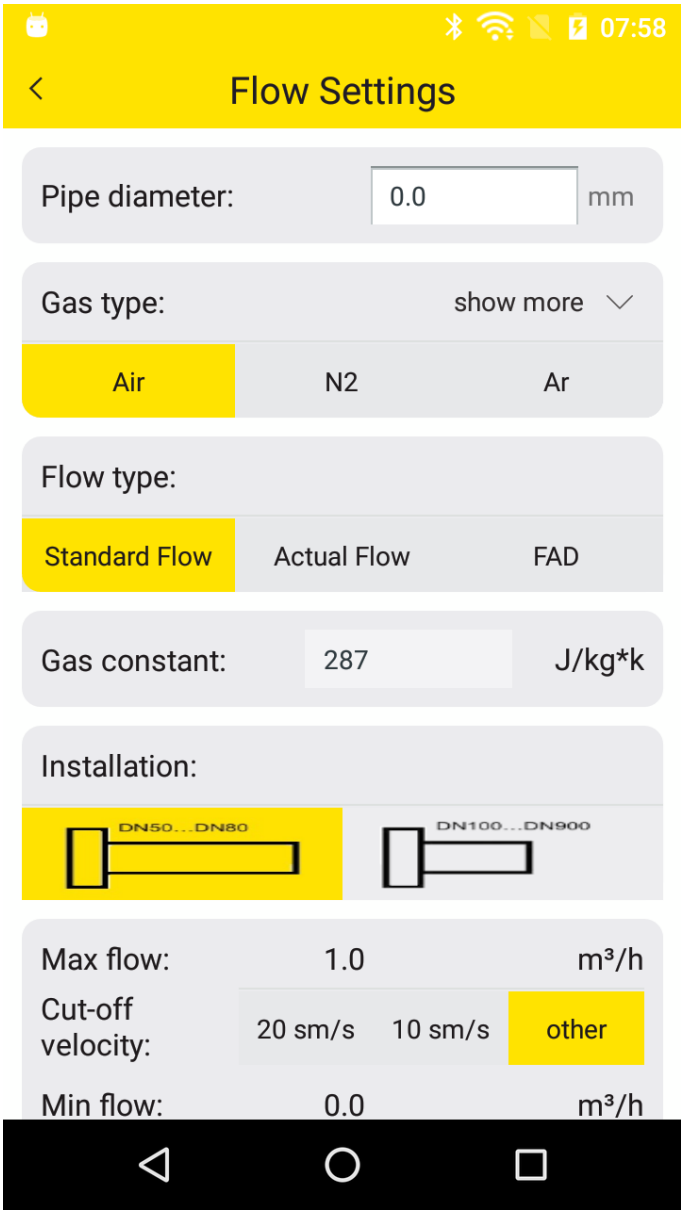

Pipe diameter
Enter the inner diameter of the pipe.

Gas type
Select the medium to measure.

Flow Type
Select Standard flow, Actual Flow or FAD (Free Air Delivery).

Gas constant
It is set through the selected gas type. Each gas type has its own specific gas constants. When the gas type is “other”, you have to input a gas constant.

Installation
You have to select the insertion depth of either 25 mm (DN50 … DN80) or 50 mm (>DN100).

Cut-Off velocity
Select between 20 or 10 m/s (standard velocity). The velocity values below this setting appear as zero.

8.2.2 Unit Settings

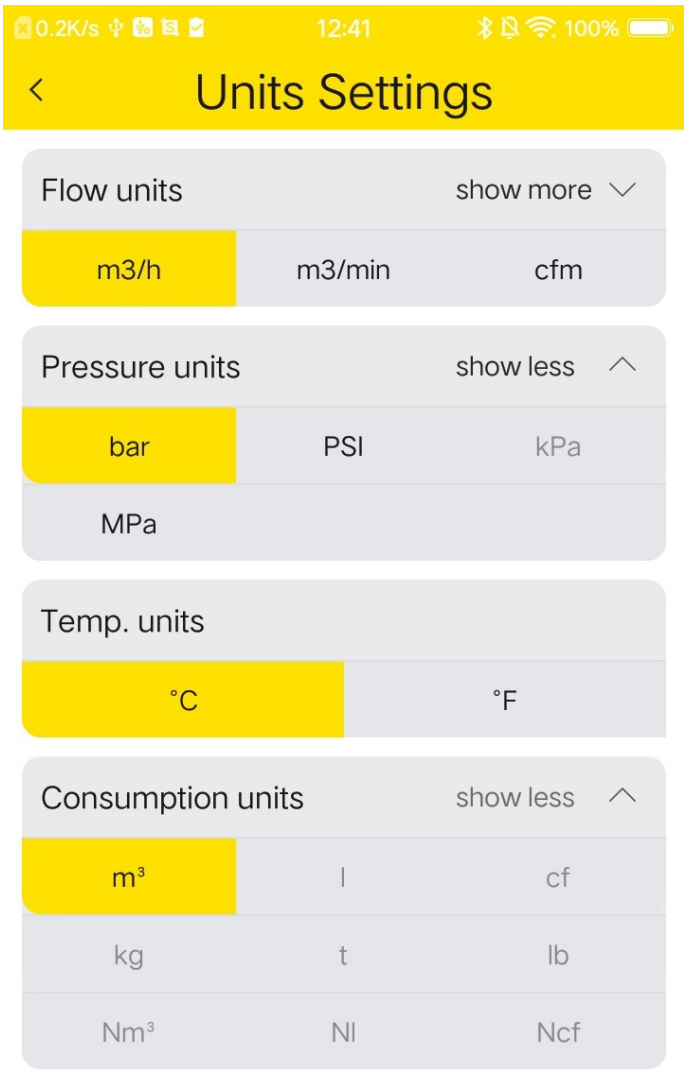

Select the desired physical unit for the different measurement channels.

8.2.3 Calibration

The sensor received a basic factory calibration however due to the various installation conditions it’s required to perform a sensor calibration in the compressor test stand, where the air delivery according to ISO 1217. The steps of calibration are as follows:

1. Launch **S4C-FS**, and select **Settings** > **User Calibration**.
2. Follow the onscreen instructions to perform the flow calibration.

Below is the GUI of the mobile app for the calibration page:

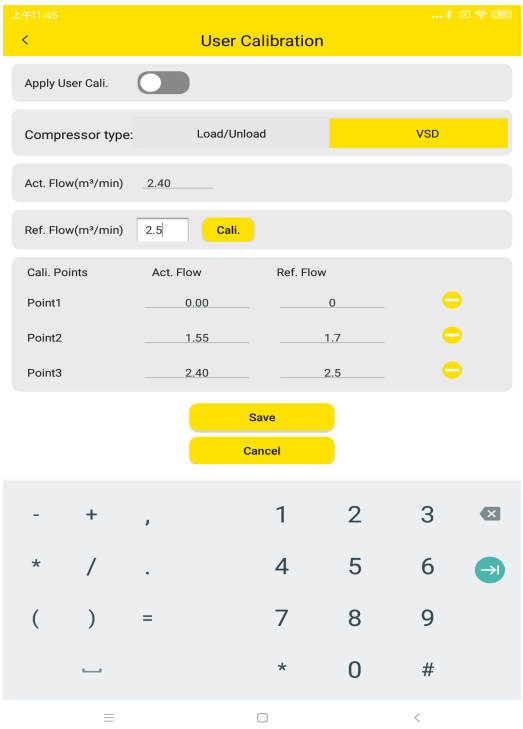

Apply User Calibration
Needs to be activated to perform the calibration.

Compressor type
Select Load/Unload or VSD.
For Load/Unload types, the calibration is offered at full load (1 point). For VSD compressors there are up to 5 calibration points available. It's recommended to select them over the range of 10%...100%. In general 3 points should be sufficient (10%, 50%, 90%).

Act. Flow
This is the flow without the user calibration as it is measured.

Ref. Flow
Manufacturer enters the flow measured by the calibration stand in the factory.

Calibration points are sorted and user can delete any of the calibration points.

It is recommended that the S431 is calibrated once a year. The easiest way is to replace the unit with another sensor that has been newly calibrated. Since the compressor specific settings have been stored in a cloud database, the operator can download the settings of the replaced sensor into the replacement sensor through the mobile app. The replaced sensor can be return to a SUTO service facility for re-calibration and maintenance.

8.2.4 Uploading Settings

Flow meter settings can be saved in the cloud server for a later access in case the S431 need to be replaced in a service case. It is recommended to use this function especially when S431 has been tested and calibrated together with the compressor in the factory or on the site before a flow meter exchange.

8.2.5 Downloading Settings

In case S431 has to be replaced, the settings of the previous installed S431 can be downloaded into the replacement unit. This is a convenient way to ensure the sames settings. User will be asked to enter the serial number of the previous S431. In case the settings can be found on the cloud server it will be downloaded into the new sensor unit.

9 Signal outputs

9.1 Analog output

The S431 can provide an analogue output with the range of 4...20 mA. This output can be scaled to match a desired measuring range. The standard range is the range from 0 to max.

9.2 Pulse output

The S431 sends out one pulse per a consumption unit by default. This pulse output can be connected to an external pulse counter to count the total consumption. The number of m^3 per second are accumulated and indicated after one second. The pulse length depends on consumption rate.

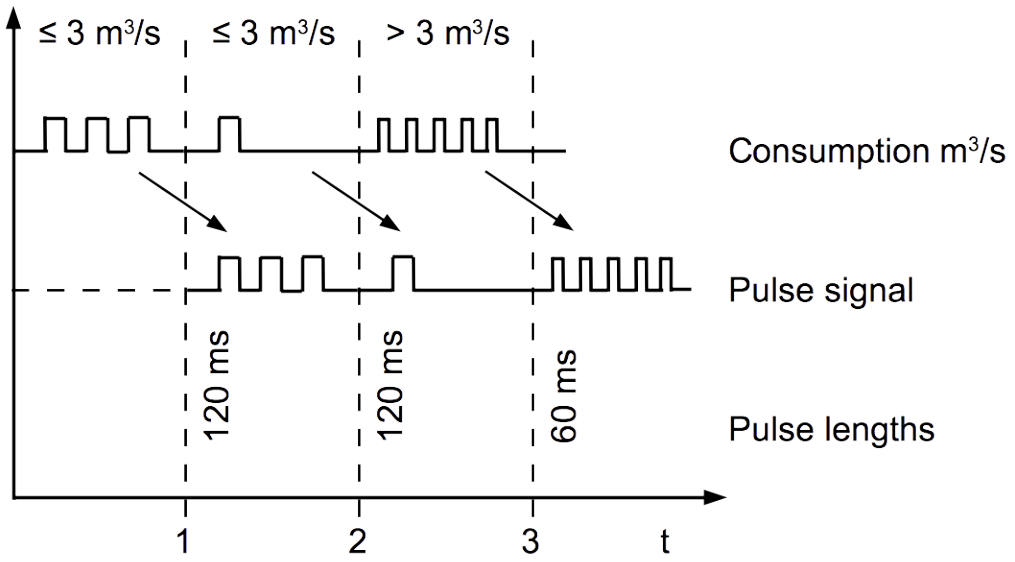

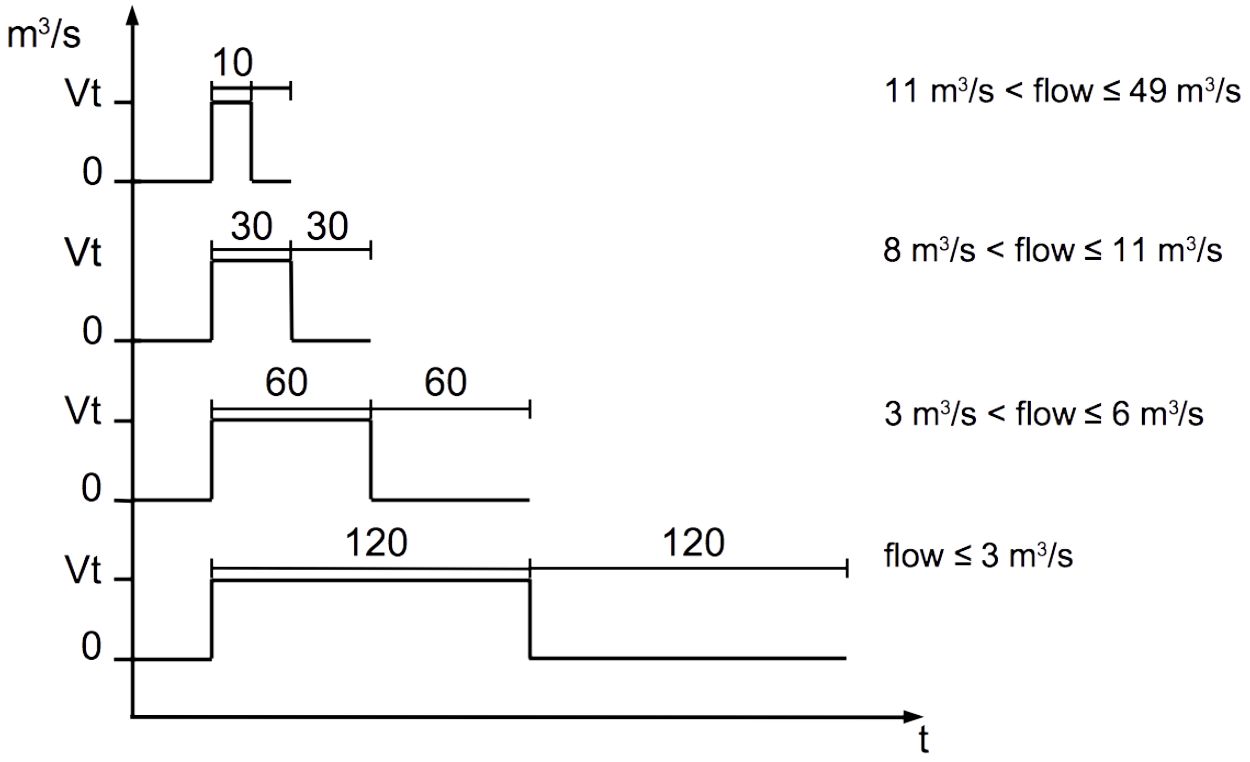

If the flow is higher than 50 m^3/s, l/s of ft^3/s, the S431 cannot output the pulses with default settings (one pulse per a consumption unit).

In this case, you can set the pulse to 1 pulse per 10 consumption units or 1 pulse per 100 consumption units using by the S4C-FS service app or a connected display.

For example, with the setting of 1 pulse per 10 m^3, the S431 sends one pulse each 10 m^3.

Example:

Volume flow [m^3/h]	**Pulse length [ms]**	**Max. consumption [m^3]**
≦ 10,800	120	10,800
> 10,800	60	28,800
> 28,800	30	57,600

9.2.1 Pulse connection diagram

Using the isolated pulse switch (M12 connector: Pin4 and Pin5)

Variant 1:

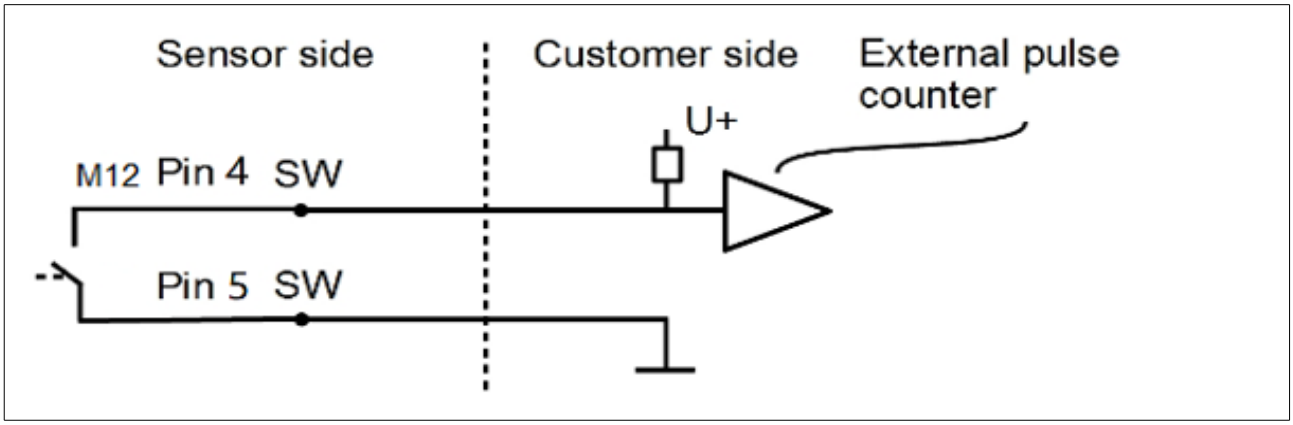

Variant 2:

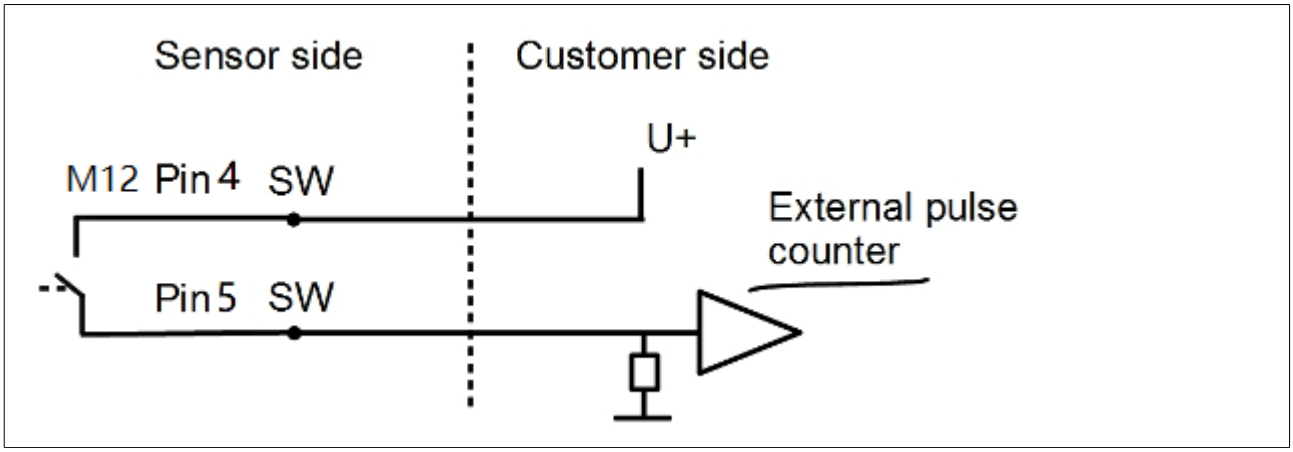

9.3 Modbus output

Communication parameters (Modbus/RTU)

Baud rate	:	19,200
Device address	:	Last digits of serial number
Framing / parity / stop bit	:	8, N, 1
Response time	:	1 second
Response delay	:	0 ms
Inter-frame spacing	:	7 char

Remarks: The Modbus output settings can be changed using S4C-FS Android App or the optional sensor display.

Holding register (Modbus/RTU)

Channel description	Resolution	Format	Length	Register address
Medium temperature	0.1	FLOAT	4-Byte	0
Medium pressure	0.010	FLOAT	4-Byte	2
Actual velocity	0.1	FLOAT	4-Byte	4
Flow	0.1	FLOAT	4-Byte	6
Consumption	1.0	UNIT32	4-Byte	8
System status	N/A	UINT32	4-Byte	24

Remark: The physical units are configurable using the service App S4C-FS or the optional sensor display.

Response message

In the response message that the device returns to the master:

- Function code: 03
- Byte order (32-bit data): MID-LITTLE-ENDIAN.
- To properly decode the 4-byte float and unsigned integer data in the response message, the master must change the byte order from the MID-LITTLE-ENDIAN received to the order that it is using (LITTLE-ENDIAN or BIG-ENDIAN).

Byte sequencing

Byte order	Byte sequencing (HEX)	Example
MID-LITTLE-ENDIAN (Read from the device)	A B C D	0x 0A 11 42 C5
LITTLE-ENDIAN	B A D C	0x 11 0A C5 42
BIG-ENDIAN	C D A B	0x 42 C5 0A 11

System status

The device provides the device statuses via Modbus as well. The 32-bit data information is read as single bit. The meanings of these bits are described as follows.

Bit	Description
2	Measurement over range
3	Temperature over range
4	Pressure over range
5	Pulse over range
6	Calibration overdue
8	Differential pressure sensor broken

Bit	Description
9	Pressure sensor broken
10	Temperature sensor broken
11	NTC broken
15	Flow direction 0: standard 1: reversed
16	BT module connected

10 Maintenance

To clean the sensor it is recommended to use distilled water or isopropyl alcohol only. If the contamination can not be removed, you must send the sensor to the manufacturer for inspection and manufacturer.

11 Disposal or waste

Electronic devices are recyclable material and do not belong in the household waste.
The device, the accessories and its packings must be disposed according to your local statutory requirements.
The dispose can also be carried by the manufacturer of the product. Please contact the manufacturer for details.

FCC WARNING
This device complies with part 15 of the FCC Rules. Operation is subject to the following two conditions: (1) this device may not cause harmful interference, and (2) this device must accept any interference received, including interference that may cause undesired operation.
Any changes or modifications not expressly approved by the party responsible for compliance
could void the user's authority to operate the equipment.
NOTE: This equipment has been tested and found to comply with the limits for a Class B digital device, pursuant to Part 15 of the FCC Rules. These limits are designed to provide reasonable protection against harmful interference in a residential installation. This equipment generates, uses and can radiate radio frequency energy and, if not installed and used in accordance with the instructions, may cause harmful interference to radio communications. However, there is no guarantee that interference will not occur in a particular installation.
If this equipment does cause harmful interference to radio or television reception,
which can be determined by turning the equipment off and on, the user is encouraged to try to correct the interference by one or more of the following measures:
-- Reorient or relocate the receiving antenna.
-- Increase the separation between the equipment and receiver.
-- Connect the equipment into an outlet on a circuit different
from that to which the receiver is connected.
-- Consult the dealer or an experienced radio/TV technician for help.
To maintain compliance with FCC’s RF Exposure guidelines, This equipment should be installed and operated with minimum distance between 20cm the radiator your body: Use only the supplied antenna.

SUTO iTEC GmbH
Grißheimer Weg 21
D-79423 Heitersheim
Germany

Tel: +49 (0) 7634 50488 00
Fax: +49 (0) 7634 50488 19
Email: sales@suto-itec.com
Website: http://www.suto-itec.com

SUTO iTEC (ASIA) Co., Ltd.
Room 10, 6/F, Block B, Cambridge Plaza
188 San Wan Road, Sheung Shui, N.T.
Hong Kong

Tel: +852 2328 9782
Fax: +852 2671 3863
Email: sales@suto-itec.asia
Website: http://www.suto-itec.com

All rights reserved ©

Modifications and errors reserved

S431_im_en_2022-2