1. Overview

The ES8266 A1T1 offers a complete and self-contained Wi-Fi networking solution, allowing it to either host the application or to offload all Wi-Fi networking functions from another application processor.

When The ES8266 A1T1 hosts the application, and when it is the only application processor in the device, it is able to boot up directly from an external flash. It has integrated cache to improve the performance of the system in such applications, and to minimize the memory requirements.

Alternately, serving as a Wi-Fi adapter, wireless internet access can be added to any microcontroller-based design with simple connectivity through UART interface or the CPU AHB bridge interface.

The ES8266 A1T1 on-board processing and storage capabilities allow it to be integrated with the sensors and other application specific devices through its GPIOs with minimal development up-front and minimal loading during runtime. With its high degree of on-chip integration, which includes the antenna switch balun, power management converters, it requires minimal external circuitry, and the entire solution, including front-end module, is designed to occupy minimal PCB area.

Sophisticated system-level features include fast sleep/wake context switching for energy-efficient VoIP, adaptive radio biasing for low-power operation, advance signal processing, and spur cancellation and radio co-existence features for common cellular, Bluetooth, DDR, LVDS, LCD interference mitigation.

2. Features

- 802.11 b/g/n protocol
- Wi-Fi Direct (P2P), soft-AP
- Integrated TCP/IP protocol stack
- Integrated TR switch, balun, LNA, power amplifier and matching network
- Integrated PLL, regulators, and power management units
- +18.5dBm output power in 802.11b mode
- Integrated temperature sensor

- Supports antenna diversity
- Power down leakage current of < 10uA
- Integrated low power 32-bit CPU could be used as application processor
- SDIO 2.0, SPI, UART
- STBC, 1×1 MIMO, 2×1 MIMO
- A-MPDU & A-MSDU aggregation & 0.4μs guard interval
- Wake up and transmit packets in < 2ms
- Standby power consumption of < 1.0mW (DTIM3)

3. Block Diagram

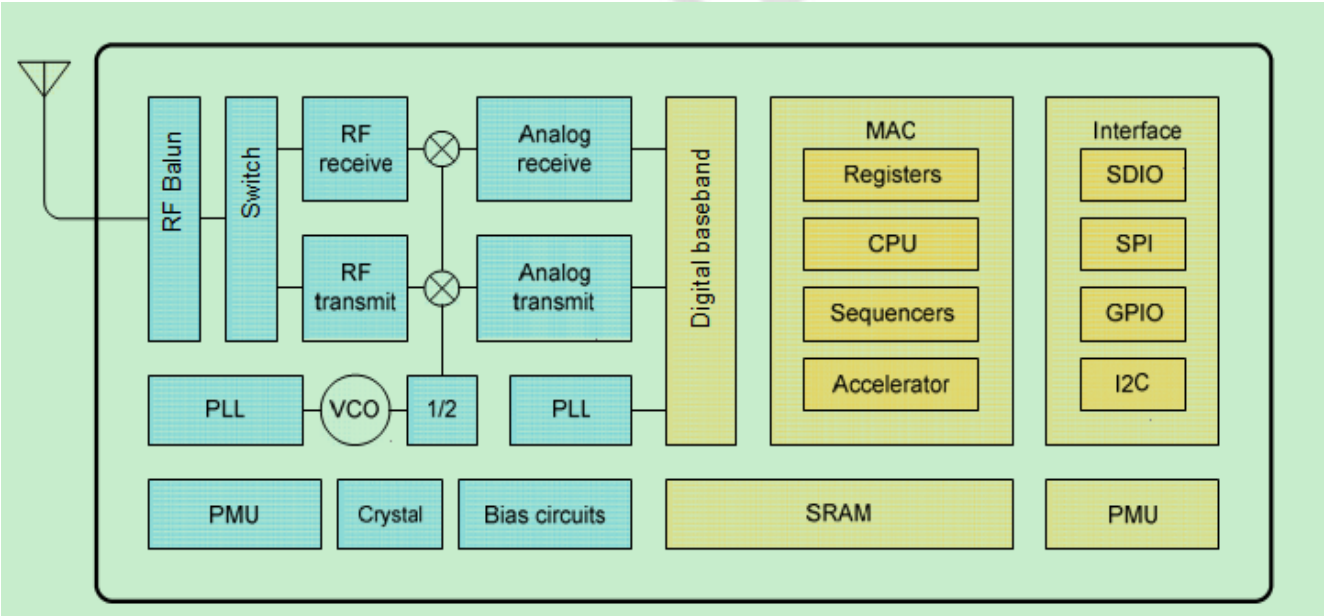

4.General Specification

Model	ES8266 A1T1
Product Name	WI-Fi 11b/g/n 1T1R
Major Chipset	Esp8266
Standard	802.11b/g/n
Data Transfer Rate	maximum of 72.2Mbps
Modulation Method	BPSK/ QPSK/ 16-QAM/ 64-QAM
Frequency Band	2.4~2.4835 GHz ISM Band
Spread Spectrum	IEEE 802.11b: DSSS (Direct Sequence Spread Spectrum) IEEE 802.11g/n:OFDM (Orthogonal Frequency Division Multiplexing)
RF Output Power	11n > 12dBm，11g > 13dBm，11b > 16dBm
Operation Mode	Ad hoc, Infrastructure
WLAN Receiver Sensitivity	11b CCK11(PER<8%) < -85dBm , 11g OFDM54(PER<10%) < -72dBm , 11n HT20 MCS7(PER<10%) < -69dBm ,
Operation Range	Up to 180 meters in open space
OS Support	Win7 32/64,Win8 32/64,Android
Security	WEP, TKIP, AES, WPA, WPA2
Interface	SDIO 2.0
Power Consumption	DC 3.3V Maximum power dissipation in 600mA
Operating Temperature	-20~ +60° C ambient temperature
Storage Temperature	-40 ~ 85°C ambient temperature
Humidity	5 to 90 % maximum (non-condensing)
Dimension	24*16mm (LxW) +-0.2MM

5.DC Characteristics

Mode	Min	Typ	Max	Unit
Transmit 802.11b, CCK 11Mbps, P_{OUT}=+17dBm		170		mA
Transmit 802.11g, OFDM 54Mbps, P_{OUT} =+15dBm		140		mA
Transmit 802.11n, MCS7, P_{OUT}=+13dBm		120		mA
Receive 802.11b, packet length=1024 byte, -80dBm		50		mA
Receive 802.11g, packet length=1024 byte, -70dBm		56		mA
Receive 802.11n, packet length=1024 byte, -65dBm		56		mA
Modem-Sleep		15		mA
Light-Sleep		0.9		mA
Deep-Sleep		10		uA
Off		5		uA

WLAN current consumption

Note: All result is measured at the antenna port and VDD33 is 3.3V

6. Pin Description and PCB size

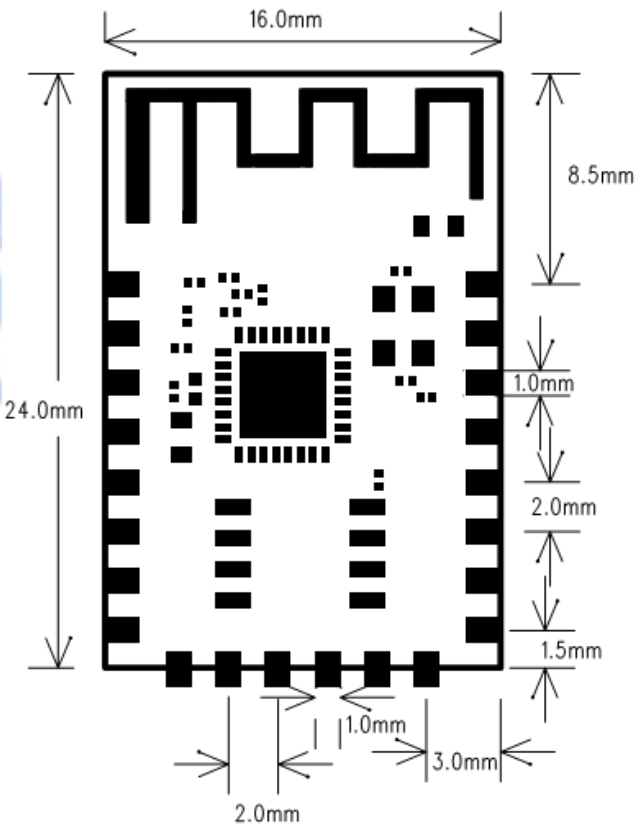

NO	Name	Description
1	RST	Reset
2	ADC	ADC
3	EN	Chip enable, active high
4	GPIO16	
5	GPIO14	
6	GPIO12	
7	GPIO13	
8	VCC	3.3V
9	CS0	Chip Select
10	MISO	
11	GPIO9	
12	GPIO10	
13	MOSI	
14	SCLK	
15	GND	
16	GPIO15	
17	GPIO2	
18	GPIO0	
19	GPIO4	
20	GPIO5	
21	RXD	UART RXD
22	TXD	UART TXD

Operating mode	GPIO0	GPIO2	GPIO15
UART 下载	低	高	低
Flash boot	高	高	低

Cdtech 中龙通

7.Modular

对应物料	型号规格	供应厂家
Crystal	26Mhz	晶威特，福晶
PCBA VER	132-8782660-00	怡科通,博敏

8. Recommended Reflow Profile

Referred IPC/JEDEC standard.

Peak Temperature : <250°C

Number of Times : 2 times

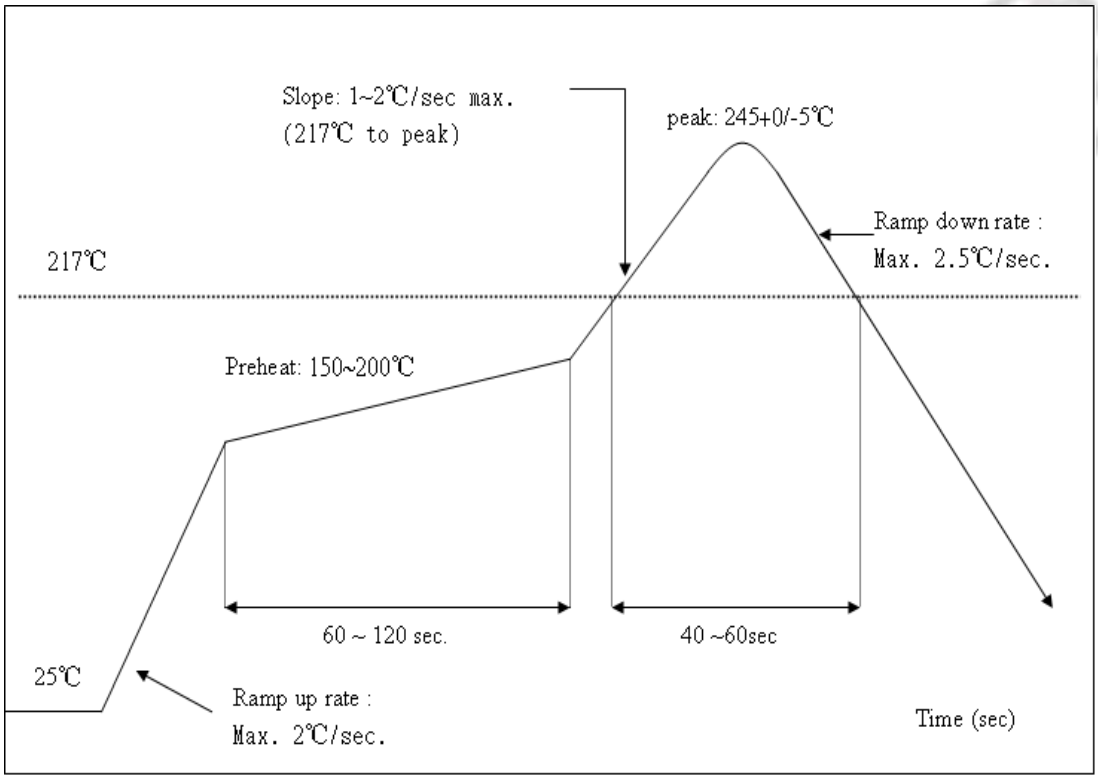

ESD CAUTION

The ES8266 A1T1 is ESD (electrostatic discharge) sensitive device and may be damaged with ESD or spike voltage. Although ES8266 A1T1 is with built-in ESD protection circuitry, please handle with care to avoid the permanent malfunction or the performance degradation.

This device is intended only for OEM integrators under the following conditions:
1) The antenna must be installed such that 20 cm is maintained between the antenna and users, and
2) The transmitter module may not be co-located with any other transmitter or antenna,
3) For all products market in US, OEM has to limit the operation channels in CH1 to CH11 for 2.4G band by supplied firmware programming tool. OEM shall not supply any tool or info to the end-user regarding to Regulatory Domain change.
As long as 3 conditions above are met, further transmitter test will not be required. However, the OEM integrator is still responsible for testing their end-product for any additional compliance requirements required with this module installed

The host will Satisfy Class I or Class Ⅱ permissive change based this module FCC ID.

If the FCC identification number is not visible when the module is installed inside the host, then the outside of the device into which the module is installed must also display a label referring to the enclosed module. This exterior label can use wording such as the following: "Contains Transmitter Module Contains FCC ID:2ASLM-ES8266A1T1 or "Contains FCC ID:2ASLM-ES8266A1T1 .Any similar wording that expresses the same meaning may be used.

Warning:

This device complies with Part 15 of the FCC Rules. Operation is subject to the following two conditions: (1) this device may not cause harmful interference, and (2) this device must accept any interference received, including interference that may cause undesired operation.

changes or modifications not expressly approved by the party responsible for compliance could void the user's authority to operate the equipment.
NOTE: This equipment has been tested and found to comply with the limits for a Class B digital device, pursuant to Part 15 of the FCC Rules. These limits are designed to provide reasonable protection against harmful interference in a residential installation. This equipment generates, uses and can radiate radio frequency energy and, if not installed and used in accordance with the instructions, may cause harmful interference to radio communications. However, there is no guarantee that interference will not occur in a particular installation.
If this equipment does cause harmful interference to radio or television reception, which can be determined by turning the equipment off and on, the user is encouraged to try to correct the interference by one or more of the following measures:
-- Reorient or relocate the receiving antenna.
-- Increase the separation between the equipment and receiver.
-- Connect the equipment into an outlet on a circuit different from that to which the receiver is connected.
-- Consult the dealer or an experienced radio/TV technician for help.
NOTE: This device and its antenna(s) must not be co-located or operation in conjunction with any other antenna or transmitter

RF Exposure Statement

To maintain compliance with FCC's RF Exposure guidelines, This equipment should be installed and operated with minimum distance of 20Cm the radiator your body. This device and its antenna(s) must not be co-located or operation in conjunction with any other antenna or transmitter