FCC ID: 2ASLP-RTL8192EU

# Product Specification

IEEE 802.11 b/g/n 2.4GHz 2T2R WiFi Module

| | | |
|---|---|---|
| Project Name | **2.4G WIFI Module** | |
| Model NO | RTL8192EU | |
| Customer | | |
| Customer's Part NO | | |
| | | Sales: |

| | | |
|---|---|---|
| **Feedback of customer's Confirmation**<br><br>**We accept the specification after Confirmed.** | | |
| **Customer** | **Customer signature** | **Approved Date** |
| | | |

**CONTENTS**

0 REVESION HISTORY ..... 3
0.1 MODEL NO DEFINITION ..... 3
1 INTRODUCTIONS ..... 4
1.1 OVERVIEW ..... 4
1.2 PRODUCT FEATURES ..... 4
2 GENERAL SPECIFICATION ..... 5
2.1 WIFI RF SPECIFICATION ..... 5
2.2 POWER CONSUMPTION ..... 6
3 MECHANICAL SPECIFICATION ..... 6
3.1 OUTLINE DRAWING ..... 6
3.2 PIN DEFINITION ..... 6
4 ENVIRONMENTAL REQUIREMENTS ..... 7
4.1 OPERATING & STORAGE CONDITIONS ..... 7
4.2 RECOMMENDED REFLOW PROFILE ..... 7
4.3 NOTICE ..... 7

## 0. Revision History

| REV NO | Date | Modifications | Draft |
|---|---|---|---|
| | | | |
| | | | |
| | | | |
| | | | |

## 0.1. Model No Definition

## 1. Introduction

### 1.1 Overview

T8192E md is a highly integrated and excellent performance Wireless LAN (WLAN) USB2.0 network interface device. High-speed wireless connection up to 150 Mbps.

The general hardware for the module is shown in Figure 1. This WLAN Module design is based on Realtek RTL8192EU. It is a highly integrated single-chip MIMO ( Multiple In Multiple Out ) Wireless LAN (WLAN) USB2.0 network interface controller complying with the 802.11n specification. It combines a MAC, a 2T2R capable baseband, and RF in a single chip. The RTL8192EU provides a complete solution for a highthroughput performance wireless client.

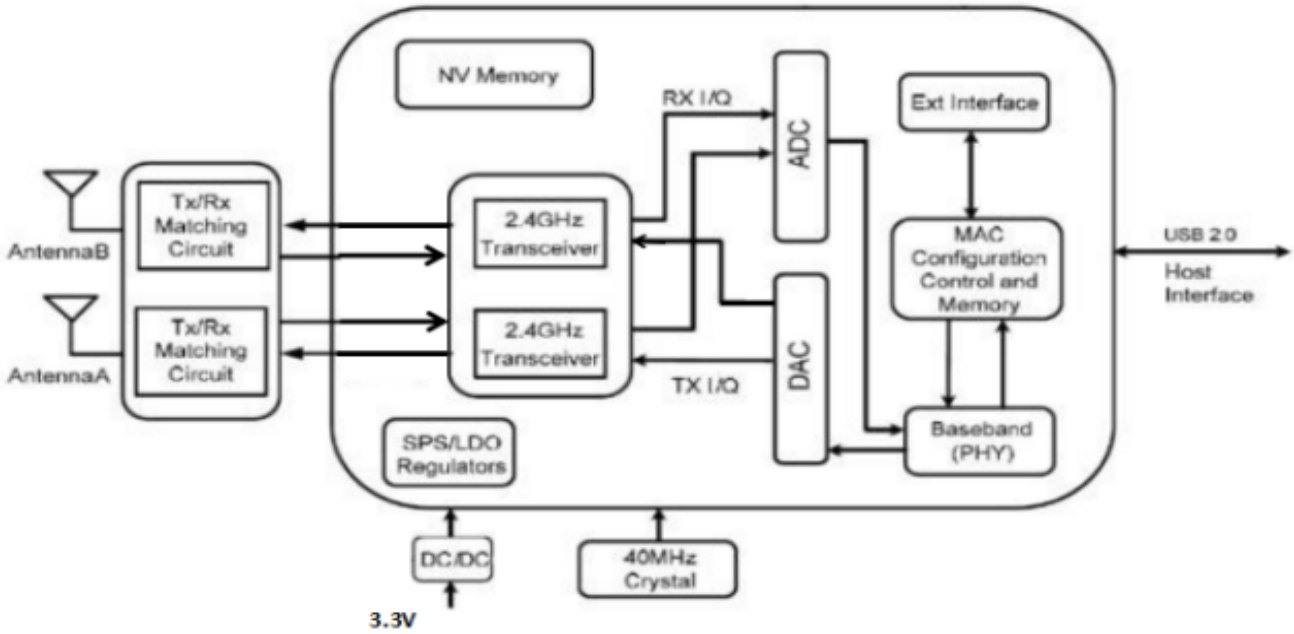


Figure 1.single-Band 11n(2x2)Solution

### 1.2 Product Features

- Operate at ISM frequency bands (2.4GHz)
- USB Interface for WiFi
- IEEE standards support: IEEE 802.11b, IEEE 802.11g, IEEE 802.11n,
- Enterprise level security which can apply WPA/WPA2 certification for WiFi.
- WiFi 2 transmitter and 2 receiver allow data rates supporting up to 150 Mbps downstream and 150 Mbps upstream PHY rates

## 2. GENERAL SPECIFICATION

### 2.1 WiFi RF Specifications

| Features | Descriptions |
|---|---|
| **Main Chipset** | RTL8192EU |
| **Frequency Range** | 2.402～2.494GHz |
| **Operating Voltage** | 3.3Vdc ±5% I/O supply voltage |
| **Host Interface** | **WiFi:** USB |
| **Standards** | **WiFi:**<br>IEEE 802.11b,<br>IEEE 802.11g,<br>IEEE 802.11n, |
| **Modulation** | **WiFi:**<br>802.11b: CCK(11, 5.5Mbps), QPSK(2Mbps), BPSK(1Mbps),<br>802.11 g/n: OFDM |
| **PHY Data rates** | **WiFi:**<br>802.11b: 11,5.5,2,1 Mbps<br>802.11g: 54,48,36,24,18,12,9,6 Mbps<br>802.11n: up to 150Mbps |
| **Transmit Output Power** | **WiFi:**<br>802.11b@11Mbps path A:18 **±2** dBm<br>path B:18 **±2** dBm<br>802.11g@54Mbps path A:16 **±2** dBm<br>path B:16 **±2** dBm<br>802.11n@65Mbps path A:16 **±2** dBm (MCS 7_HT20)<br>path B:16 **±2** dBm (MCS 7_HT20) |
| **EVM** | 802.11b /11Mbps : EVM≦-10dB<br>802.11g /54Mbps : EVM≦-25dB<br>802.11n /65Mbps : EVM≦-29dB |
| **Receiver Sensitivity (HT 20)** | **802.11b@8% PER**<br>1Mbps -88±1dBm<br>2Mbps -87±1dBm<br>5.5Mbps -85±1dBm<br>11Mbps -82±1dBm |
| | **802.11g@10% PER**<br>6Mbps -86±1dBm<br>9Mbps -85±1dBm<br>12Mbps -84±1dBm<br>18Mbps -82±1dBm<br>24Mbps -80±1dBm<br>36Mbps -77±1dBm<br>48Mbps -73±1dBm<br>54Mbps -71±1dBm |
| | **802.11n@10% PER**<br>MCS 0 -83±1dBm<br>MCS 1 -82±1dBm<br>MCS 2 -80±1dBm<br>MCS 3 -78±1dBm<br>MCS 4 -75±1dBm<br>MCS 5 -71±1dBm<br>MCS 6 -69±1dBm<br>MCS 7 -67±1dBm |
| **Operating Channel** | **WiFi 2.4GHz:**<br>11: (Ch. 1-11) – United States(North America)<br>13: (Ch. 1-13) – Europe<br>14: (Ch. 1-14) – Japan |
| **Media Access Control** | **WiFi:** CSMA/CA with ACK |
| **Network Architecture** | **WiFi:** Ad-hoc mode (Peer-to-Peer )<br>Infrastructure mode<br>Software AP<br>WiFi Direct |

| | |
|---|---|
| **Security** | **WiFi:** WPA, WPA-PSK, WPA2, WPA2-PSK, WEP 64bit & 128bit, |
| **Antenna** | IPEX |
| **OS Supported** | Android /Linux/ Win CE /iOS /XP/WIN7 |
| **Dimension** | Typical L38.0mm*W18.1mm*T5.6mm |

### 2.2 Power Consumption

| | |
|---|---|
| **Power Consumption (Typical by using SWR)** | **WiFi only:**<br>LINK: 400mA<br>TX Mode: (Continuous mode) 360mA (MCS7/BW20M/16dBm)<br>TX Mode: (Continuous mode) 500mA (CCK-1M/BW20M/18dBm)<br>RX Mode: (Continuous mode) 350mA (MCS7 /-69dBm) |

## 3. Mechanical Specification

### 3.1 Outline Drawing

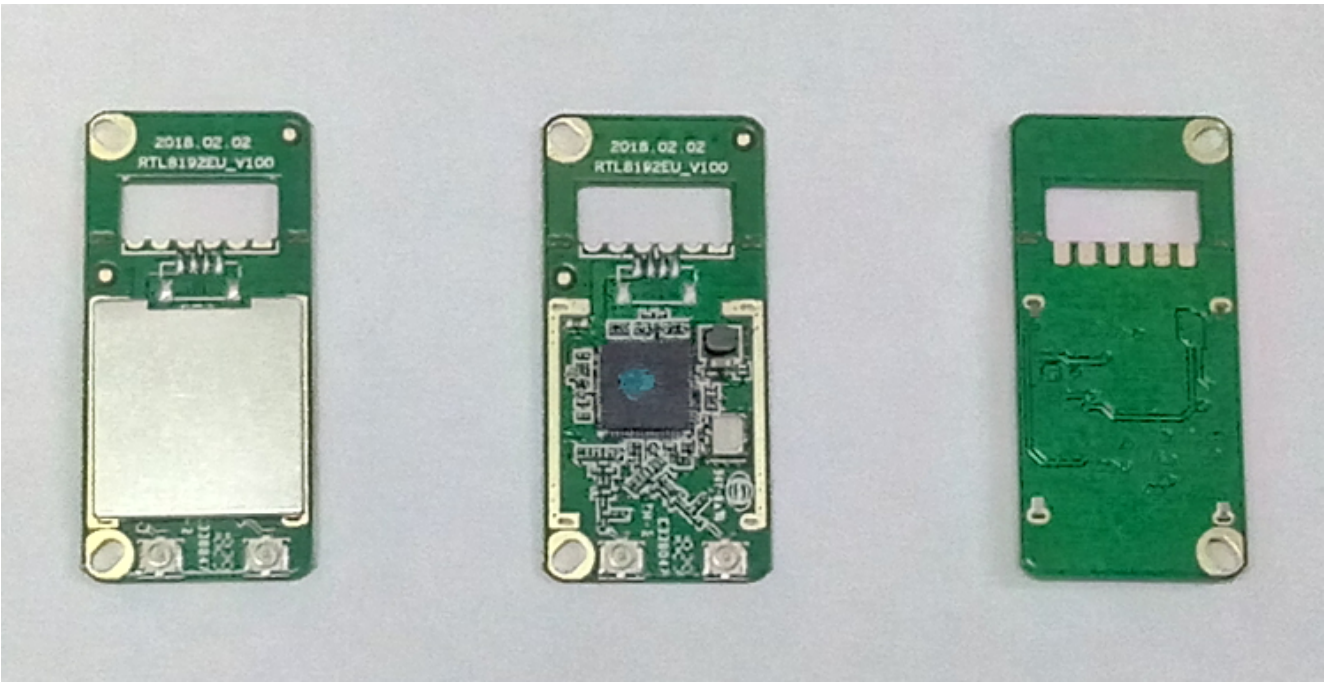


### 3.2 PIN Definition

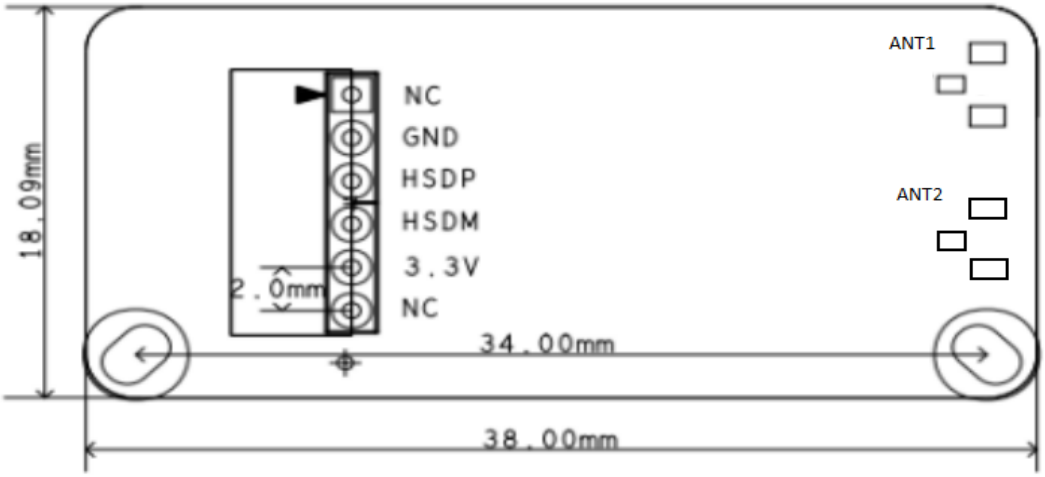

## 4. Environmental Requirements

**4.1** Operating& Storage Conditions

| | |
|---|---|
| Operating | Temperature: -20°C to +50°C |
| | Relative Humidity: 10-90% (non-condensing) |
| Storage | Temperature: -40°C to +80°C (non-operating) |
| | Relative Humidity: 5-90% (non-condensing) |
| MTBF (Mean Time Between Failures) | Over 150,000hours |

**4.2 Recommended Reflow Profile**
Referred to IPC/JEDEC standard.
Peak Temperature : <250°C
Number of Times : ≤2 times

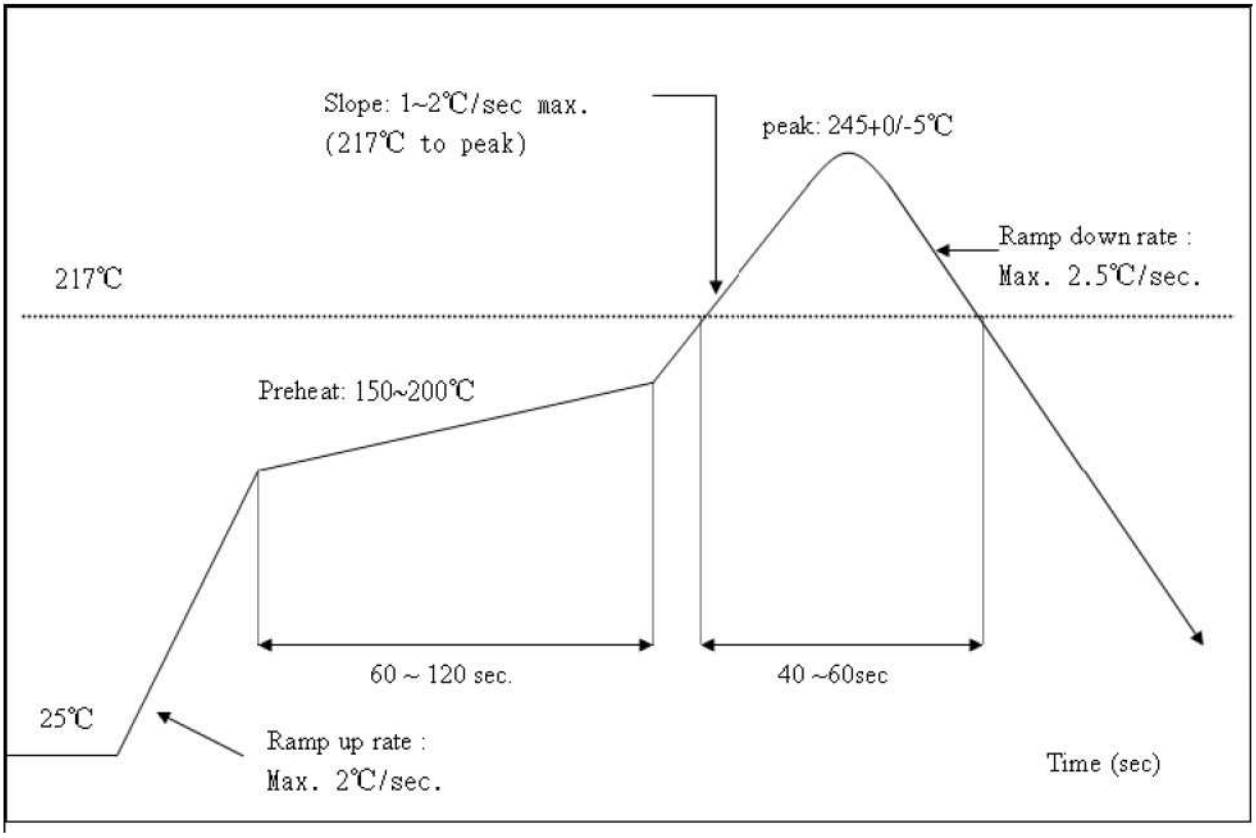


**4.3 Patch WIFI modules installed before the notice:**

WIFI module installed note:
1. Please press 1 : 1 and then expand outward proportion to 0.7 mm, 0.12 mm thickness When open a stencil
2. Take and use the WIFI module, please insure the electrostatic protective measures.
3. Reflow soldering temperature should be according to the customer the main size of the products, such as the temperature set at 250 + 5 ℃ for the MID motherboard.

About the module packaging, storage and use of matters needing attention are as follows:
1. The module of the reel and storage life of vacuum packing: 1). Shelf life: 8 months, storage environment conditions: temperature in: < 40 ℃, relative humidity: < 90% r.h.
2. The module vacuum packing once opened, time limit of the assembly:
Card: 1) check the humidity display value should be less than 30% (in blue), such as: 30% ~ 40% (pink), or greater than 40% (red) the module have been moisture absorption.
2.) factory environmental temperature humidity control: ≦ 30 ℃, ≦ 60% RH..
3). Once opened, the workshop the preservation of life for 168 hours.

FCC Statement

This equipment has been tested and found to comply with the limits for a Class B digital device, pursuant to part 15 of the FCC rules. These limits are designed to provide reasonable protection against harmful interference in a residential installation. This equipment generates, uses and can radiate radio frequency energy and, if not installed and used in accordance with the instructions, may cause harmful interference to radio communications. However, there is no guarantee that interference will not occur in a particular installation. If this equipment does cause harmful interference to radio or television reception, which can be determined by turning the equipment off and on, the user is encouraged to try to correct the interference by one or more of the following measures:

-Reorient or relocate the receiving antenna.

-Increase the separation between the equipment and receiver.

-Connect the equipment into an outlet on a circuit different from that to which the receiver is connected.

-Consult the dealer or an experienced radio/TV technician for help.

Any Changes or modifications not expressly approved by the party responsible for compliance could void the user's authority to operate the equipment.

This device complies with part 15 of the FCC Rules. Operation is subject to the following two conditions:

(1) This device may not cause harmful interference, and

(2) This device must accept any interference received, including interference that may cause undesired operation.

FCC Radiation Exposure Statement:

This equipment complies with FCC radiation exposure limits set forth for an uncontrolled environment .This equipment should be installed and operated with minimum distance 20cm between the radiator& your body.

FCC Label Instructions

The outside of final products that contains this module device must display a label referring to the enclosed module. This exterior label can use wording such as: "Contains Transmitter Module FCC ID: 2ASLP-RTL8192EU," or "Contains FCC ID: 2ASLP-RTL8192EU" Any similar wording that expresses the same meaning may be used.

**Manual Information To the End User**

The OEM integrator has to be aware not to provide information to the end user regarding how to install or remove tis RF module in the user's manual of the end product which integrates this module.

This module is intended for OEM integrator. The OEM integrator is still responsible for the FCC compliance requirement of the end product, which integrates this module.

This transmitter/module must not be collocated or operating in conjunction with any other antenna or transmitter.

This radio transmitter **2ASLP-RTL8192EU** has been approved by Federal Communications Commission to operate with the antenna types listed below, with the maximum permissible gain indicated. Antenna types not included in this list that have a gain greater than the maximum gain indicated for any type listed are strictly prohibited for use with this device.

| Frequency(MHz) | Antenna Type | Antenna Gain(dBi) |
|---|---|---|
| 2412-2462 | RP-SMA | 5 |