AVANTE

A12X

ELEVATING
YOUR
SOUND

USER
MANUAL

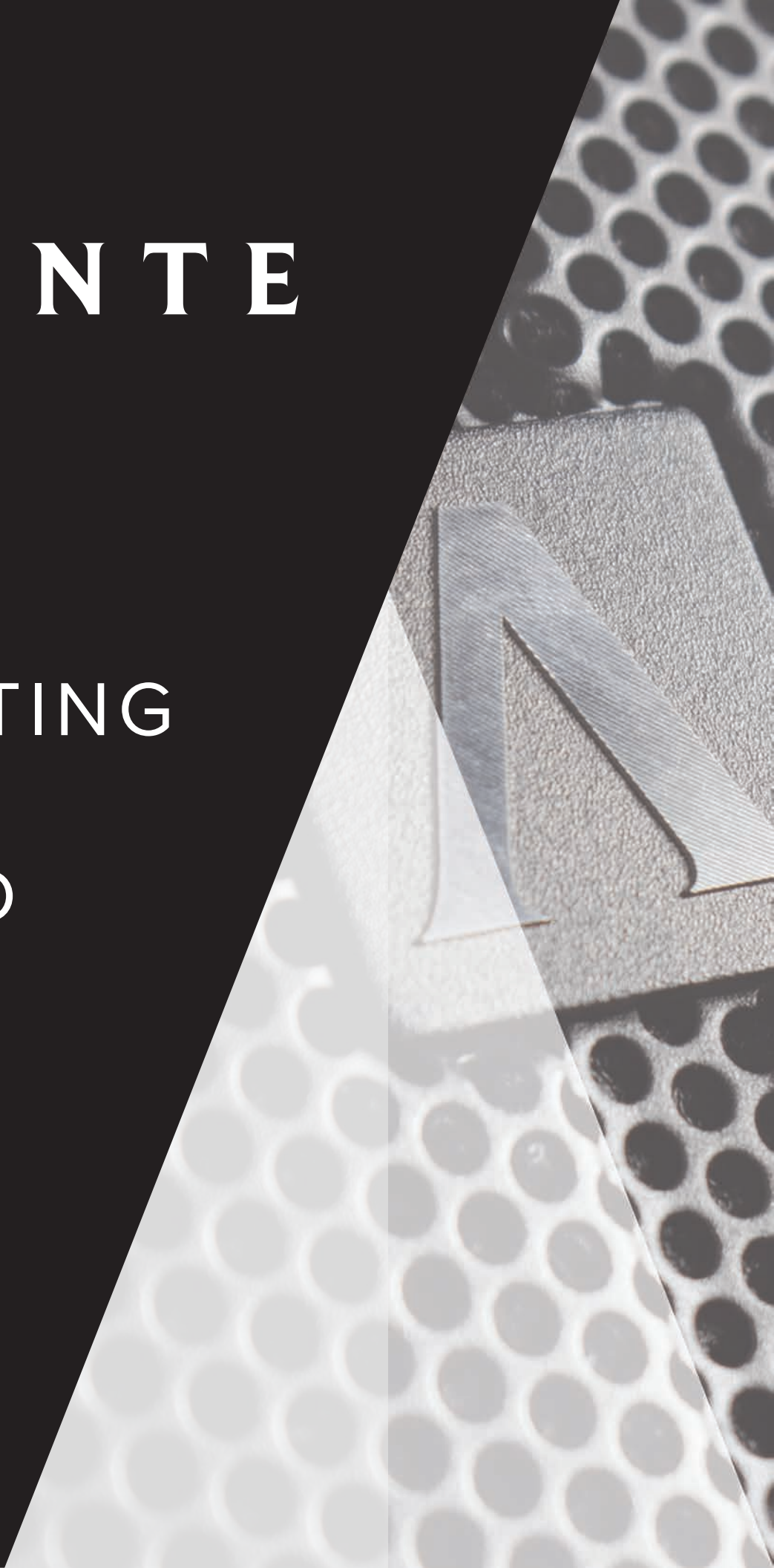

©2023 Avante Audio all rights reserved. Information, specifications, diagrams, images, and instructions herein are subject to change without notice. Avante logo and identifying product names and numbers herein are trademarks of Avante Audio. Copyright protection claimed includes all forms and matters of copyrightable materials and information now allowed by statutory or judicial law or hereinafter granted. Product names used in this document may be trademarks or registered trademarks of their respective companies and are hereby acknowledged. All non-Avante brands and product names are trademarks or registered trademarks of their respective companies.

Avante Audio and all affiliated companies hereby disclaim any and all liabilities for property, equipment, building, and electrical damages, injuries to any persons, and direct or indirect economic loss associated with the use or reliance of any information contained within this document, and/or as a result of the improper, unsafe, insufficient and negligent assembly, installation, rigging, and operation of this product.

The Bluetooth® word mark and logos are registered trademarks owned by Bluetooth SIG, Inc. and any use of such marks by Avante Audio is under license. Other trademarks and trade names are those of their respective owners.

AVANTE World Headquarters USA
6122 S. Eastern Ave. I Los Angeles, CA 90040 USA
323-316-9722 I Fax: 323-582-2941 I www.avanteaudio.com I info@avanteaudio.com

AVANTE NETHERLANDS
Junostraat 2 I 6468 EW Kerkrade I Netherlands
+31 45 546 85 00 I Fax: +31 45 546 85 99 I europe@avanteaudio.com

AVANTE MEXICO
Santa Ana 30 I Parque Industrial Lerma I Lerma Mexico 52000
+52 (728) 282.7070 I ventas@avanteaudio.com

FCC STATEMENT
This device complies with Part 15 of the FCC Rules. Operation is subject to the following two conditions: (1) this device may not cause harmful interference, and (2) this device must accept any interference received, including interference that may cause undesired operation.

FCC RADIO FREQUENCY INTERFERENCE WARNINGS & INSTRUCTIONS
This product has been tested and found to comply with the limits as per Part 15 of the FCC Rules. These limits are designed to provide reasonable protection against harmful interference in a residential installation. This device uses and can radiate radio frequency energy and, if not installed and used in accordance with the included instructions, may cause harmful interference to radio communications. However, there is no guarantee that interference will not occur in a particular installation. If this device does cause harmful interference to radio or television reception, which can be deter- mined by turning the device off and on, the user is encouraged to try to correct the interference by one or more of the following methods:

- Reorient or relocate the device.
- •ncrease the separation between the device and the receiver.
- Connect the device to an electrical outlet on a circuit different from which the radio receiver is connected.
- Consult the dealer or an experienced radio/TV technician for help.

Energy Saving Matters (EuP 2009/125/EC)
Saving electric energy is a key to help protecting the environment. Please turn off all electrical products when they are not in use. To avoid power consumption in idle mode, disconnect all electrical equipment from power when not in use. Thank you!

Document Version: An updated version of this document may be available online. Please check online at www.avante.com for the latest revision/update of this document before beginning installation and use.

Date	Document Version	Notes
05/26/2023	1.0	Initial release

CONTENTS

General Information	4
Limited Warranty (USA Only)	5
Safety Guidelines	6
Overview	8
Connections & Controls	9
Installation	10
DSP Operation	15
Application Control	20
Application Diagrams	33
Frequency Charts	35
Specifications	36
Dimensional Drawings	37
Components & Accessories I FCC Statement	38

GENERAL INFORMATION

INTRODUCTION

This speaker is designed for professional use only. Please read and understand all the instructions and guidelines in this manual carefully and thoroughly before attempting to operate these speakers. These instructions contain important information regarding safety, installation, and use.

UNPACKING

Every speaker has been thoroughly tested and has been shipped in perfect operating condition. Carefully check the shipping carton for damage that may have occurred during shipping. If the carton appears to have been damaged, carefully inspect the speaker for damage and be sure all accessories necessary to install and operate the speaker have arrived intact. In the event that damage has been found or parts are missing, please contact our customer support team for further instructions. Please do not return this speaker to your dealer without first contacting customer support at the number listed below. Please do not discard the shipping carton in the trash. Please recycle whenever possible.

CUSTOMER SUPPORT

AVANTE provides a customer support line to provide set up help, assist with any questions or problems that may arise during set up or initial installation, and for any service related issues. You may also visit us on the web at www.avanteaudio.com for any comments or suggestions.

AVANTE SERVICE USA – Monday – Friday 8:00am to 4:30pm PST
Voice: 800-322-6337 **Fax: 323-532-2941**
support@avanteaudio.com

AVANTE SERVICE EUROPE - Monday - Friday 08:30 to 17:00 CET
Voice: +31 45 546 85 30 **Fax: +31 45 546 85 96**
europe@avanteaudio.com

@avanteaudio

WARRANTY REGISTRATION

Please register your product online: www.avanteaudio.com. Online product registration is required in order to activate the third year of the 3-year warranty. All returned service items, whether under warranty or not, must be freight pre-paid and accompanied by a return authorization (R.A.) number. The R.A. number must be clearly written on the outside of the return package. A brief description of the problem as well as the R.A. number must also be written down on a piece of paper and included in the shipping container. If the unit is under warranty, you must provide a copy of your proof of purchase invoice, and the unit must be registered online at www.avanteaudio.com to receive year 3 of the 3-year warranty. Items returned without an R.A. number clearly marked on the outside of the package will be refused and returned at customer's expense. You may obtain an R.A. number by contacting customer support.

LIMITED WARRANTY (USA ONLY)

1. ADJ Products, LLC hereby warrants, to the original purchaser, AVANTE products to be free of manufacturing defects in material and workmanship for a prescribed period of up to 3-years (1,095 days) from the original purchase date. Product must be registered online at www.avanteaudio.com in order to activate year 3 of the 3-year warranty period. This warranty shall be valid only if the product is purchased within the United States of America, including possessions and territories. It is the owner's responsibility to establish the date and place of purchase by acceptable evidence at the time service is sought.
2. For warranty service you must obtain a Return Authorization number (RA#) before sending the product back; please contact ADJ Products, LLC Service Department at 800-322-6337. Send the product only to the ADJ Products, LLC factory. All shipping charges must be pre-paid. If the requested repairs or service (including parts replacement) are within the terms of this warranty, ADJ Products, LLC will pay return shipping charges only to a designated point within the United States. If the entire instrument is sent, it must be shipped in its original package. No accessories should be shipped with the product. If any accessories are shipped with the product, ADJ Products, LLC shall incur no liability whatsoever for loss of or damage to any such accessories, or for the safe return thereof.
3. This warranty is void if the serial number has been altered or removed; if the product is modified in any manner which ADJ Products, LLC concludes, after inspection, affects the reliability of the product; if the product has been repaired or serviced by anyone other than the ADJ Products, LLC factory unless prior written authorization was issued to purchaser by ADJ Products, LLC; if the product is damaged because it was not properly maintained as set forth in the instruction manual.
4. This is not a service contract, and this warranty does not include maintenance, cleaning or periodic checkup. During the period specified above, ADJ Products, LLC will replace defective parts at its expense with new or refurbished parts, and will absorb all expenses for warranty service and repair labor by reason of defects in material or workmanship. The sole responsibility of ADJ Products, LLC under this warranty shall be limited to the repair of the product, or replacement thereof, including parts, at the sole discretion of ADJ Products, LLC. All products covered by this warranty were manufactured after August 15, 2012, and bear identifying marks to that effect.
5. ADJ Products, LLC reserves the right to make changes in design and/or improvements upon its products without any obligation to include these changes in any products theretofore manufactured. No warranty, whether expressed or implied, is given or made with respect to any accessory supplied with products described above. Except to the extent prohibited by applicable law, all implied warranties made by ADJ Products, LLC in connection with this product, including warranties of merchantability or fitness, are limited in duration to the warranty period set forth above. And no warranties, whether expressed or implied, including warranties of merchantability or fitness, shall apply to this product after said period has expired. The consumer's and/or Dealer's sole remedy shall be such repair or replacement as is expressly provided above; and under no circumstances shall ADJ Products, LLC be liable for any loss or damage, direct or consequential, arising out of the use of, or inability to use, this product. This warranty is the only written warranty applicable to ADJ Products, LLC Products and supersedes all prior warranties and written descriptions of warranty terms and conditions heretofore published.
6. Warranty Registration: Please register your product online: www.avanteaudio.com. Online product registration is required in order to activate the third year of the 3-year warranty. All returned service items, whether under warranty or not, must be freight pre-paid and accompany a return authorization (R.A.) number. The R.A. number must be clearly written on the outside of the return package. A brief description of the problem as well as the R.A. number must also be written down on a piece of paper and included in the shipping container. If the unit is under warranty, you must provide a copy of your proof of purchase invoice and the unit must be registered online at www.avanteaudio.com to receive year 3 of the 3-year warranty. Items returned without an R.A. number clearly marked on the outside of the package will be refused and returned at customer's expense. You may obtain an R.A. number by contacting customer support.

SAFETY GUIDELINES

This speaker is a sophisticated piece of electronic equipment. To guarantee a smooth operation, it is important to follow all instructions and guidelines in this manual. AVANTE is not responsible for injury and/or damages resulting from the misuse of this speaker due to the disregard of the information printed in this manual. Only qualified and/or certified personnel should perform the installation of this speaker and all included and/or optional rigging accessories. Only the original included and/or optional rigging parts and accessories for this speaker should be used for proper installation. Any modifications to the speaker, included and/or optional rigging parts and accessories will void the original manufacturer's warranty and increase the risk of damage and/or personal injury.

PROTECTION CLASS 1 – SPEAKER MUST BE PROPERLY GROUNDED

TO REDUCE RISK OF ELECTRICAL SHOCK, DO NOT REMOVE ANY COVER.
THERE ARE NO USER SERVICEABLE PARTS INSIDE THIS SPEAKER.
DO NOT ATTEMPT ANY REPAIRS YOURSELF, AS DOING SO WILL VOID YOUR MANUFACTURER'S WARRANTY. DAMAGES RESULTING FROM MODIFICATIONS TO THIS SPEAKER AND/OR THE DISREGARD OF SAFETY INSTRUCTIONS AND GUIDELINES IN THIS MANUAL VOID THE MANUFACTURER'S WARRANTY AND ARE NOT SUBJECT TO ANY WARRANTY CLAIMS AND/OR REPAIRS.
NEVER OPEN THIS SPEAKER WHILE IN USE!
UNPLUG POWER BEFORE SERVICING SPEAKER!
KEEP FLAMMABLE MATERIALS AWAY FROM SPEAKER!

DRY LOCATIONS USE ONLY!
DO NOT EXPOSE SPEAKER TO RAIN AND/OR MOISTURE!
DO NOT SPILL WATER AND/OR LIQUIDS ON OR INTO THE SPEAKER!

This speaker is for PROFESSIONAL USE ONLY! Read all INSTRUCTIONS and follow all WARNINGS!

- **DO NOT** use speaker near wet and/or damp locations. Speaker must be kept away from direct contact with liquids and must not be exposed to water/liquid dripping or splashing.
- **DO NOT** attempt installation and/or operation without knowledge how to do so. Consult a professional sound equipment installer for proper and safe speaker installation. ONLY the original included, and/or optional rigging parts and accessories listed in this manual should be used for installation and operation.
- **DO NOT** expose any part of the speaker to open flame or smoke, or position speaker close to any flammable materials during operation. The speaker contains an internal power amplifier that produces heat during use. Keep speaker away from heat sources such as radiators, heat registers, stoves, or other appliances (including amplifiers) that produce heat.
- Be sure to install this speaker in an area that will allow proper ventilation. Allow approximately 6 inches (152mm) behind the speaker cabinet for proper cooling.
- **DO NOT** operate speaker if power cord is frayed, crimped, damaged, and/or if any of the power cord connectors are damaged and do not insert into the speaker securely with ease. NEVER force a power cord connector into the speaker. If the power cord or any of its connectors are damaged, replace it immediately with a new one of the same power rating.
- **DO NOT** disassemble speaker, as there are NO user serviceable parts inside. Refer all servicing to qualified service personnel. Servicing is required when the speaker has been damaged in any way, such as damage to the power-supply cord or plug, exposure to liquid, rain, or moisture, objects falling onto the speaker or dropping of the speaker itself, or any abnormal operation.
- **DO NOT** defeat the safety purpose of the polarized or grounding-type plug. A polarized plug has two blades with one wider than the other. A grounding type plug has two blades and a third grounding prong. The wide blade or the third prong is provided for your safety. If the provided plug does not fit into your outlet, consult an electrician for replacement of the obsolete outlet.

SAFETY GUIDELINES

- **POWER SOURCES**: This product must be connected to a power supply only of the type described in these operating instructions, or as marked on the unit. This product is Country Specific.
- **PROTECTIVE EARTHING TERMINAL**: The speaker should be connected to a mains socket outlet with a protective earth-ground/earthing connection.
- **ONLY** handle power cord by the plug end, never pull the plug out by tugging the wire portion of the cord.
- **DO NOT** use solvents or glass cleaner to clean speaker. Clean only with a dry cloth.
- **ALWAYS** disconnect speaker from main power source before performing any servicing or cleaning procedure.
- **CAUTION**: To avoid physical damage, read the installation instructions carefully before installation.
- **CAUTION**: Listening to speakers at high volume for extended time or within immediate proximity may damage hearing.
- **CAUTION**: Speakers should be installed/operated by qualified and trained professionals ONLY.
- **CAUTION**: Always mount speakers in a safe and stable manner.
- **CAUTION**: Wear appropriate safety equipment during speaker installation.
- **CAUTION**: Route power and audio cables so that they are NOT likely to be walked on or pinched.
- **CAUTION**: Unplug the speaker during lightning storms and/or when unused for long periods of time.
- **ONLY** use the original packaging materials and/or case to transport the speaker in for service.
- **PLEASE** recycle shipping boxes and packaging whenever possible.

OVERVIEW

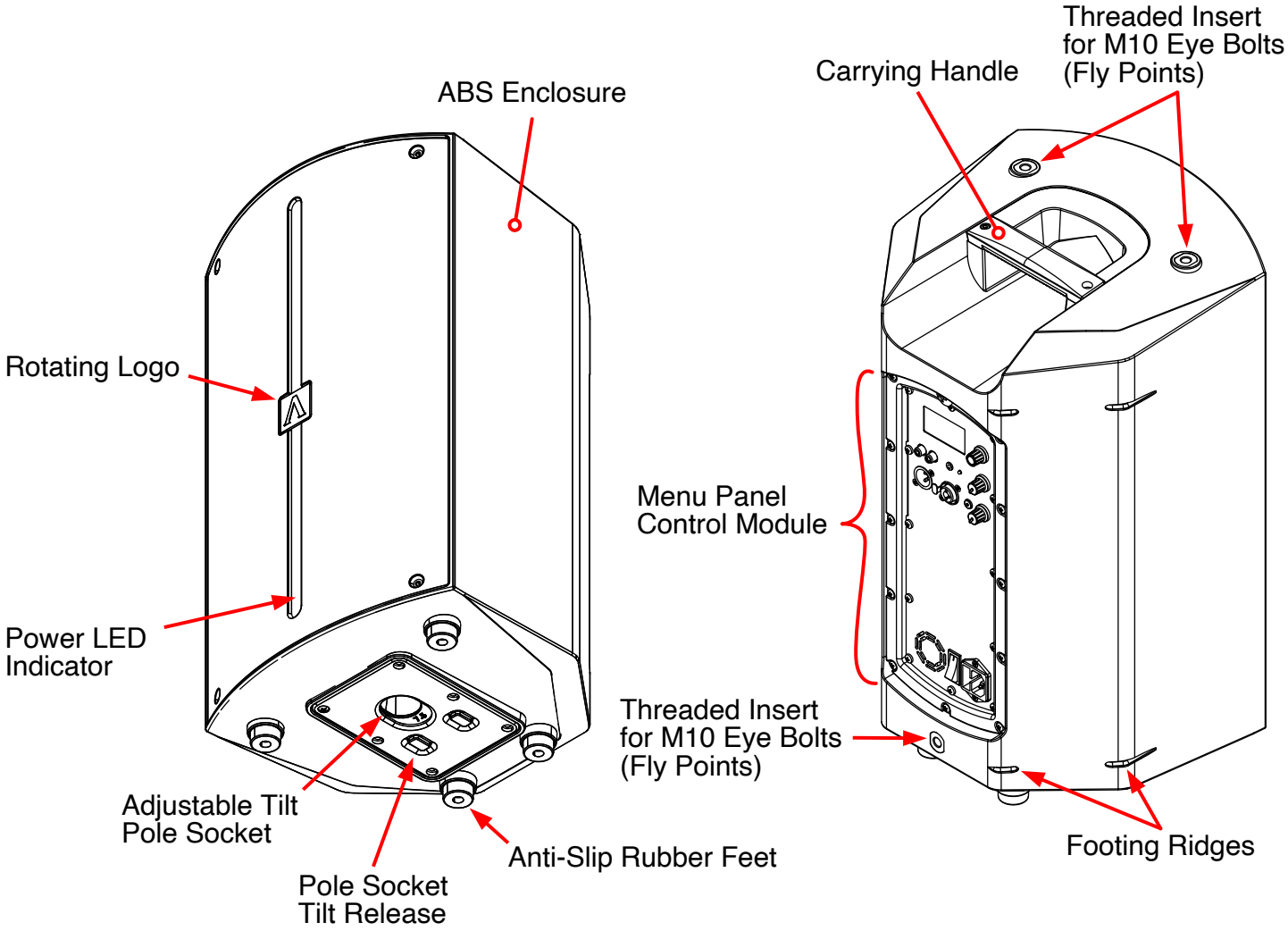
ABS Enclosure
Rotating Logo
Power LED
Indicator
Adjustable Tilt
Pole Socket
Pole Socket
Tilt Release
Anti-Slip Rubber Feet
Carrying Handle
Threaded Insert
for M10 Eye Bolts
(Fly Points)
Menu Panel
Control Module
Threaded Insert
for M10 Eye Bolts
(Fly Points)
Footing Ridges

CONTROLS AND CONNECTIONS

INSTALLATION

STANDARD SPEAKER STAND

The **A12X** speakers can be pole mounted on a standard speaker stand (not included), or pole mounted on top of the A18S sub woofers using the included sub speaker poles. Additionally, the A12X speakers can be permanently installed using optional M10 Eye Bolts or optional Wall Mounts.

Standard Speaker Stand
(stand not included)

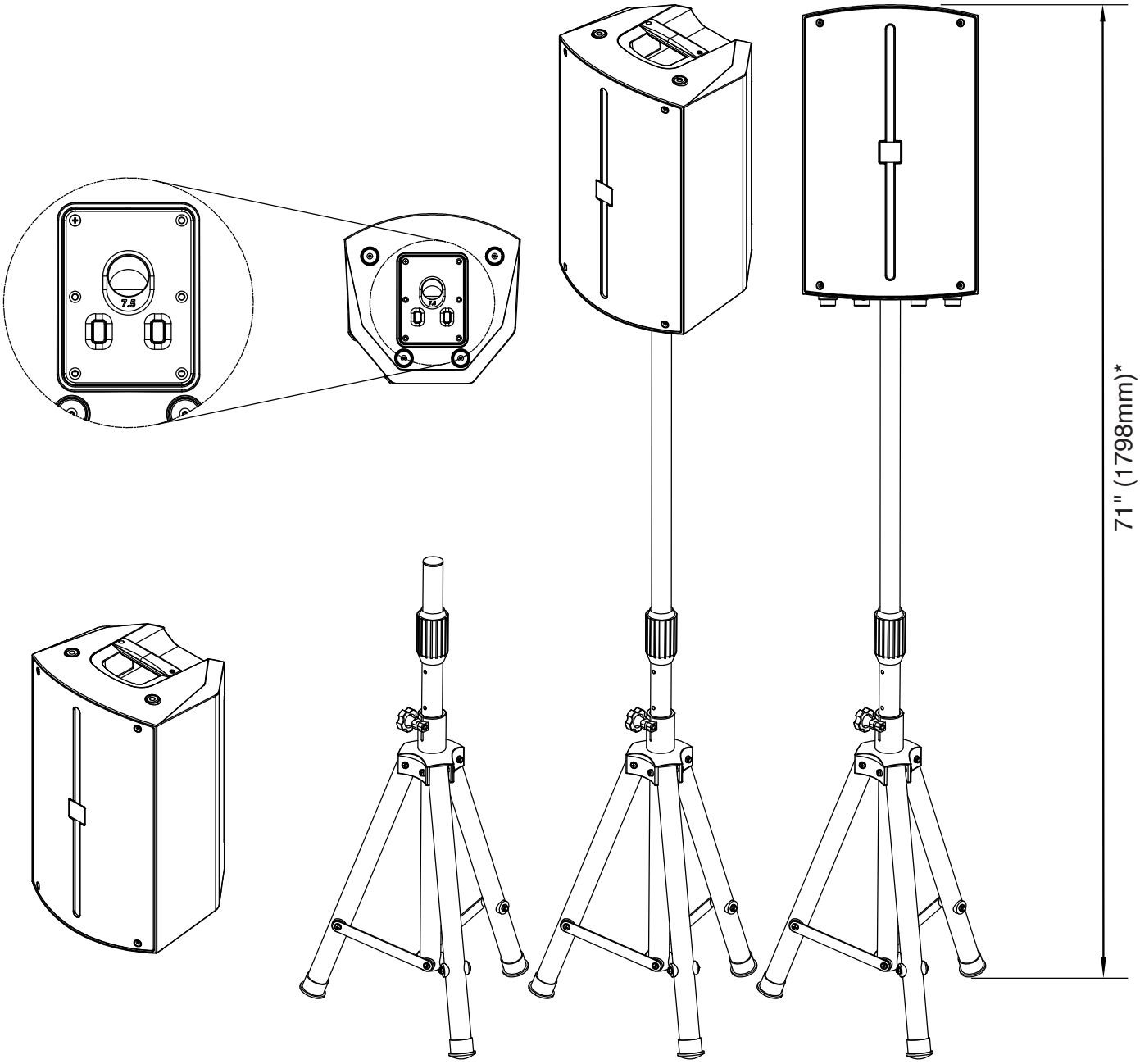

*reference only

INSTALLATION

Floor Monitor

A12X speaker has an integrated 45° angle back panel for use as floor monitor.

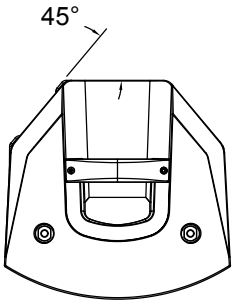

Note that only one angled back panel has footing ridges to stabilize the speaker when positioned as a floor monitor

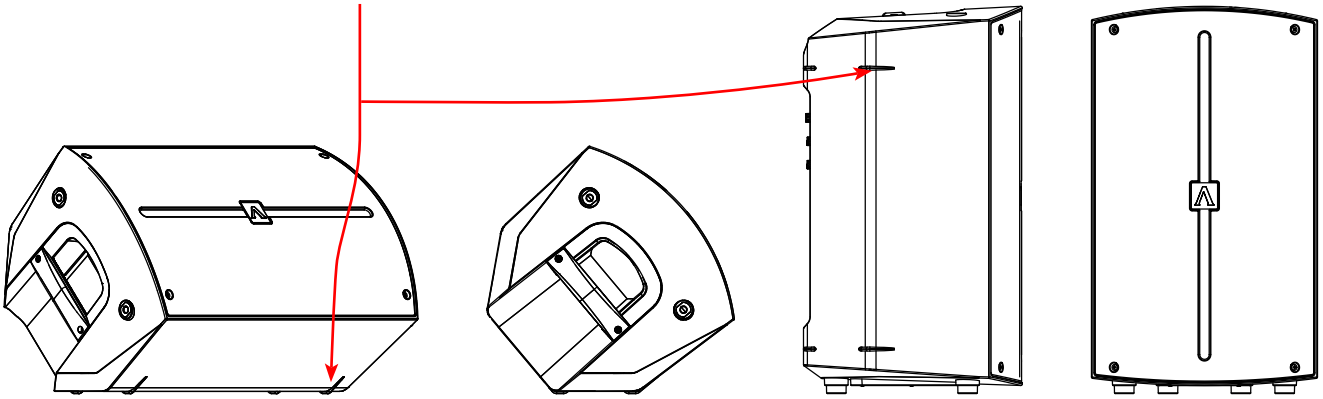

Eye-Bolt Hardware Kit (sold seperately)

For permanent flying installations, insert optional M10 Eye Bolts into the 3 integrated threaded inserts on the speaker, two on top and one at the bottom of back panel.

CAUTION!
DO NOT OVERTIGHTEN EYE BOLTS!

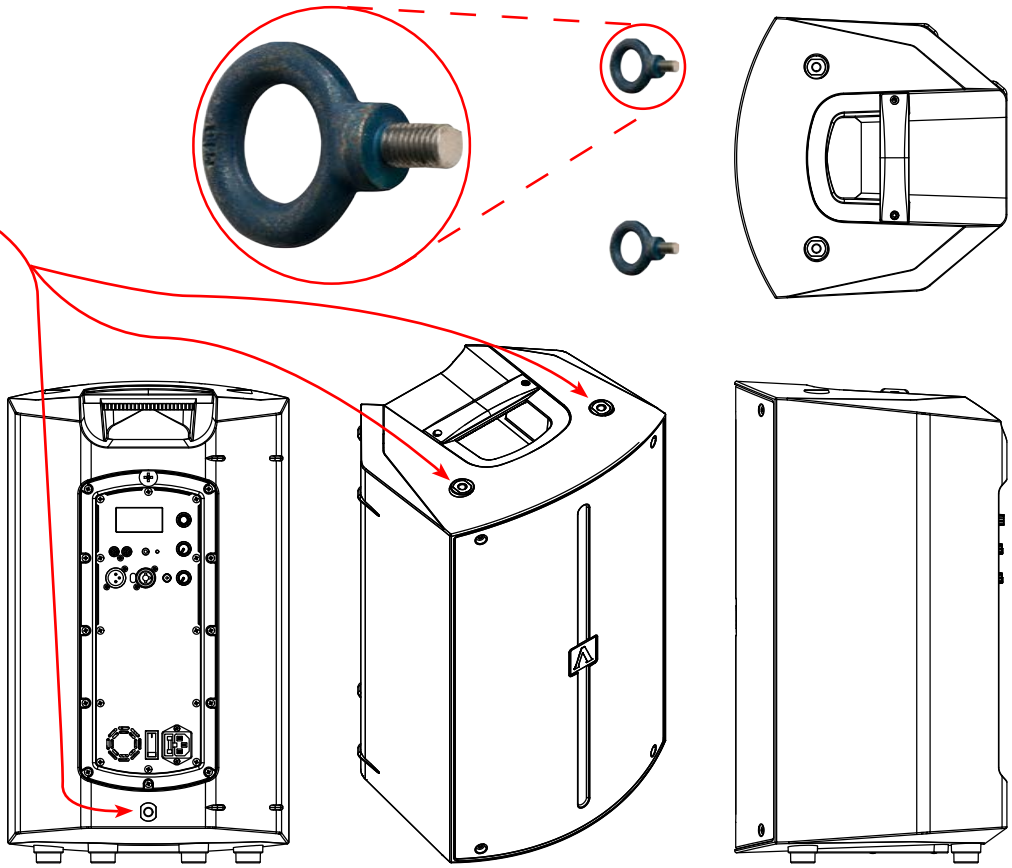

INSTALLATION

Wall Mount Bracket (sold seperately)

For permanent wall installations, attach the optional Wall Mount Bracket to a flat wall surface using appropriate hardware (not included).

CONSULT A PROFESSIONAL INSTALLER BEFORE ATTEMPTING TO INSTALL WALL MOUNT BRACKETS!

Place speaker onto the wall mount bracket by inserting speaker pole into the bottom mounting hole.

Adjust the speaker position accordingly.

INSTALLATION

Subwoofer Pole-Mounted Speakers

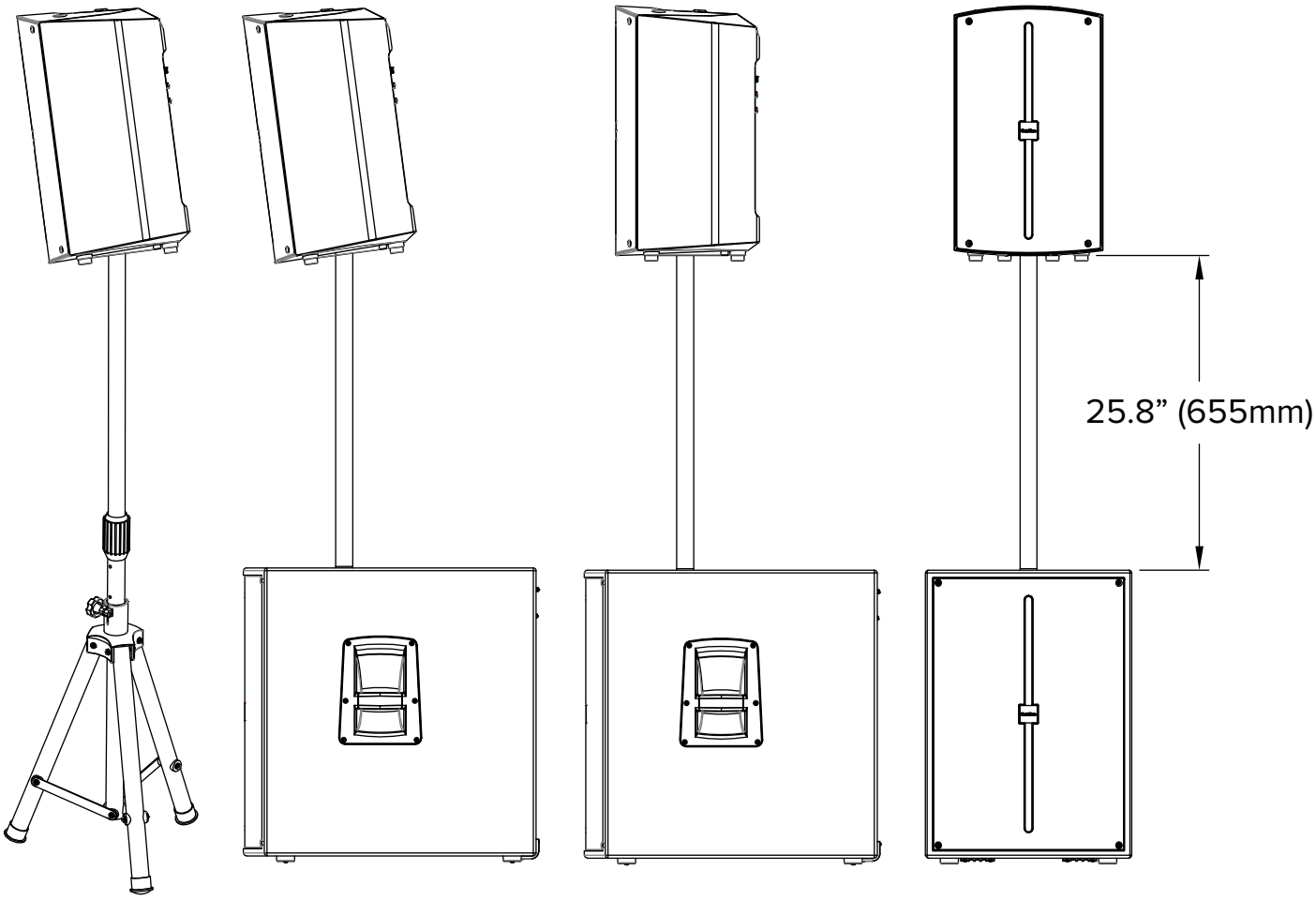

INSTALLATION

Speakers can be tilted forward 7.5° to adjust for venue dependent acoustics.

Rotating Avante Icon

Speakers can be tilted forward 7.5° to adjust for venue dependent acoustics.

DSP OPERATION

1. Press encoder knob to access setting menus.
2. Rotate encoder knob to scroll through setting menus.
3. Press encoder knob to select desired setting menu.
4. Rotate encoder knob to adjust setting to desired selection.
5. Push encoder knob to Save and Return.

	Level 1		Level 2			Level 3	
Channel 1	BT CONFIG ABOUT CH1 BT/AUX CH2 MIC MAIN 0dB	-->	CH1 BT/AUX HIGH 0dB MID 0dB LOW 0dB	Adjust the Sound			
Channel 2	BT CONFIG ABOUT CH1 BT/AUX CH2 LINE MAIN 0dB	-->	CH2 LINE HIGH 0dB MID 0dB LOW 0dB HPF 20HZ	Adjust the Sound			
Main Channel	BT CONFIG ABOUT CH1 BT/AUX CH2 LINE MAIN 0dB	-->	BT CONFIG ABOUT CH1 BT/AUX CH2 LINE MAIN 0dB	Adjust the Sound			
		--> Mode	MODE NORMAL LOCATION POLE DELAY OM/ OFT OUTPUT MIX OUT	Normal Mode			
			MODE SPEECH LOCATION POLE DELAY OM/ OFT OUTPUT MIX OUT	Speech Mode			
			MODE LIVE LOCATION POLE DELAY OM/ OFT OUTPUT MIX OUT	Live Mode			
			MODE CLUB LOCATION POLE DELAY OM/ OFT OUTPUT MIX OUT	Club Mode			
		--> Usage	MODE NORMAL LOCATION POLE DELAY OM/ OFT OUTPUT MIX OUT	Use Pole			
			MODE NORMAL LOCATION MONITOR DELAY OM/ OFT OUTPUT MIX OUT	Used As Monitor			
			MODE NORMAL LOCATION BRACKET DELAY OM/ OFT OUTPUT MIX OUT	Use Bracket			

DSP OPERATION

	Level 1		Level 2			Level 3	
Main Channel	BT CONFIG ABOUT CH1 BT/AUX CH2 LINE MAIN 0dB	--> Delay	MODE NORMAL LOCATION POLE DELAY 0M/ 0FT OUTPUT MIX OUT	No Delay			
			MODE NORMAL LOCATION POLE DELAY 1M/ 3FT OUTPUT MIX OUT	1M/3ft Delay --> 10M/33ft Delay			
			MODE NORMAL LOCATION POLE DELAY 2M/ 6FT OUTPUT MIX OUT				
			MODE NORMAL LOCATION POLE DELAY 3M/ 9FT OUTPUT MIX OUT				
			MODE NORMAL LOCATION POLE DELAY 4M/13FT OUTPUT MIX OUT				
			MODE NORMAL LOCATION POLE DELAY 5M/16FT OUTPUT MIX OUT				
			MODE NORMAL LOCATION POLE DELAY 6M/19FT OUTPUT MIX OUT				
			MODE NORMAL LOCATION POLE DELAY 7M/23FT OUTPUT MIX OUT				
			MODE NORMAL LOCATION POLE DELAY 8M/26FT OUTPUT MIX OUT				
			MODE NORMAL LOCATION POLE DELAY 9M/29FT OUTPUT MIX OUT				
			MODE NORMAL LOCATION POLE DELAY 10M/33FT OUTPUT MIX OUT				

DSP OPERATION

	Level 1		Level 2			Level 3	
Main Channel	BT CONFIG ABOUT CH1 BT/AUX CH2 LINE MAIN 0dB	--> Output	MODE NORMAL LOCATION POLE DELAY 1M/ 3FT OUTPUT MIX OUT	Mix Out			
			MODE NORMAL LOCATION POLE DELAY 1M/ 3FT OUTPUT LINK OUT	Link Out			
Bluetooth	BT CONFIG ABOUT CH1 BT/AUX CH2 LINE MAIN 0dB	--> App Control	BT APP CONTROL OFF STREAMING OFF LINK	App Control Off			
			BT APP CONTROL ON STREAMING OFF LINK	App Control On			
			BT APP CONTROL ON STREAMING OFF CANCEL	App Control On, TWS Off			
			BT APP CONTROL SECONDARY STREAMING OFF	Used as a Secondary Speaker			
		--> Streaming	BT APP CONTROL OFF STREAMING OFF LINK	Streaming Off			
			BT APP CONTROL OFF STREAMING ON LINK	Streaming On			

DSP OPERATION

	Level 1		Level 2			Level 3	
Bluetooth	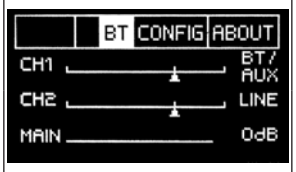	--> TWS Function	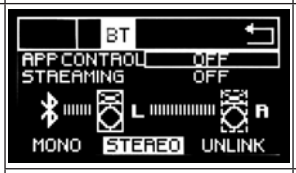	TWS Stereo On, Used As Left Channel			
				TWS Stereo On, Used As Right Channel			
				TWS Mono On			
				Used As Secondary Speaker TWS On			
				Unlink TWS			
				TWS Off			

DSP OPERATION

	Level 1		Level 2			Level 3	
Config	BT CONFIG ABOUT CH1 BT/AUX CH2 LINE MAIN 0dB	--> Standby Function	CONFIG STANDBY OFF AUTO LINK OFF FRONT LED ON	Standby Off			
			CONFIG STANDBY 2MINS AUTO LINK OFF FRONT LED ON	Standby 2 Mins --> 30 Mins			
			CONFIG STANDBY 5MINS AUTO LINK OFF FRONT LED ON				
			CONFIG STANDBY 10MINS AUTO LINK OFF FRONT LED ON				
			CONFIG STANDBY 20MINS AUTO LINK OFF FRONT LED ON				
			CONFIG STANDBY 30MINS AUTO LINK OFF FRONT LED ON				
		--> Auto Link	CONFIG STANDBY OFF AUTO LINK OFF FRONT LED ON	Auto Link Off			
			CONFIG STANDBY OFF AUTO LINK ON FRONT LED ON	Auto Link On: TWS Starts After Power On			
		--> Front LED	CONFIG STANDBY OFF AUTO LINK ON FRONT LED ON	Front LED On			
			CONFIG STANDBY OFF AUTO LINK ON FRONT LED OFF	Front LED Off			
			CONFIG STANDBY OFF AUTO LINK ON FRONT LED LIMIT	Front LED Limit. Too Loud, Red Light. Normal Sound, White Light.			
About	BT CONFIG ABOUT CH1 BT/AUX CH2 LINE MAIN 0dB	-->	ABOUT A12X Version: 1.0.0 RESTORE		-->	ABOUT ARE YOU SURE RETURN THE DEVICE TO ITS FACTORY DEFAULT SETTING NO YES PUSH TO SAVE AND EXIT	Restore factory settings.

APPLICATION CONTROL

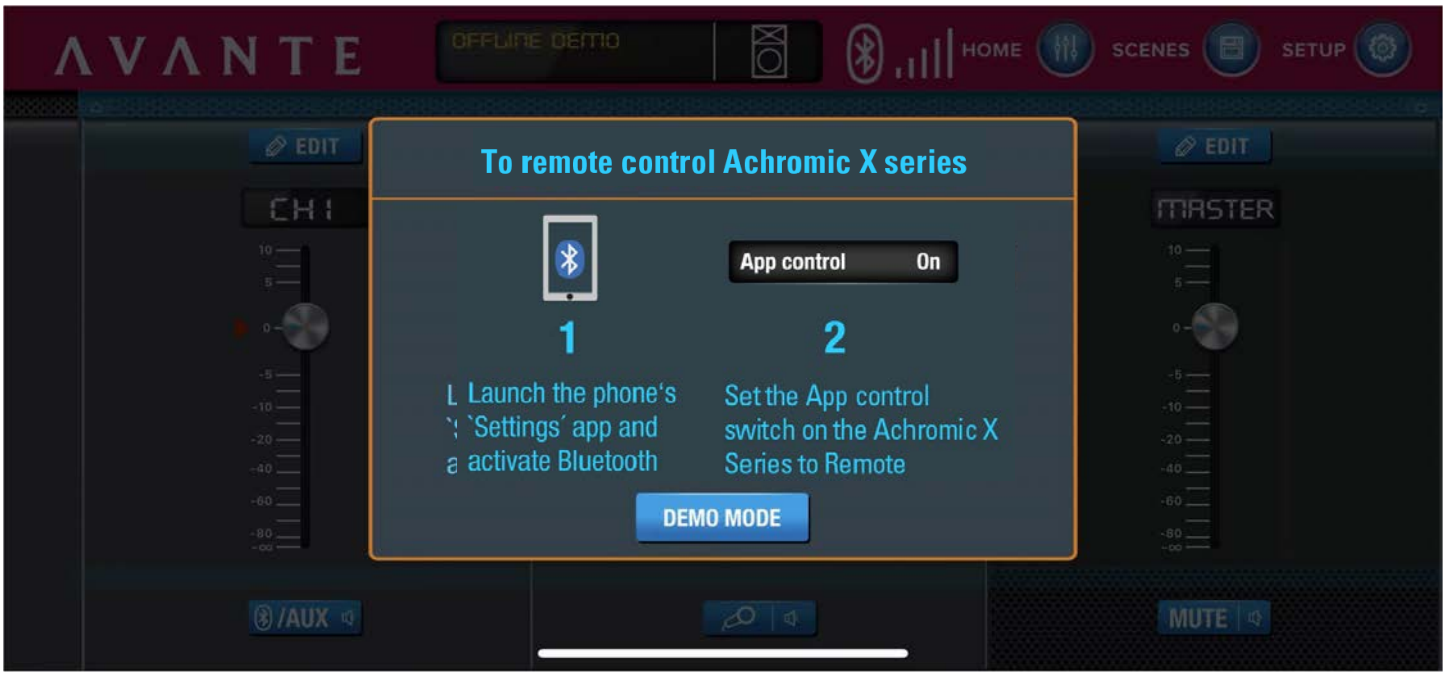

Entry Page

Main page: adjust the volume of each Channel, or mute.

APPLICATION CONTROL

Click **EDIT** above **Channel 1**.

Channel 1 Page: adjust the volume and EQ of Channel 1. Note that the Master Volume can also can adjusted here.

APPLICATION CONTROL

Click **EDIT** above **Channel 2**.

Channel 2 Page: adjust the volume and EQ of Channel 2. Note that the Master Volume can also be adjusted here.

APPLICATION CONTROL

Click **EDIT** above **Master Channel**

Master Channel Page: adjust the volume, mode, Location, delay, and output mode of 2 channels.

APPLICATION CONTROL

Click **SCENES**, located overhead right.

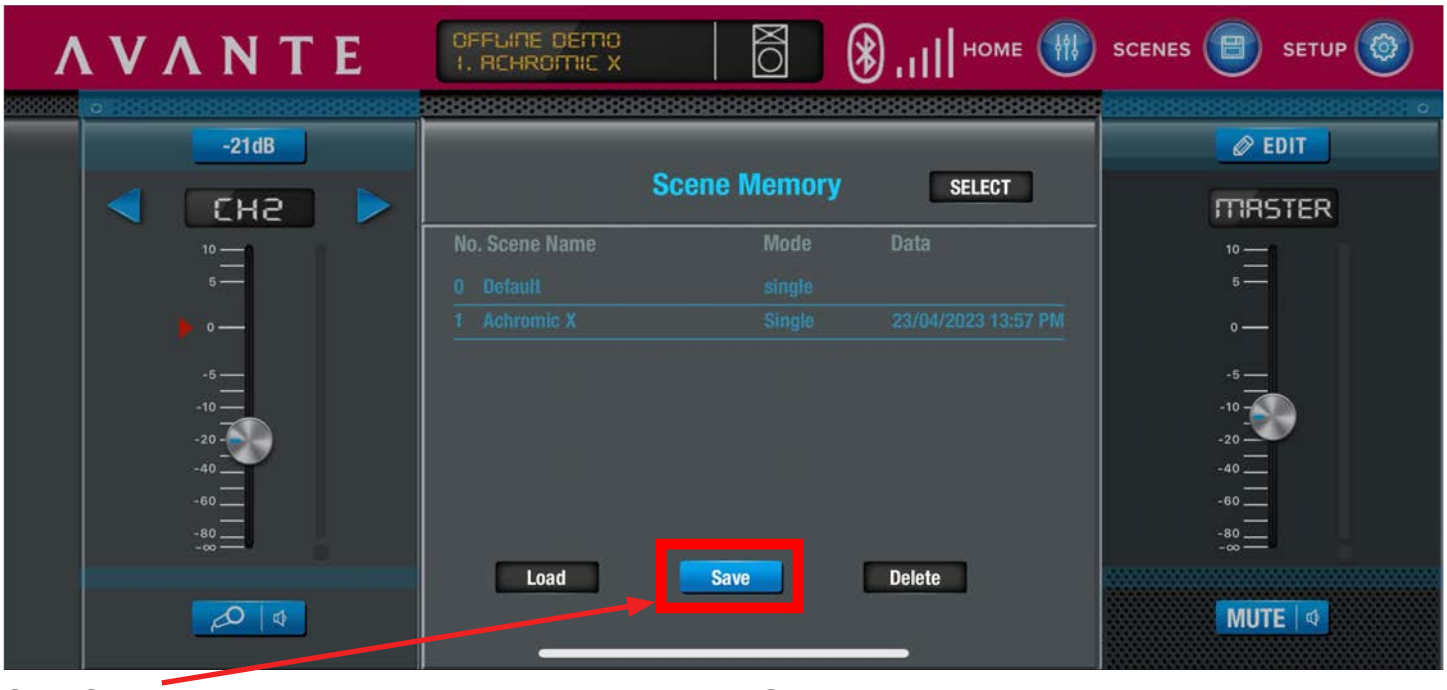

Click **Save** to save a new setting about the volume, EQ, and mode**.**

APPLICATION CONTROL

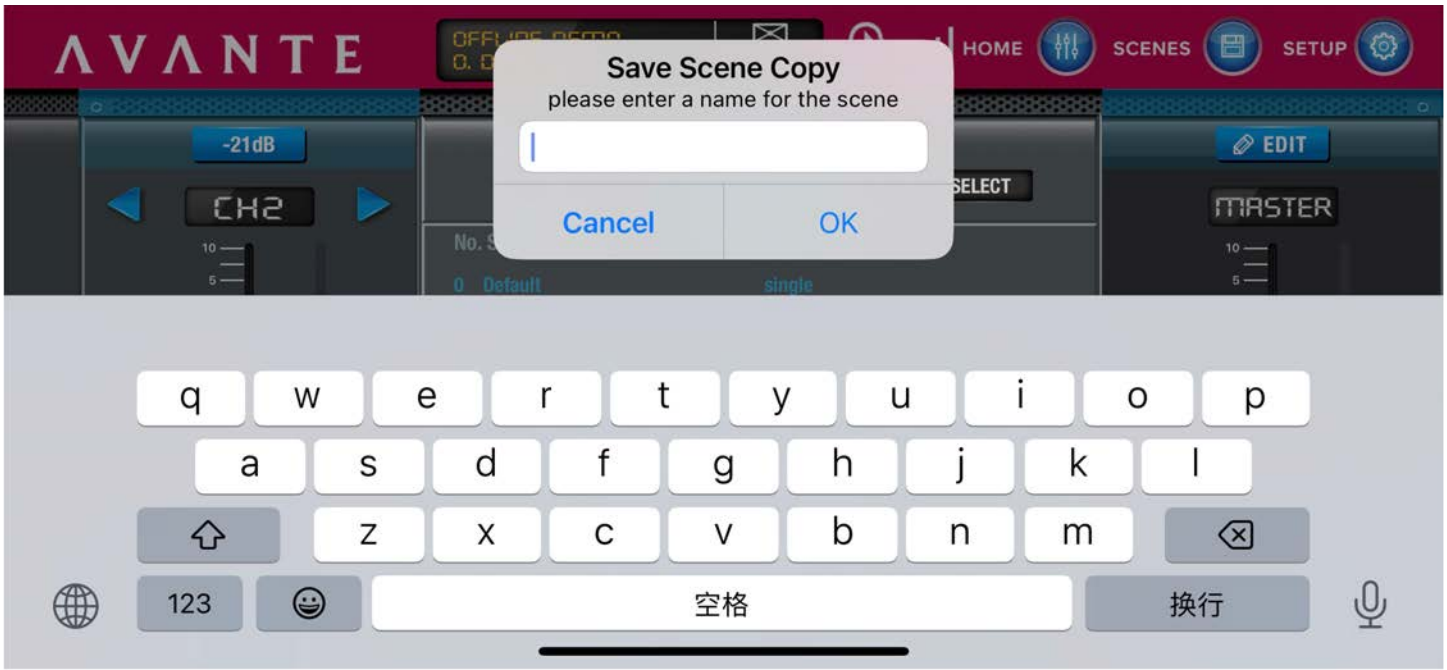

Name your new setting, then click **OK** to save, or **Cancel** to cancel.

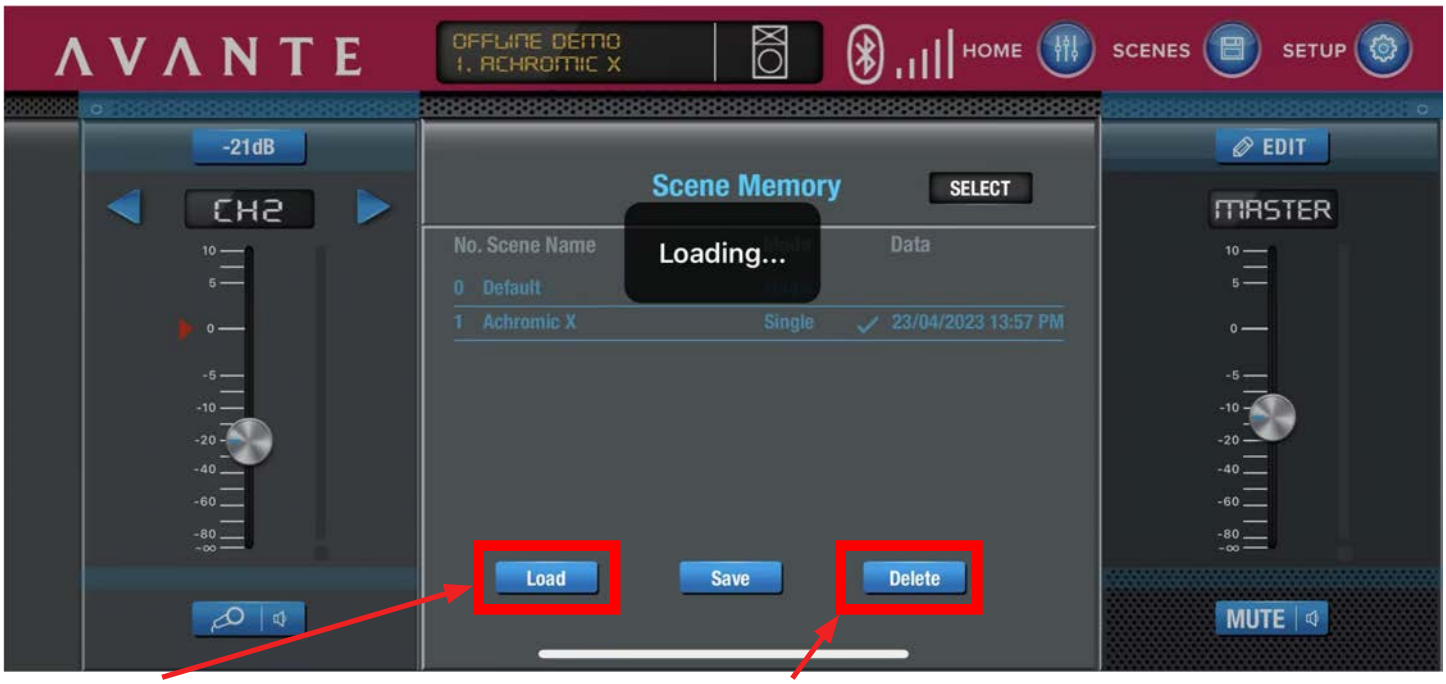

Click **Load** to use the chosen saved setting, or click **Delete** to delete the chosen setting.

APPLICATION CONTROL

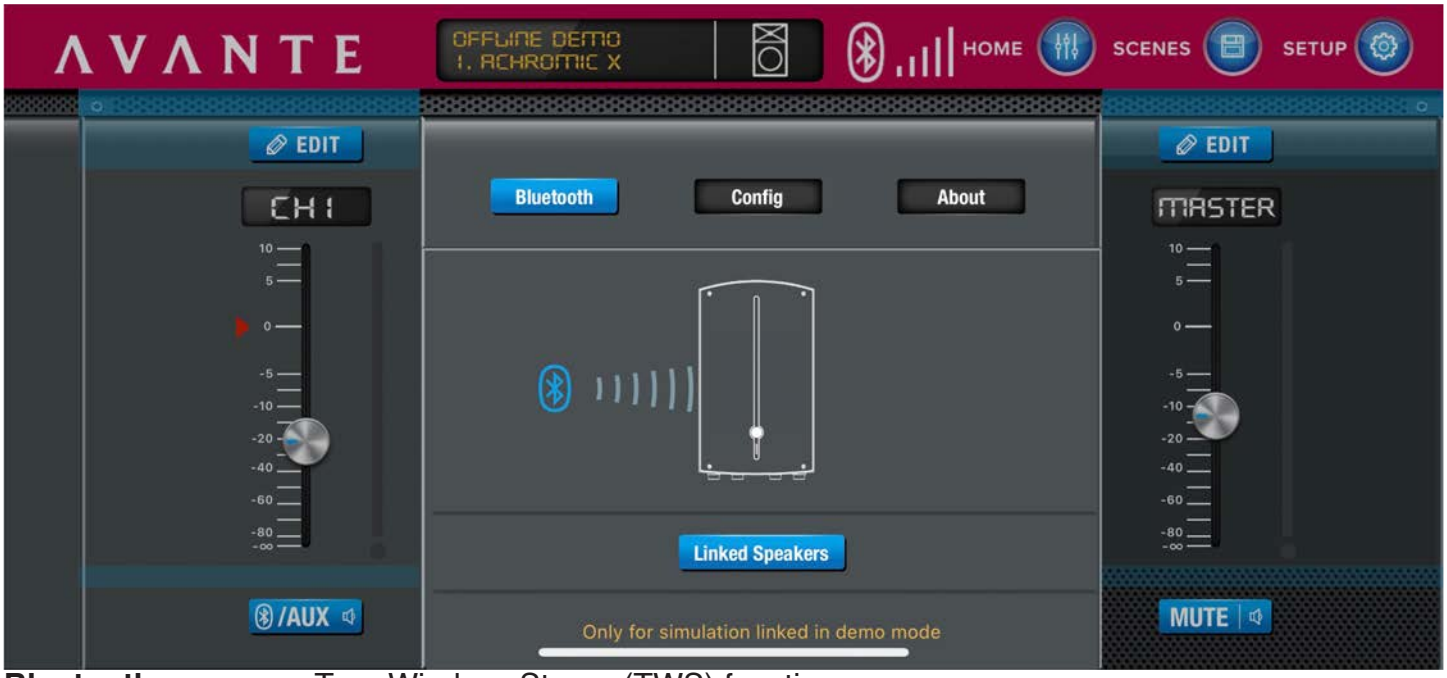

Bluetooth page: use True Wireless Stereo (TWS) function.

APPLICATION CONTROL

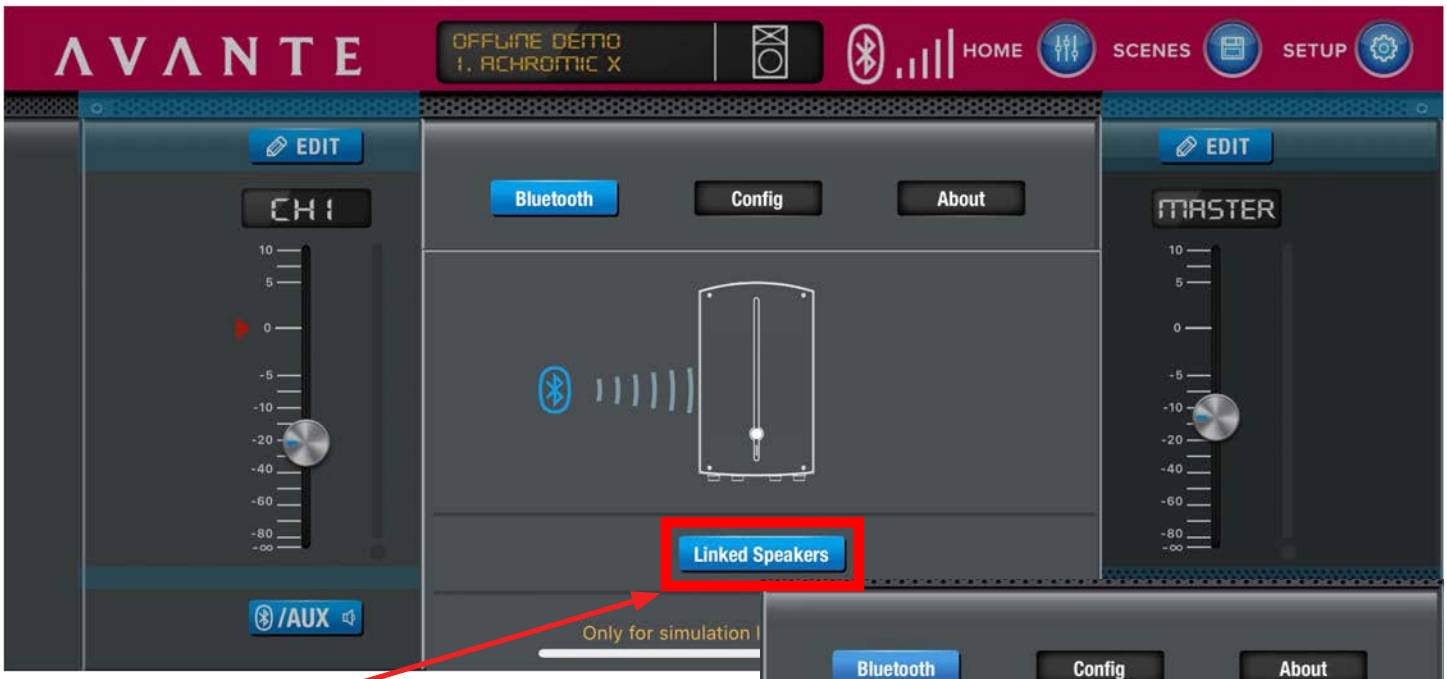

Click **Linked Speakers** and wait for a moment.

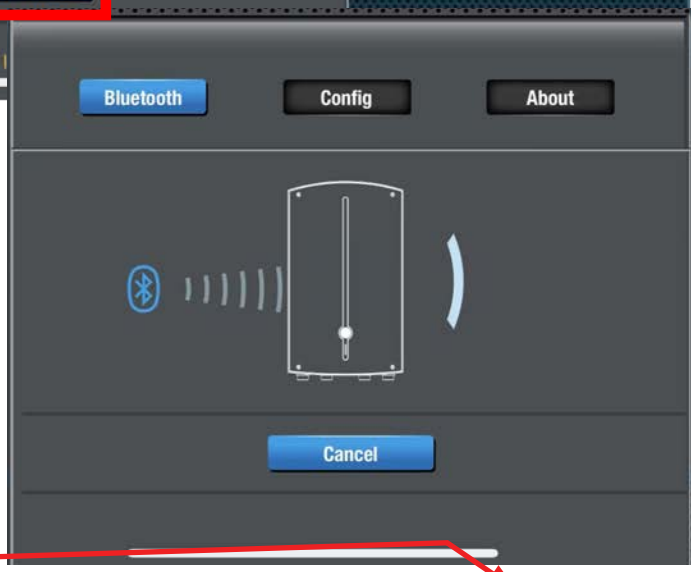

Adjust the volume of Channel 1 for two speakers, Channel 2 for each speaker, master Channel for two speakers.

Click **SETUP** overhead right.

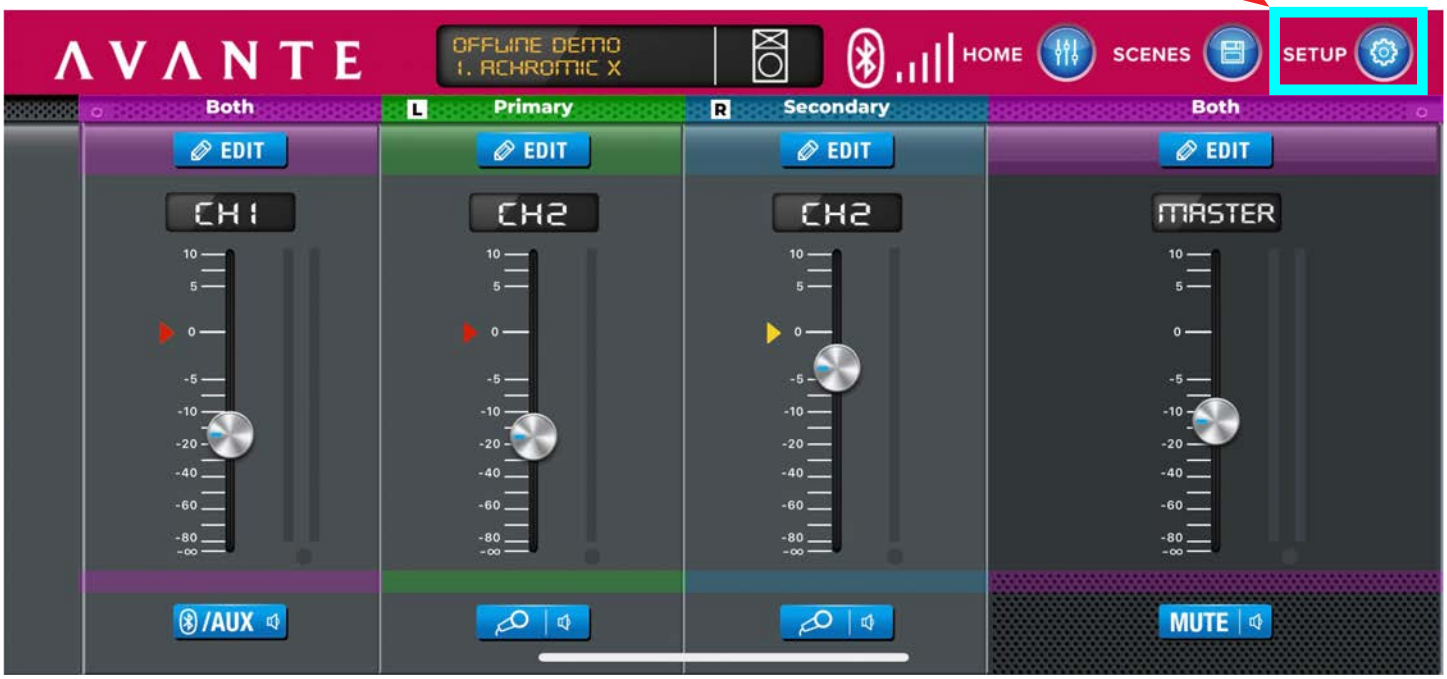

APPLICATION CONTROL

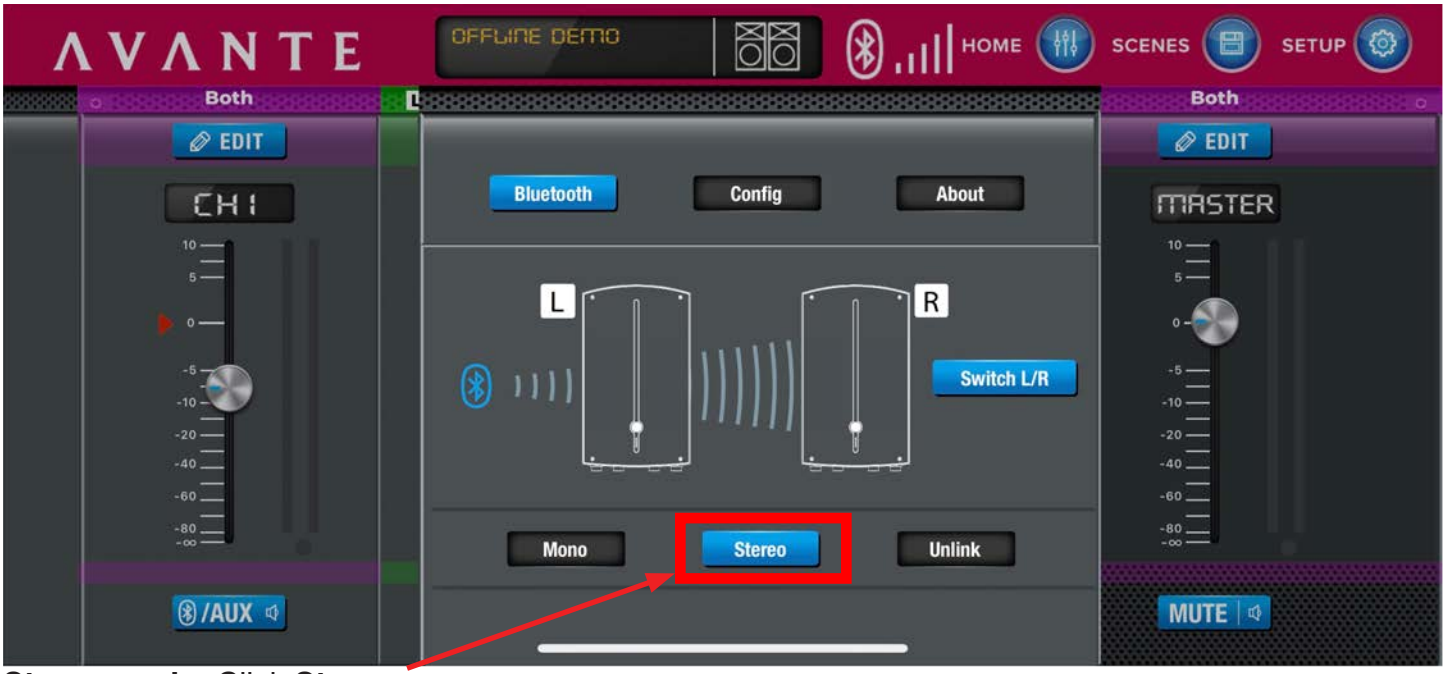

Stereo mode: Click **Stereo**

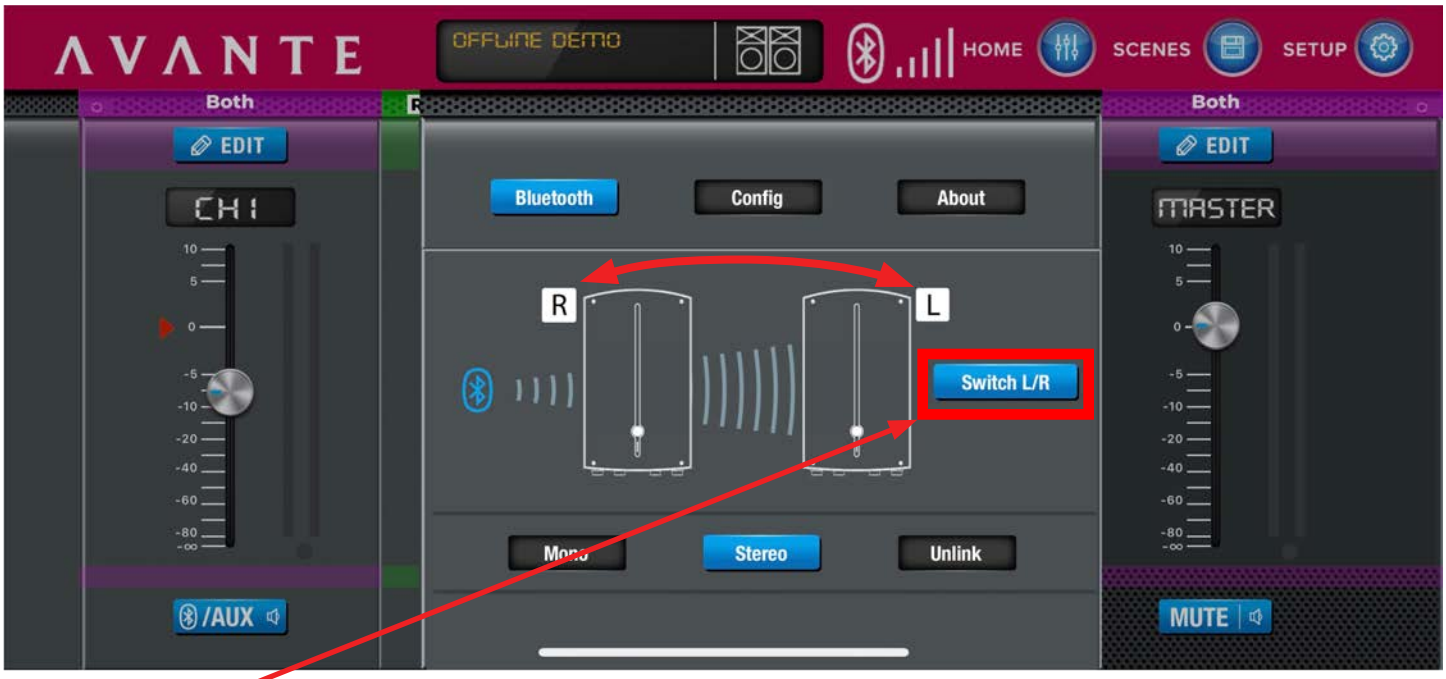

Click **Switch L/R** to flip left and right channels.

APPLICATION CONTROL

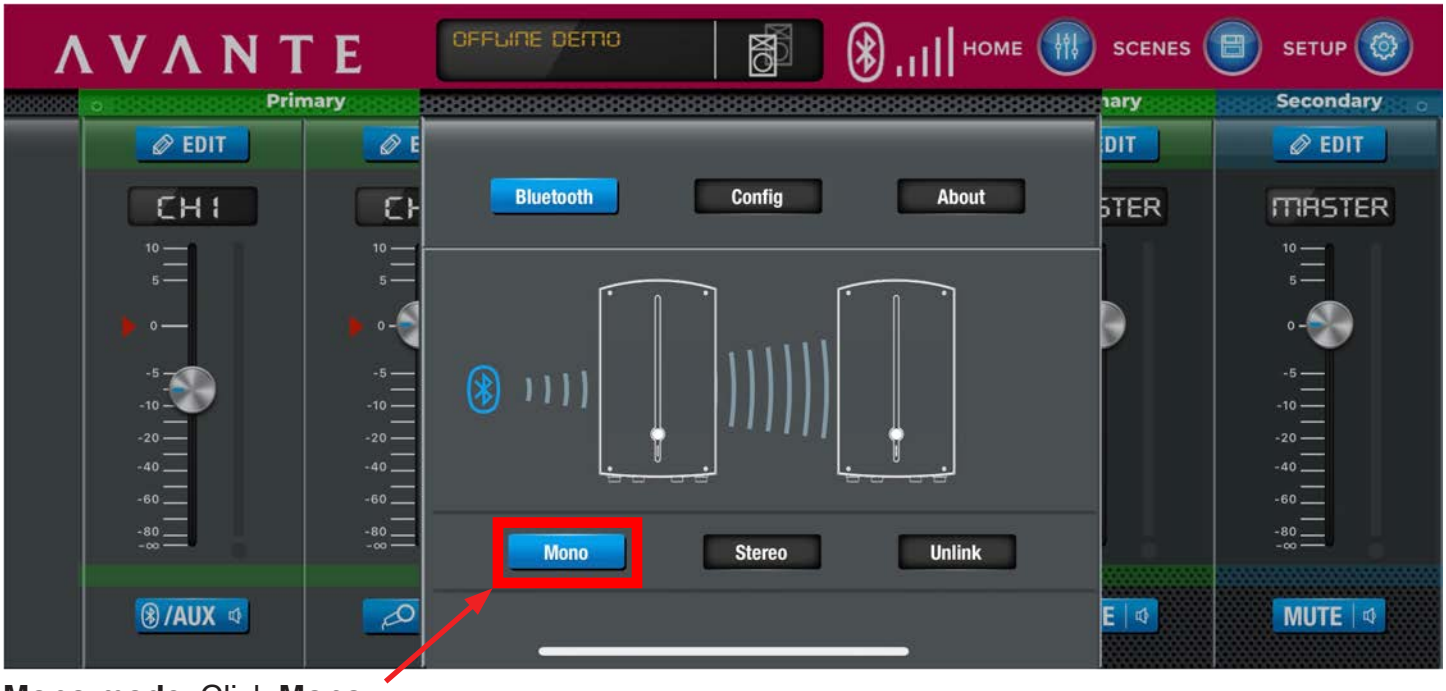

Mono mode: Click **Mono**.

Click any blank part. Adjust the volume of each channel.

APPLICATION CONTROL

Unlink: Click **Unlink**.

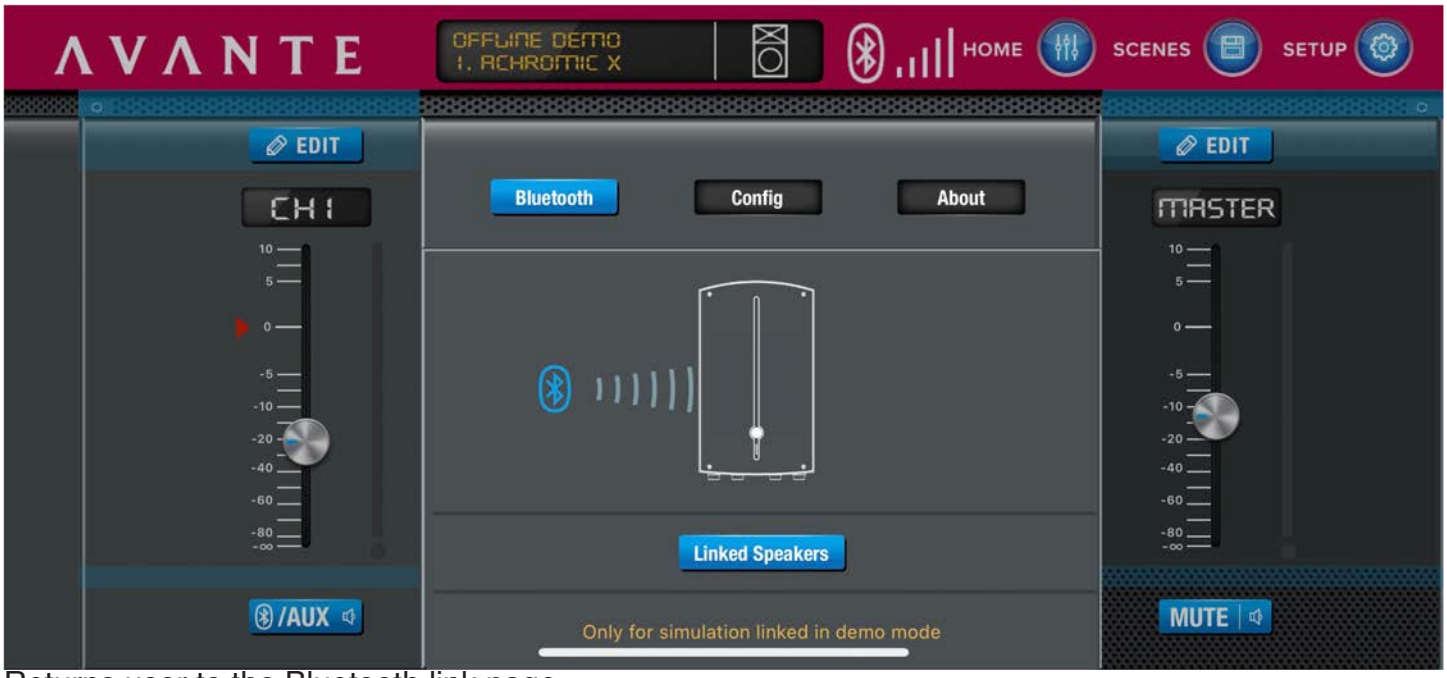

Returns user to the Bluetooth link page.

APPLICATION CONTROL

Click **SETUP** located overhead right.

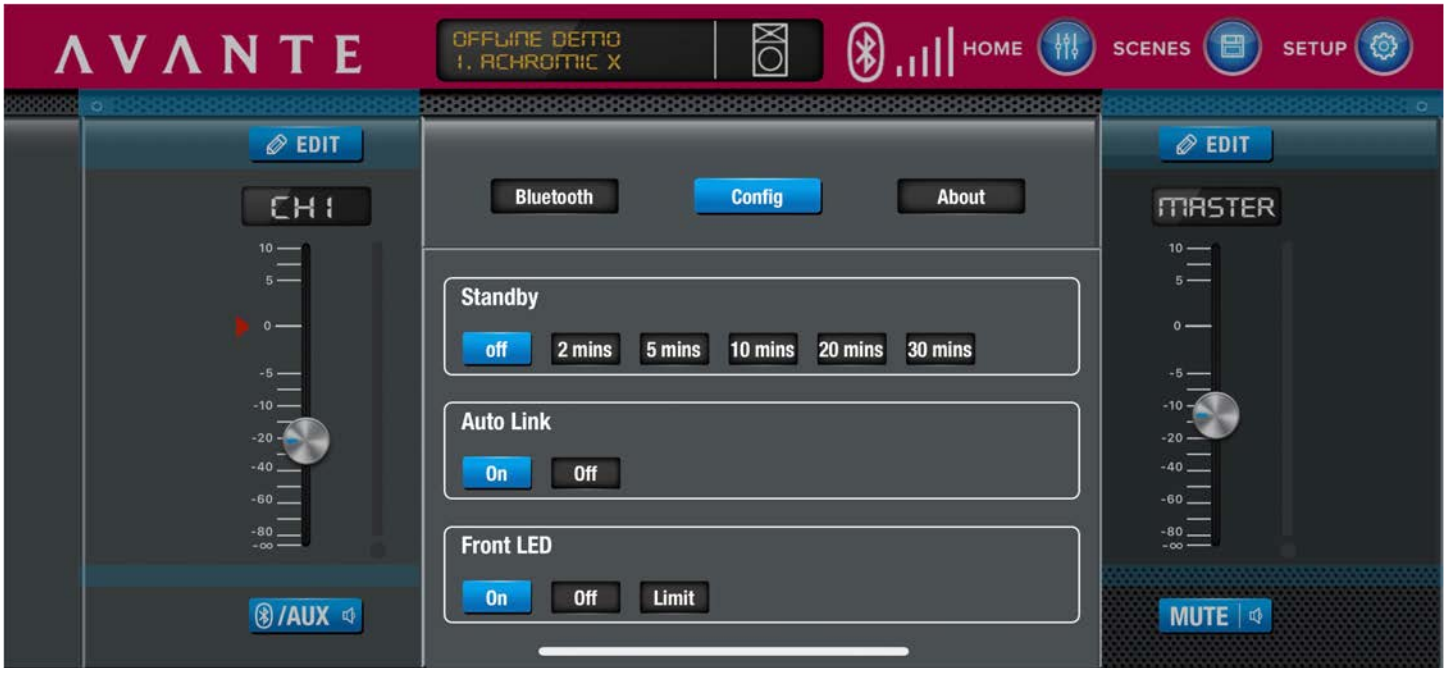

Config page: choose **Standby** time, **Auto link**, and **Front LED**.

APPLICATION CONTROL

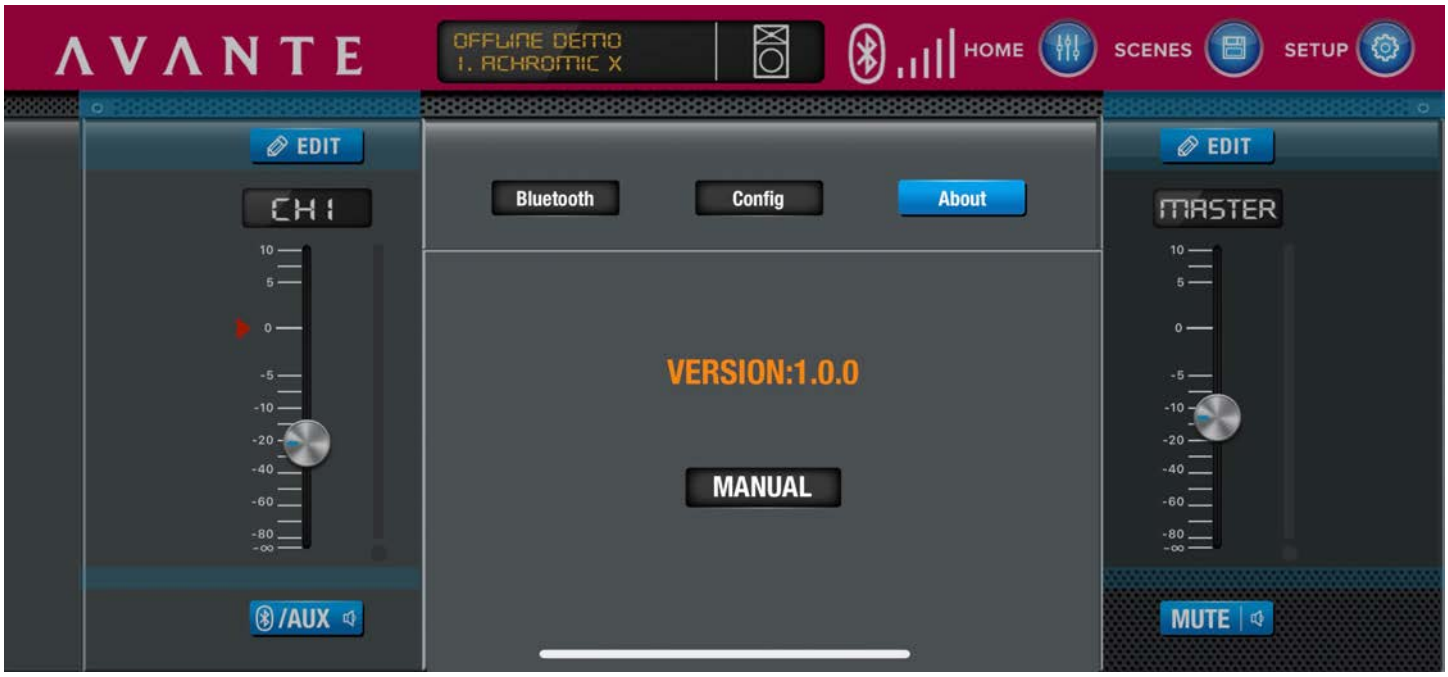

About page: lists current version and **MANUAL**.

APPLICATION DIAGRAMS

Multiple Input Options

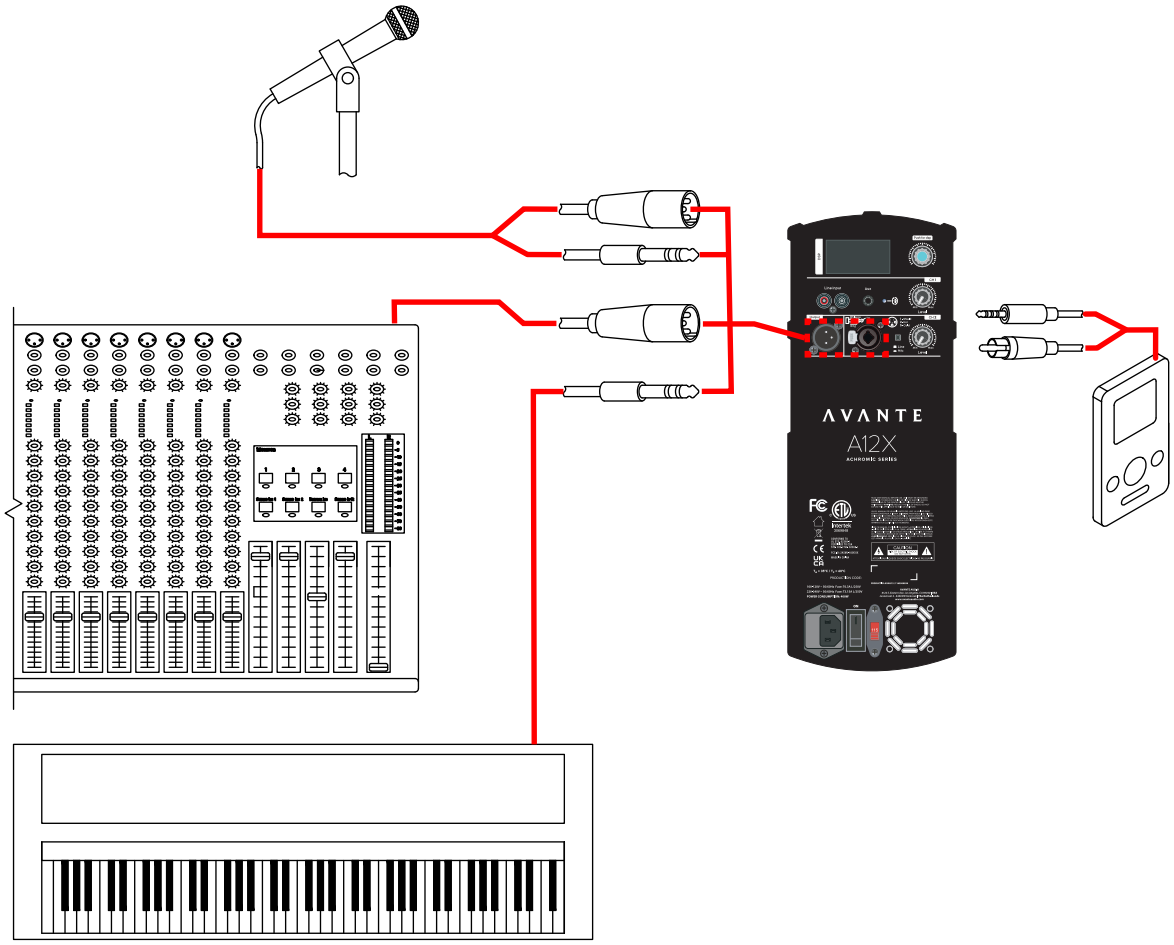

Two Daisy-Chained Loudspeakers

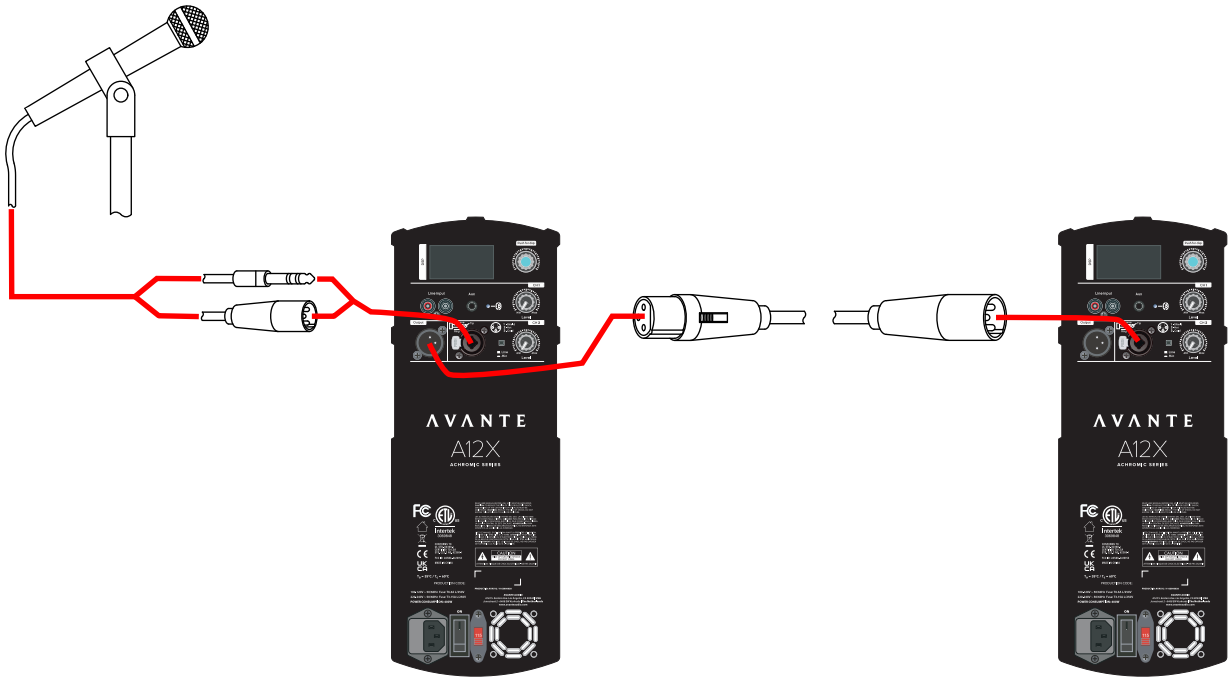

APPLICATION DIAGRAMS

Typical Stereo System

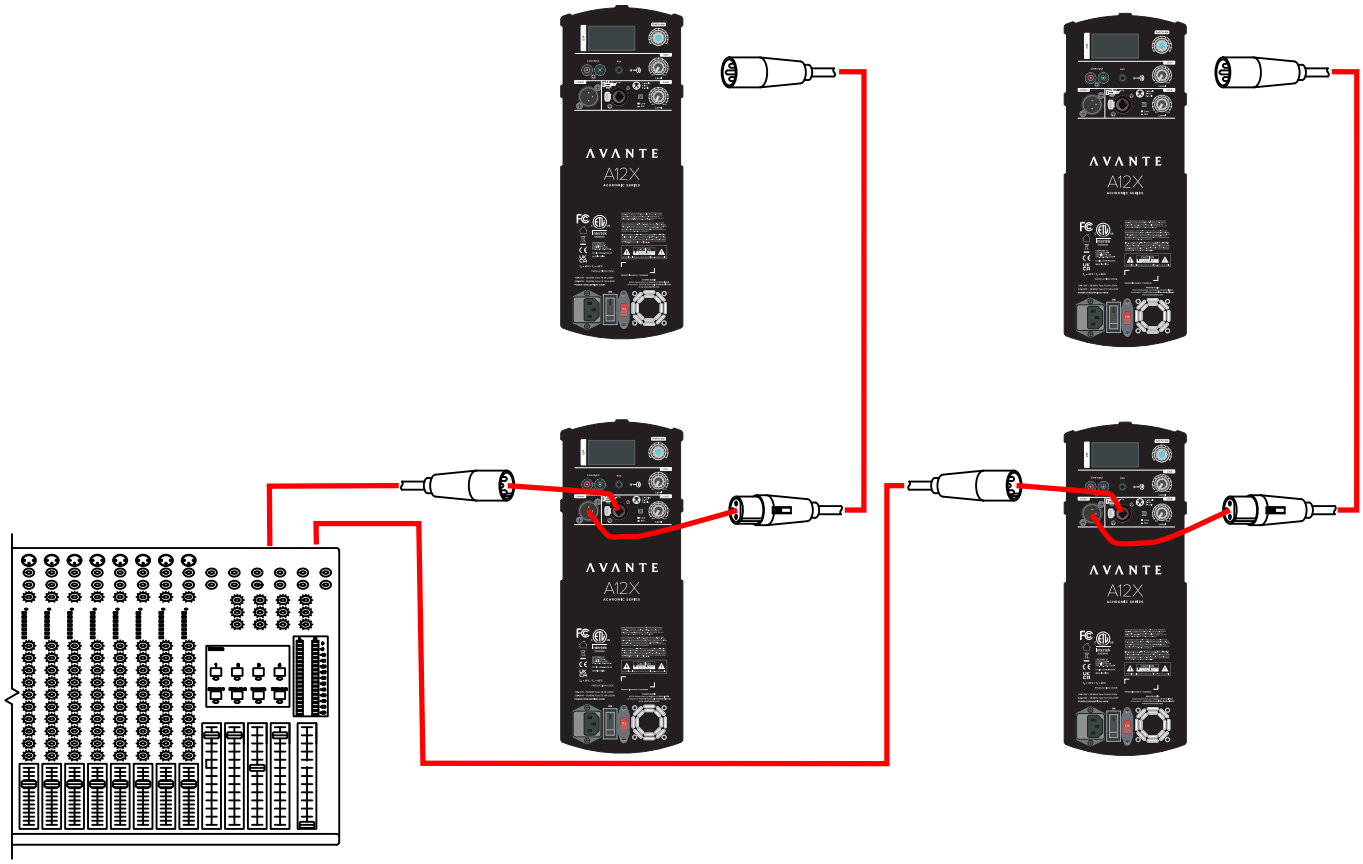

FREQUENCY CHARTS

A12X - SPL VS. FREQ CHARTS

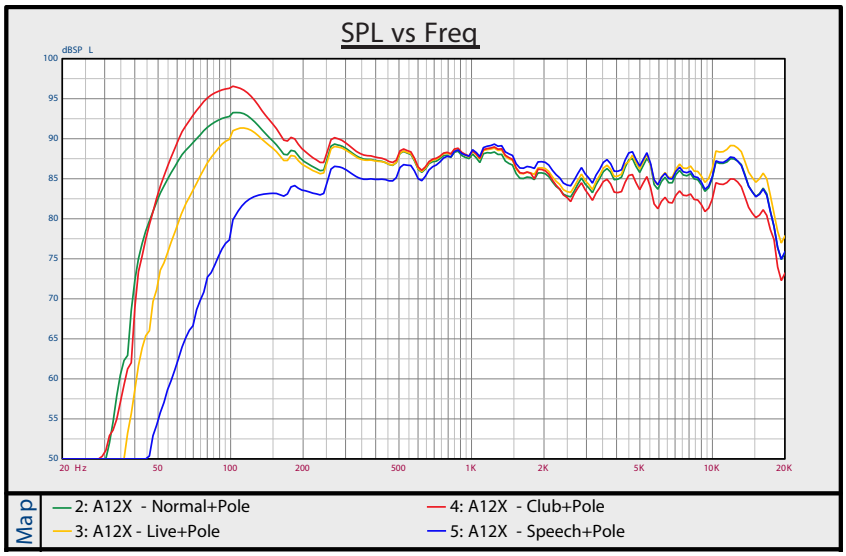

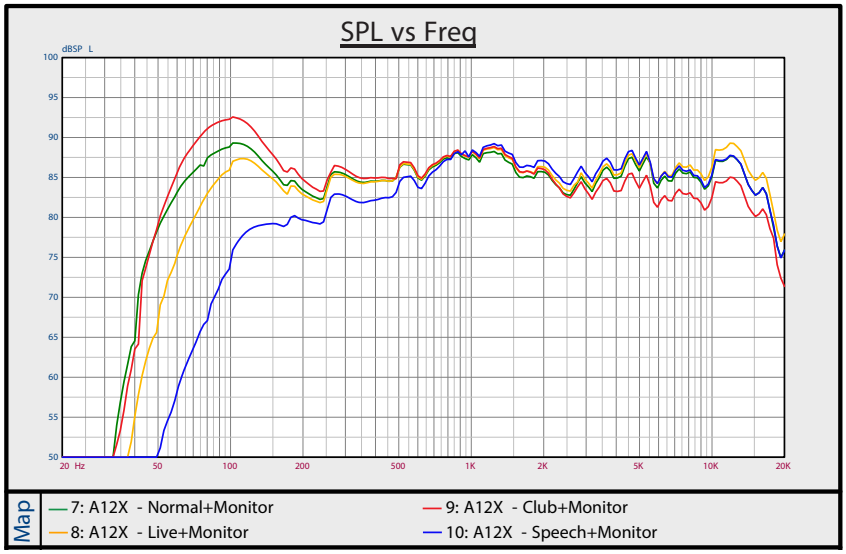

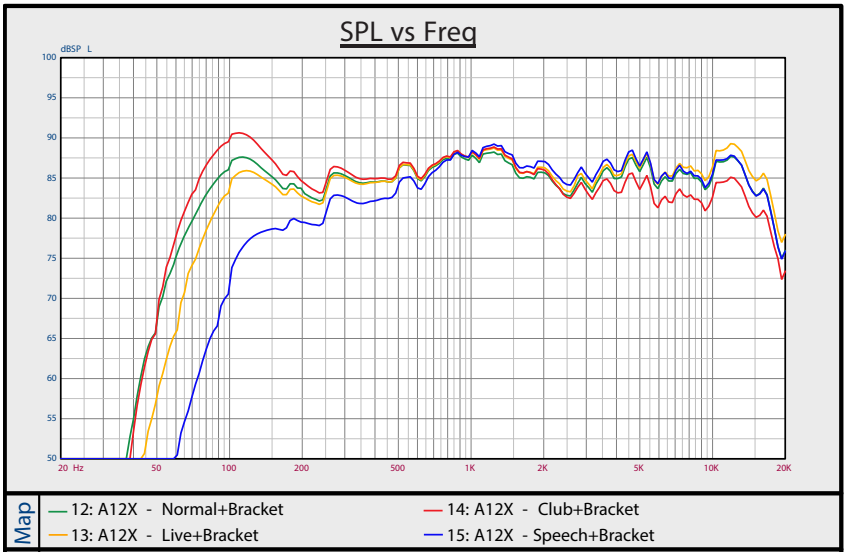

SPECIFICATIONS

- Amp Power: 1200W Peak; 350W Class D (LF) + 50W Class AB (HF) RMS
- Built-in Digital Signal Processing (DSP) with LCD screen, EQ & multiple presets. IOS APP for remote control of settings.
- BlueTooth 5.0+ Stereo Pairing
- Frequency Range: 60hz-20kHz
- Output (Peak SPL @ 1m): 123dB
- Nominal Coverage: 90˚ x 60˚
- Drivers: 12-inch woofer with 2.5-inch voice coil + 1.35-inch HF Compression Driver
- Inputs: Balanced Female XLR ¼-inch combo jack, 2x RCA (phono)
- Output: Balanced Male XLR
- Enclosures: H-PP Molded
- Grill: 1.2mm Steel
- Handles: 1 on top / 1 on side
- Fly Points: 2 on top / 1 on back
- Pole Mounting: Dual position 0-degrees or 7.5-degrees
- Power Input: 120V/60Hz or 240V/50Hz (country specific)
- Power Consumption: 400W
- Dimensions: 24.7” x 14.4” x 14.0” / 628mm x 365mm x 355mm
- Weight: 35 lbs. / 15.9 kg.

DIMENSIONAL DRAWINGS

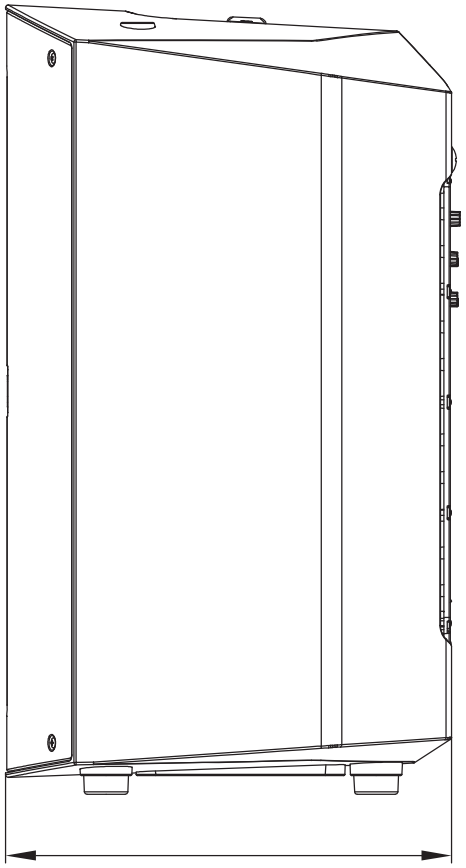

14.0 in (355mm)

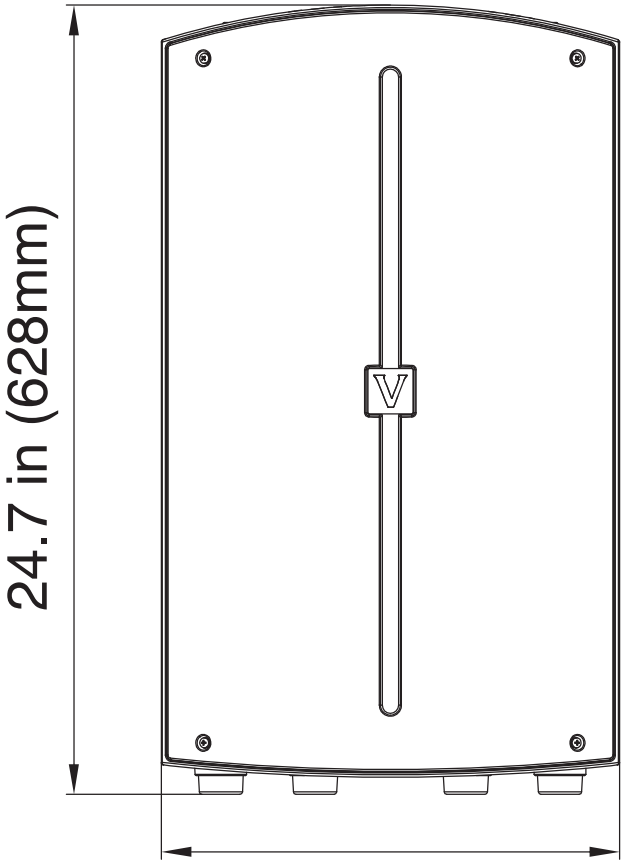

14.4 in (365mm)

COMPONENTS & ACCESSORIES

SKU	DESCRIPTION
A12X COVER	ACHROMIC A12 BLACK PADDED SLIP ON COVER
A12X-TOTE	ACHROMIC A12 TOTE BAG
Z-M10-58	M10 EYE BOLT - Single
Z-M10-58-3	M10 EYE BOLTS - 3-Pack
WMB001	AVANTE Wall Mount Bracket (2)

FCC STATEMENT

This device complies with Part 15 of the FCC Rules. Operation is subject to the following two conditions: (1) this device may not cause harmful interference, and (2) this device must accept any interference received, including interference that may cause undesired operation.

FCC RADIO FREQUENCY INTERFERENCE WARNINGS & INSTRUCTIONS

This product has been tested and found to comply with the limits as per Part 15 of the FCC Rules. These limits are designed to provide reasonable protection against harmful interference in a residential installation. This device uses and can radiate radio frequency energy and, if not installed and used in accordance with the included instructions, may cause harmful interference to radio communications. However, there is no guarantee that interference will not occur in a particular installation. If this device does cause harmful interference to radio or television reception, which can be determined by turning the device off and on, the user is encouraged to try to correct the interference by one or more of the following methods:

- Reorient or relocate the device.
- Increase the separation between the device and the receiver.
- Connect the device and the radio receiver to electrical outlets on separate electrical circuits.
- Consult the dealer or an experienced radio/TV technician for help.

Warning: changes or modifications not expressly approved by the party responsible for compliance could void the user's authority to operate the equipment

The devices has been evaluated to meet general RF exposure requirement， the device can be used in portable exposure condition without restriction