PLEVO®

UP

User Guide

Welcome to the PLEVO family

www.plevo.co

Table of Contents

Product
01- Product external parts

Removable battery
02- Parts and features
03- Installation
04- Extraction method

Removable wheels
05- Installation
06- Dismantling

Mobile application and electronic lock
07- Components
08- Electronic lock (Morse code)
09- Electronic lock (Face ID/Touch ID)
10- Digital Scale
11- GPS

Airplane mode
12- Activation and disabling method

Communication
13-15- Lights and alerts indicators

Garment bag System
16- Components
17-19- Operation

UP

1

PRODUCT

PLEVO®

Outer parts of the suitcase

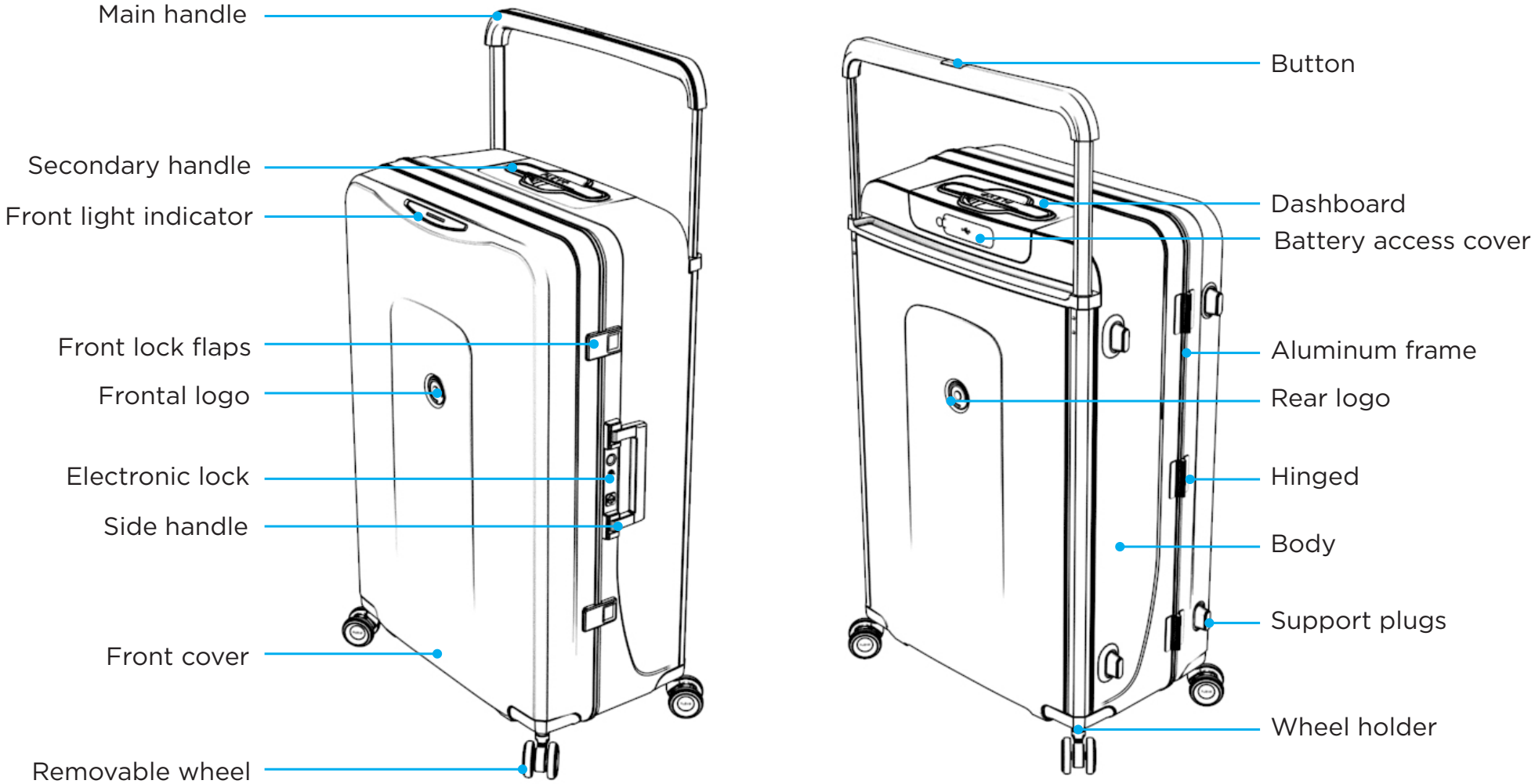

The images in this manual are illustrative and can vary with actual model.

2

REMOVABLE BATTERY

PLEVO®

Parts and characteristics

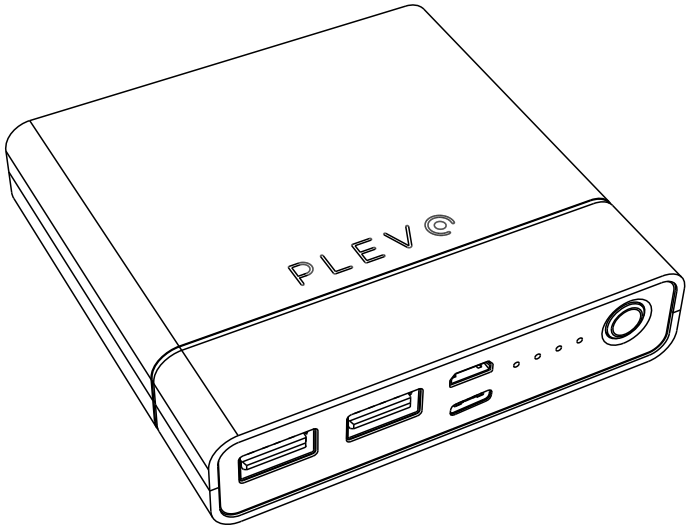

Characteristics:

Our energy bank with lithium-ion battery (8,000 mah) is fully removable from PLEVO baggage.

-Dimensions: 85.5 x 84 x 21 mm
-Capacity: 8000 Mah/29.6 WH
-Input (Micro): 5v/3a 9v/2a
-Input (C-type): 5v/3a 9v/2a
-type-C output 5v/3a 9v/2a 12v/1.5 A-QC 3.0 output: 5v/3a 9v/2a 12v/1.5 A
-USB output: 5v/3a
-Total output: 18w MAX

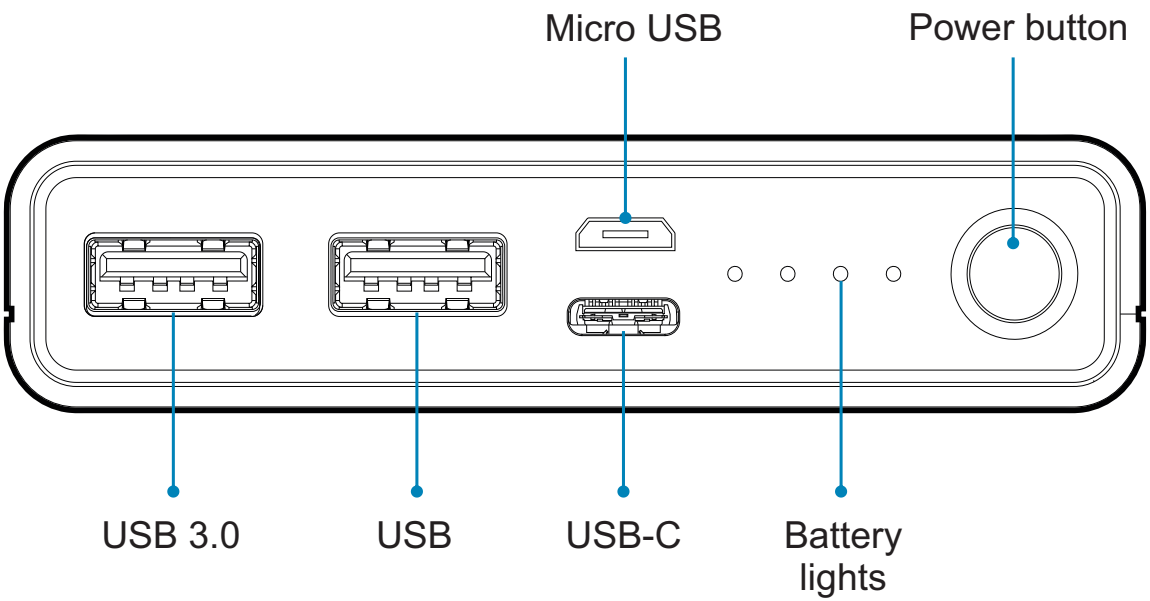

Installation

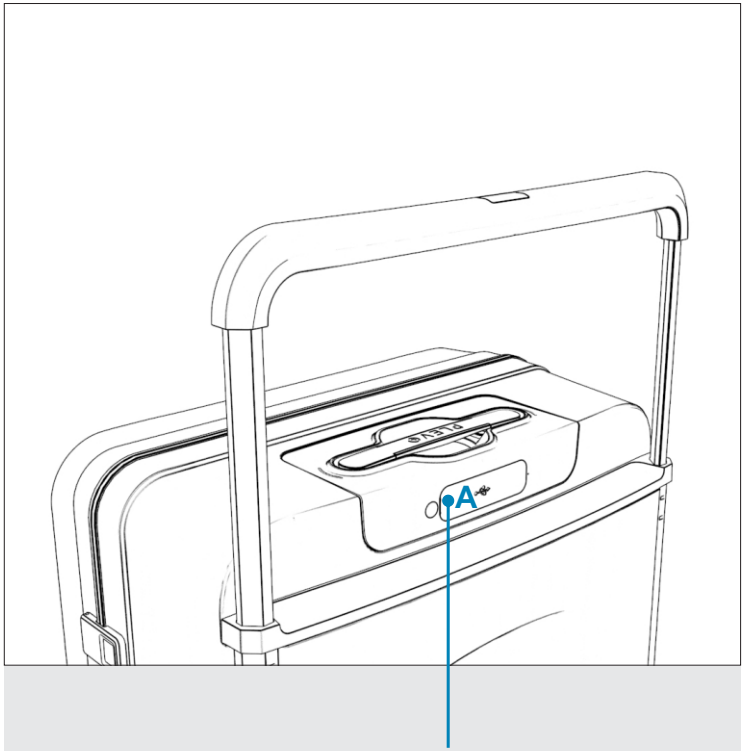

To install the energy bank, it is necessary to access the **"A"** cover on the back of the board and open it by rotating it downwards. This cover protects internal components from shocks, dust, and water so it is recommended that it is always closed while the battery is not in use.

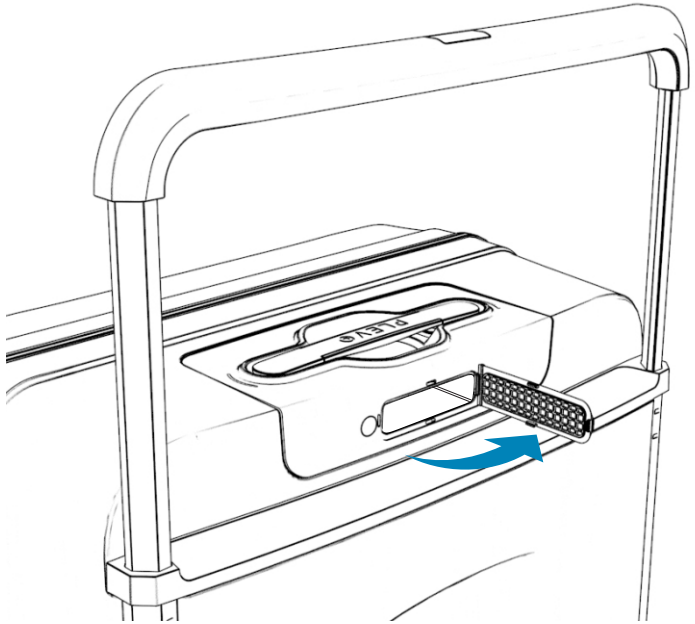

Picture 1

Open the rubber cover to the right to access the internal compartment of the board .

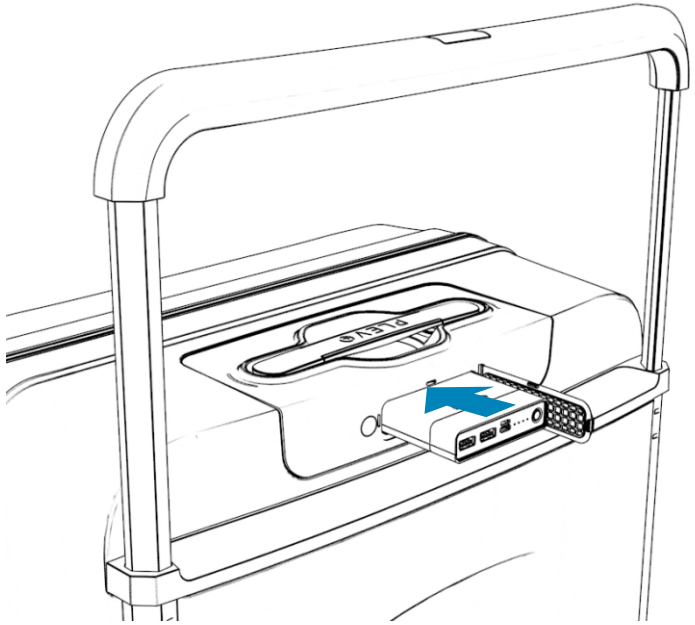

Picture 2

Position the battery horizontally and press forward until the mechanism locks and the element is anchored.

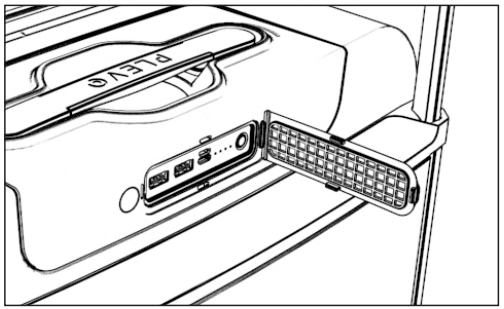

Extraction method

BATTERY BACKUP

Our system has a nickel-ion back-up battery of less than 600mAh and its weight is 39g (2.16 Wh). This battery feeds THE WHOLE suitcase when the removable battery is not installed on it.

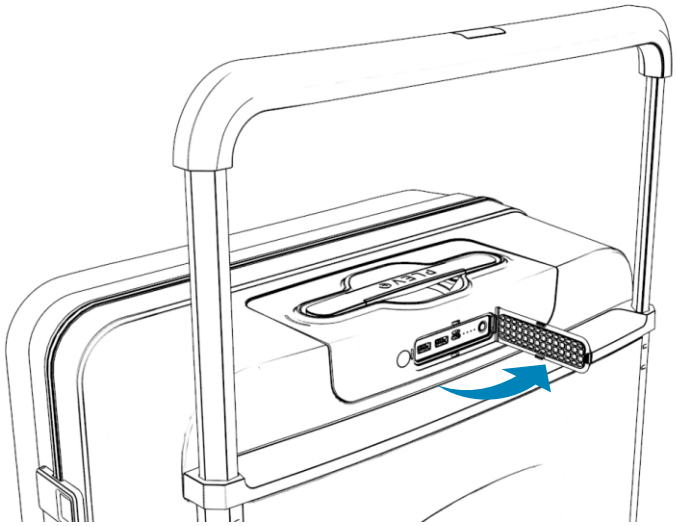

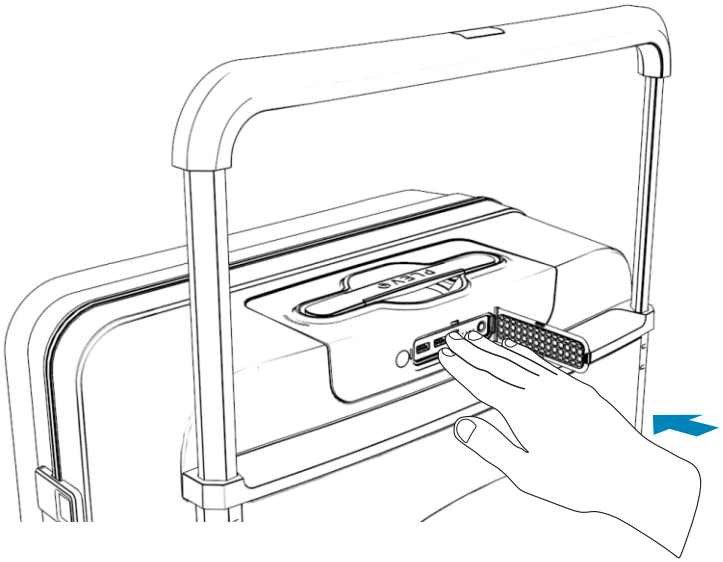

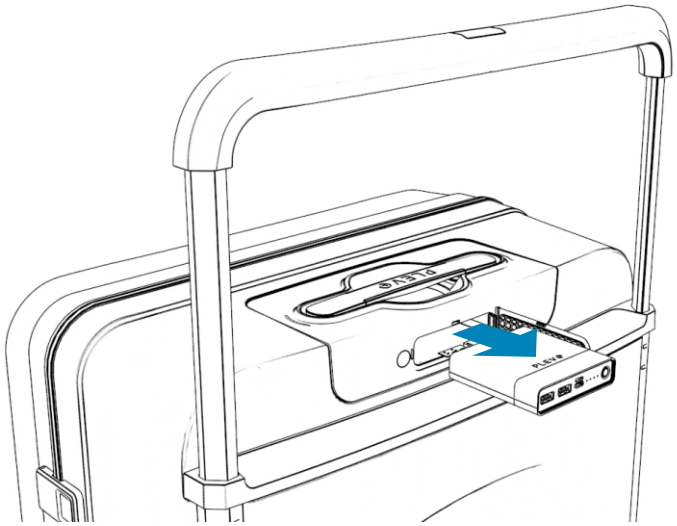

1 Open the sticky cover to the right to access the battery.

2 Press forward slightly until the ejection mechanism is released.

3 Remove the battery horizontally forward, without making any upward or lateral pressure.

REMOVABLE WHEELS

3

PLEVO®

Installation

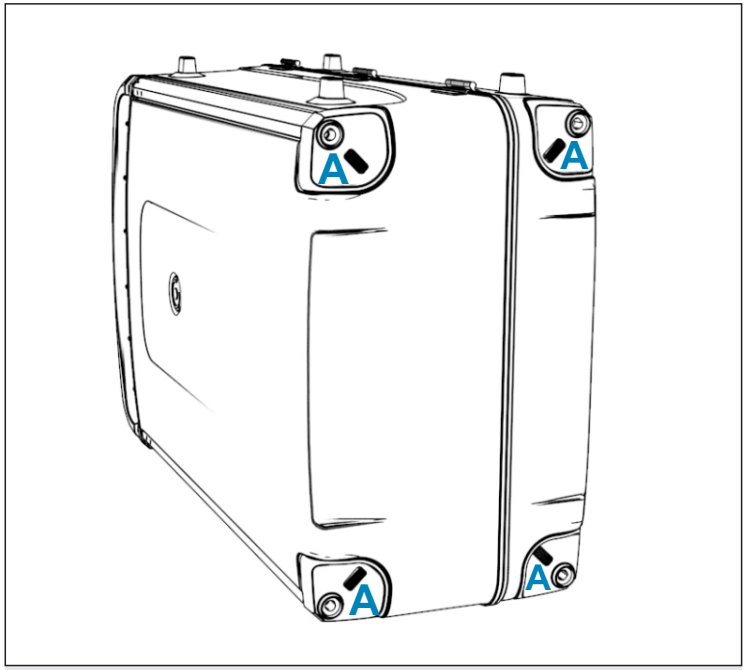

To be able to set each of the wheels it is necessary to get access to the four **"A"** locks placed in the lower part of the suitcase. Follow steps 1-3 to remove the latch and install the wheels.

1

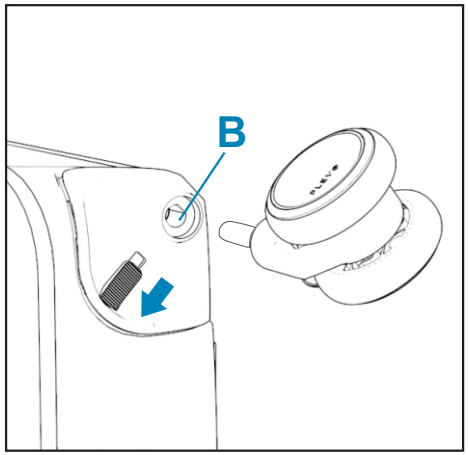

Hold the latch button down and place the wheel bolt into orifice B.

2

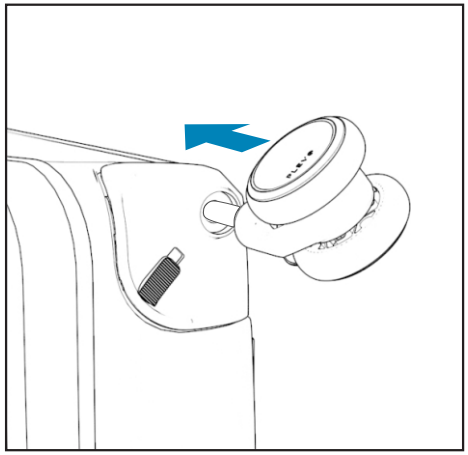

Make pressure on the wheel until it fully snaps into the orifice.

3

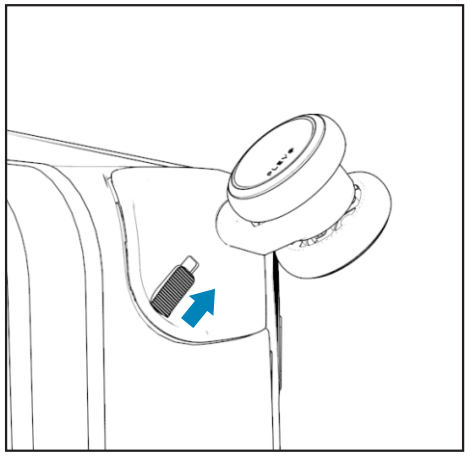

Release the safety button so that the final adjustment is done.

Disassembly

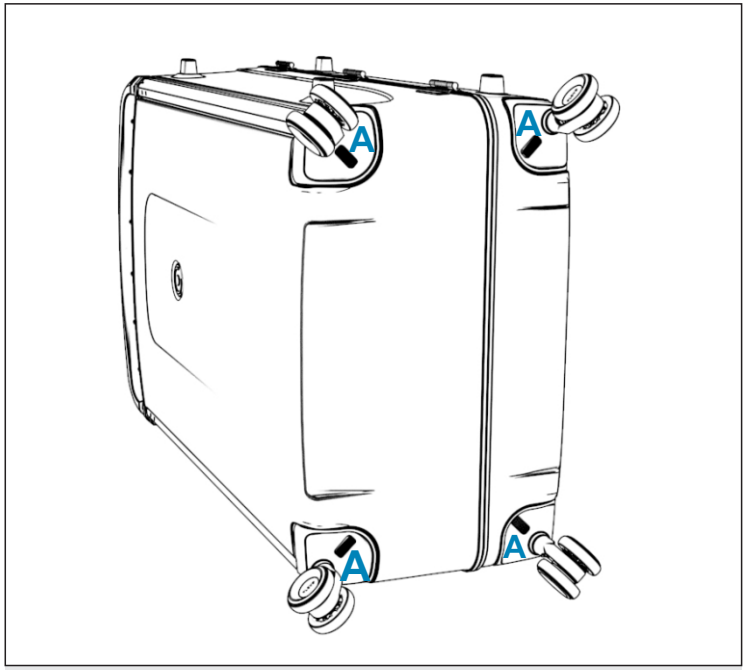

To remove each one of the wheels, it is necessary to access the four **"A"** locks located in the lower part of the bag. Follow steps 1-3 to remove the safe and extract the wheels.

1

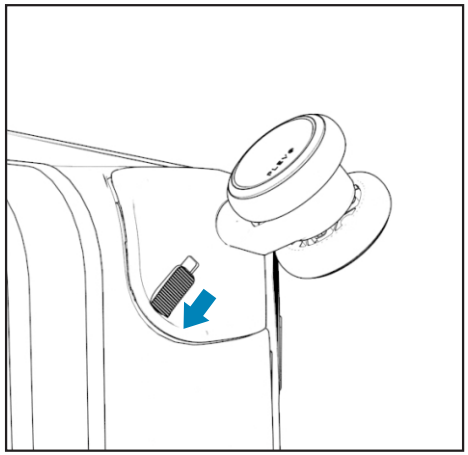

Hold the button back to release the latch.

2

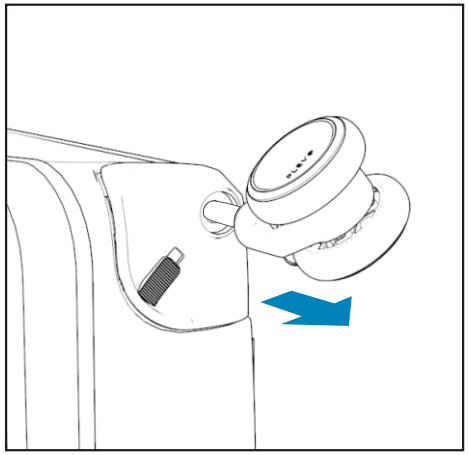

Pull the wheel backwards while holding down the button.

3

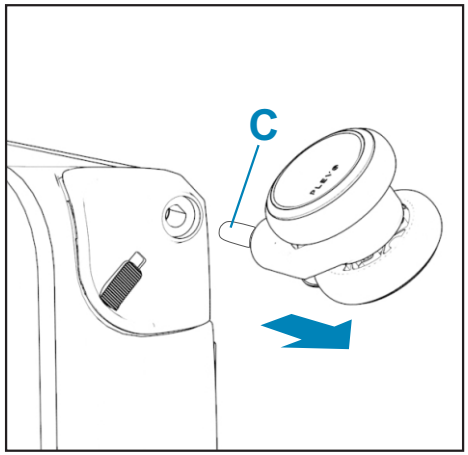

The wheel is released once the **"C"** Bolt is completely out from the orifice.

4

MOBILE APPLICATION AND ELECTRONIC LOCK

PLEVO®

COMPONENTS - Electronic lock

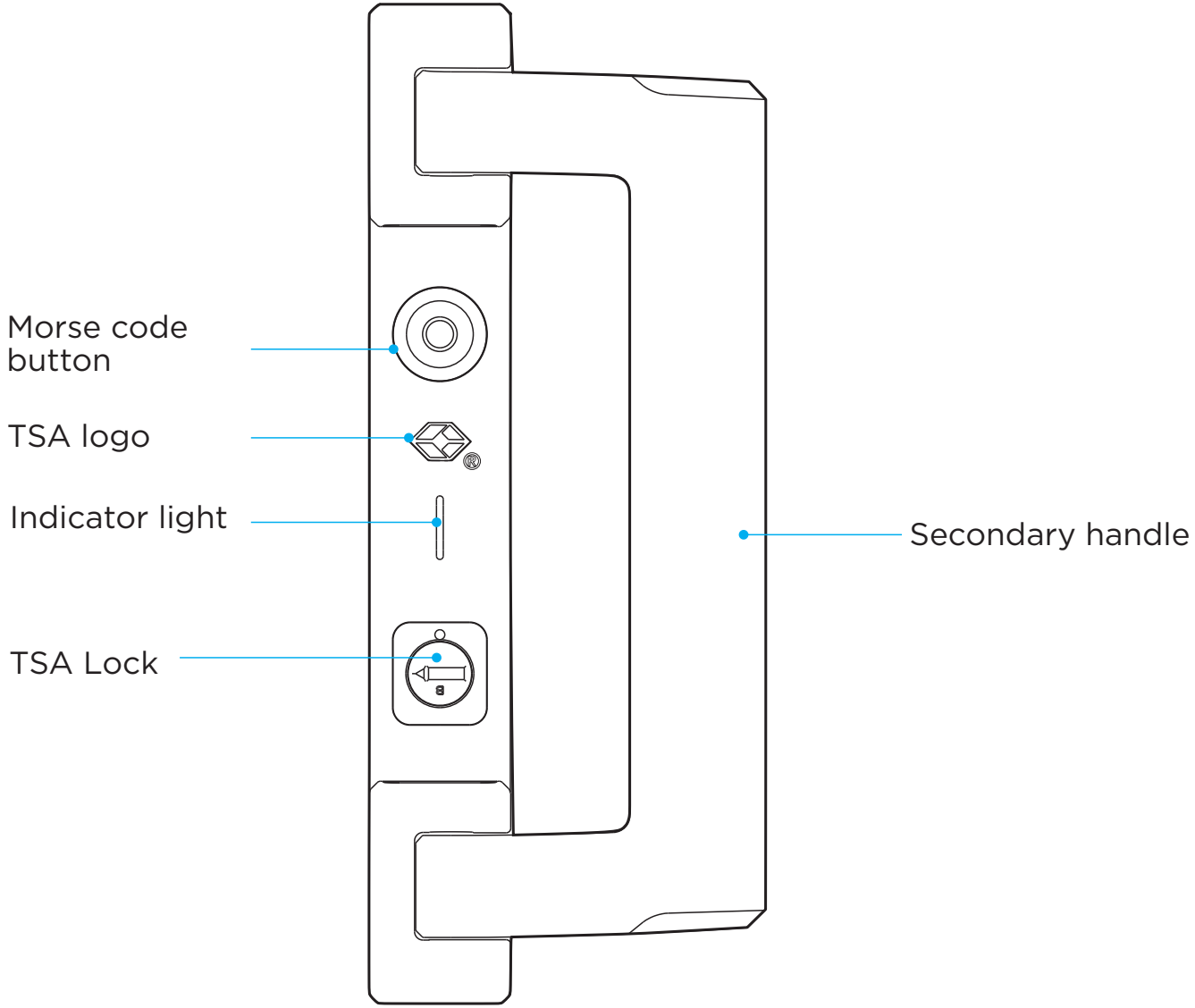

TRAVEL SENTRY®
lock. protect. relax.

Using Travel Sentry Approved lock allows your luggage to be unlocked and inspected by security authorities without damage.

Electronic lock (Morse code)

All PLEVO bags have an alternate Morse code closure system that replaces the old padlocks. Only one-time code configuration is required, and it will be ready for use at any time without depending on the battery or mobile phone.

1 Configure the code from our mobile application. You must select 4 digits. Allowed numbers: 1 to 5. For example: 1234.

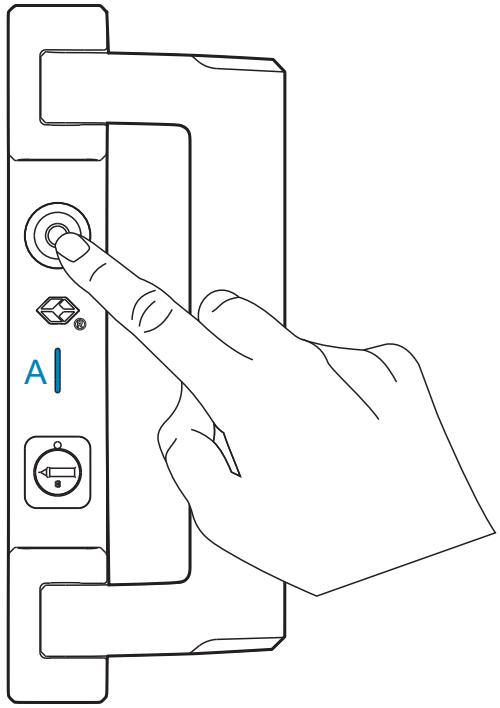

2 To open the bag, it is necessary to press the digit button. Doing so will turn the light (A) red on and the action will be taken as a number. So, if you press once, it will be 1, if you press three consecutive times, it is 3.

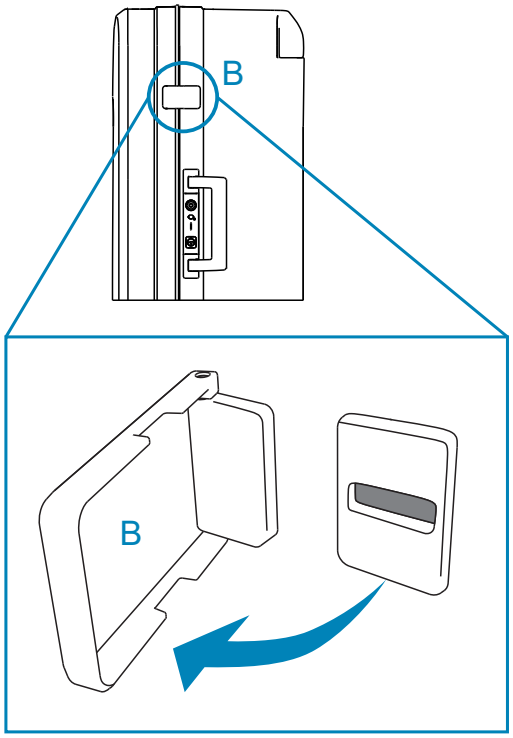

3 If the Morse code has entered correctly, the flaps "B", located up and down the closing, will open automatically releasing the latch.

Electronic lock (Face ID/Touch ID)

It is possible to open or close the bag by means of biometrics by using our mobile application. Depending on the smartphone model used you can choose to use facial recognition or fingerprint. In order to perform this action, it is necessary to follow the steps **1-3**

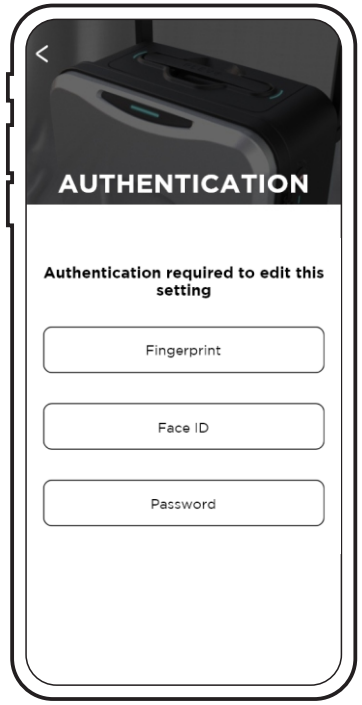

1 It is necessary to activate the opening method within the application depending on the device used. (In some cases, the selection is automatic)

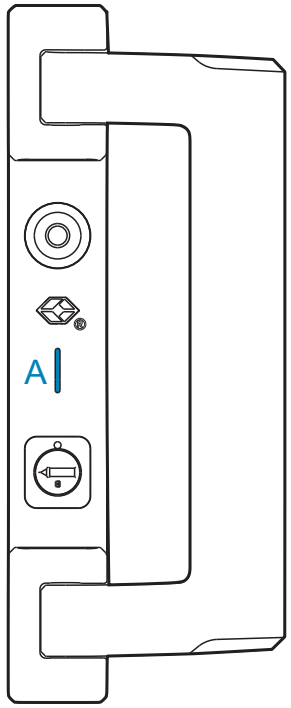

2 If the input by face ID or by Touch ID has been correct the **"A"** light will light in CYAN color for 3 seconds, otherwise it will be in red color communicating the error.

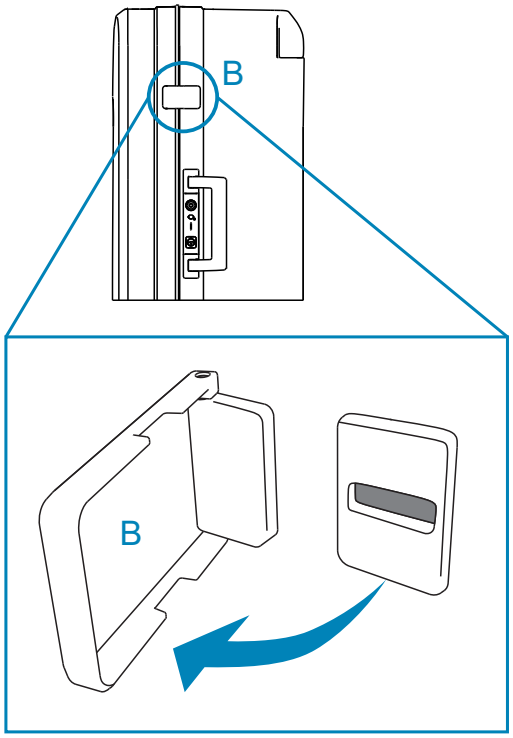

3 Immediately turn on the CYAN light the flaps "B", located up and down the closing, will open automatically releasing the latch.

Digital scale

1

2

Lift the suitcase from the floor using the **"A"** handle to activate the sensors

While holding luggage with handle **A**, you will be able to view the weight of the baggage using our mobile device application.

Important: Before weighing the bag, it is necessary to start a calibration from the Application. This lasts a few seconds -click on "START TO CALIBRATE"-. The system will then be ready, and the exact weight of the load will be displayed.

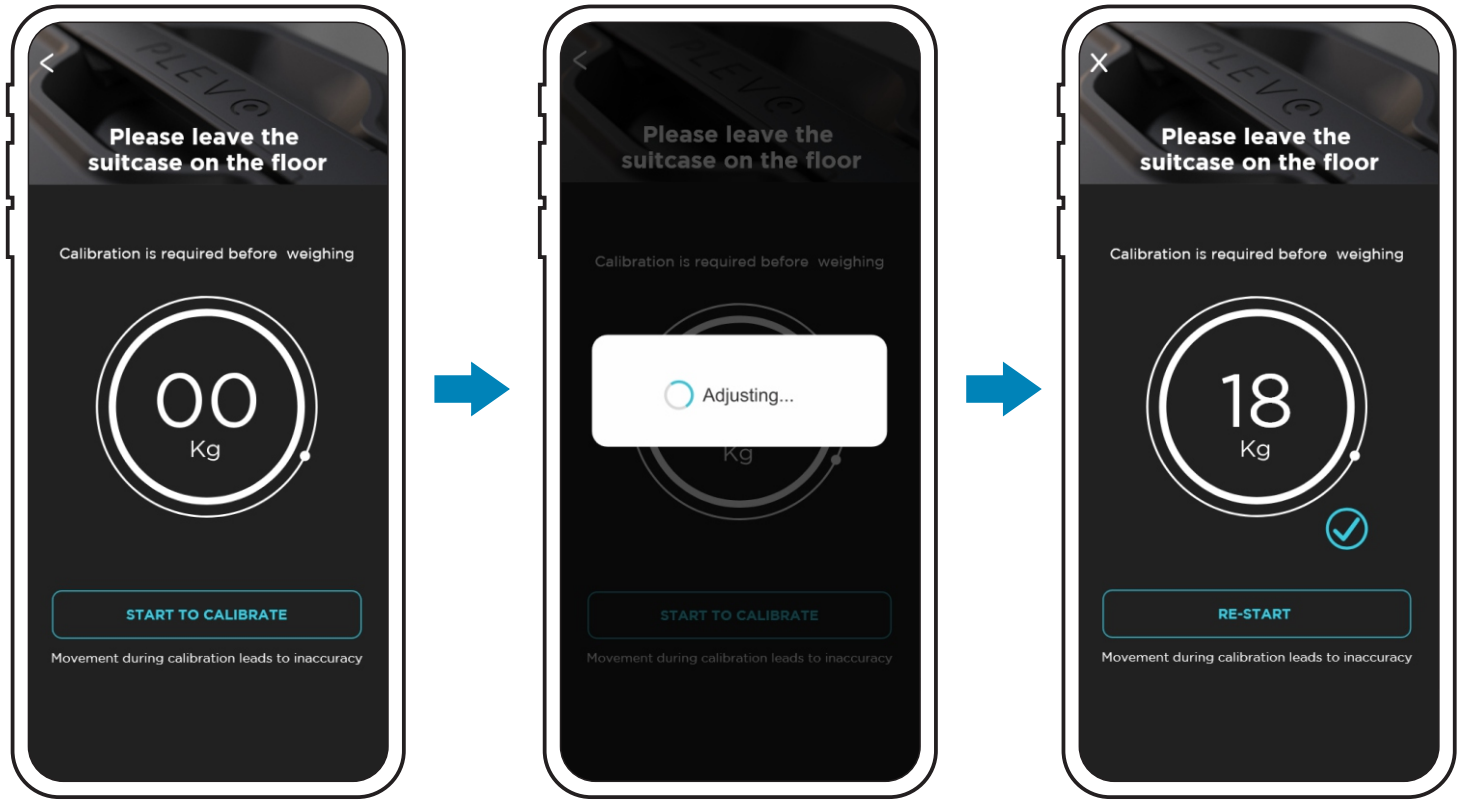

You will be able to monitor the weight of your baggage on your mobile device through our application.

GPS

Available on the App Store

ANDROID APP ON Google Play

The PLEVO UP model features a GPS tracking system that will allow you to locate the bag anywhere by using our mobile device application. In order to use this feature, you need to install the APP on your device, register and link the system with your luggage PLEVO.

Select the GPS function icon in the lower bar of our app and slide it to activate the system.

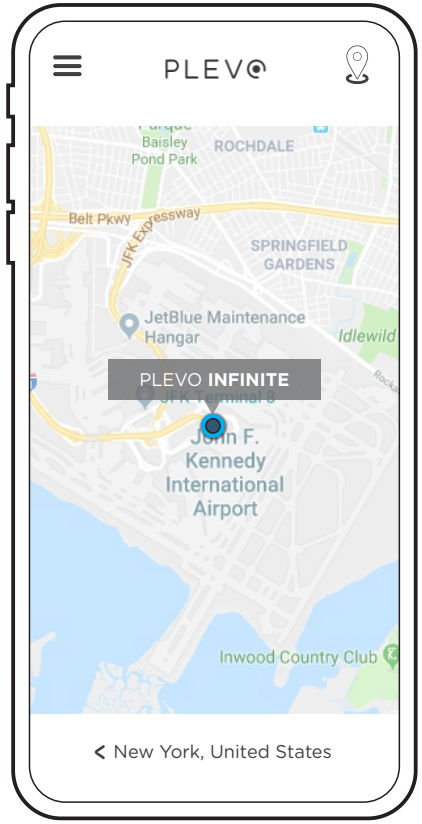

Our system will load the map of the site where your baggage is located, showing you the exact location.

The application for PLEVO devices has automatic distance alerts to warn you immediately when baggage is removed from the owner.

5

AIRPLANE MODE

PLEVO®

How to activate/deactivate airplane mode

AIRPLANE MODE

Our PLEVO bags are developed using a system of sensors that allow to detect what is happening and adjust the condition of the baggage according to the norms established by the FAA, IATA, DOT & EASA.

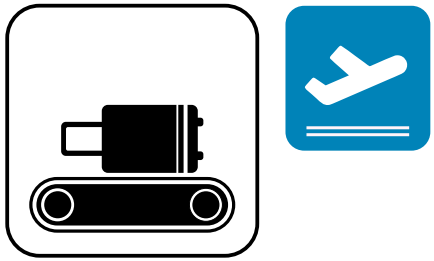

At the moment the suitcase is placed in horizontal mode the sensors that work with the GPS detect the location and go into airplane mode to completely disable, automatically, all the suitcase functions.

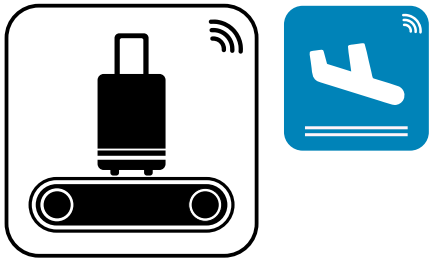

When landing, these sensors contact the GPS and in case of being at the airport, they automatically disable the airplane mode to re-connect all the functions of the bag. In this way a safe product is achieved that respects all the regulations in force.

You can monitor the activation and deactivation of your baggage on your mobile device through our application.

6

COMMUNICATION

PLEVO®

Indicator lights and alerts (electronic lock)

Electronic lock

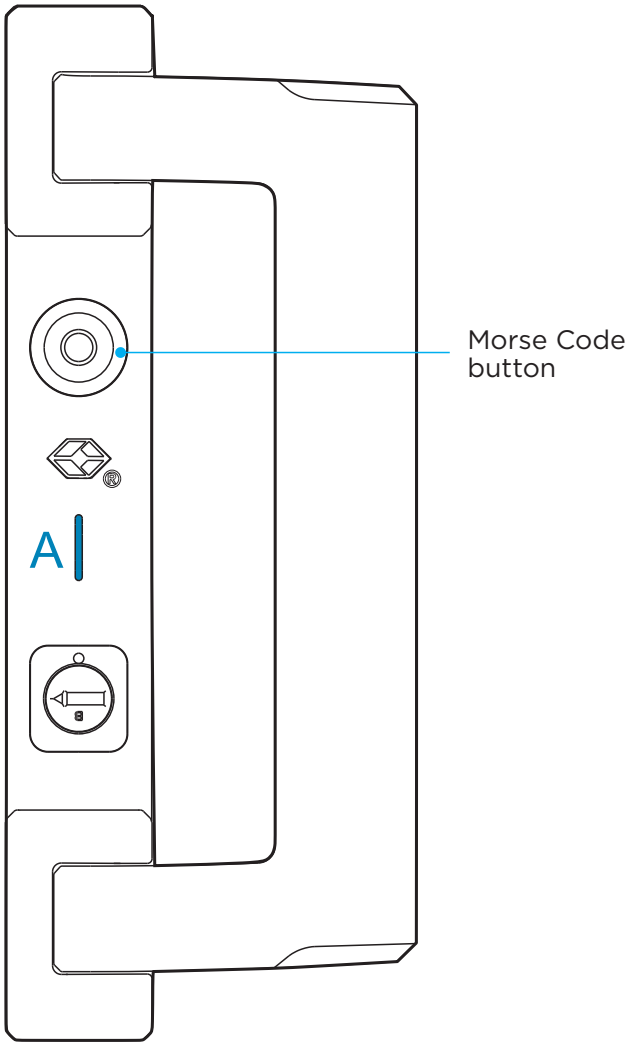

*Our electronic locks have a light **(A)** that show the different states of the bag.*

Can be presented at: CYAN RED

FUNCTIONS

Flashing red light each time the Morse code button is pressed.

Three flashes when Morse code is incorrectly entered or when an error occurs in the Face ID/Touch ID

A slow flash in CYAN color that will remain 3 seconds when the bag is opened or closed correctly by Face ID/Touch ID or Morse code.

Indicator lights and alerts (dashboard)

The suitcase has a luminous indicator board **(B)** that communicates the different states of the bag.

Can be shown as: CYAN RED

Red light flashes each time the Morse code button is pressed.

Three flashes when Morse code is incorrectly entered or when opening by Face ID/Touch ID fails

A slow flash in CYAN color that will remain 3 seconds when the bag is opened or closed correctly by Face ID/Touch ID or Morse code.

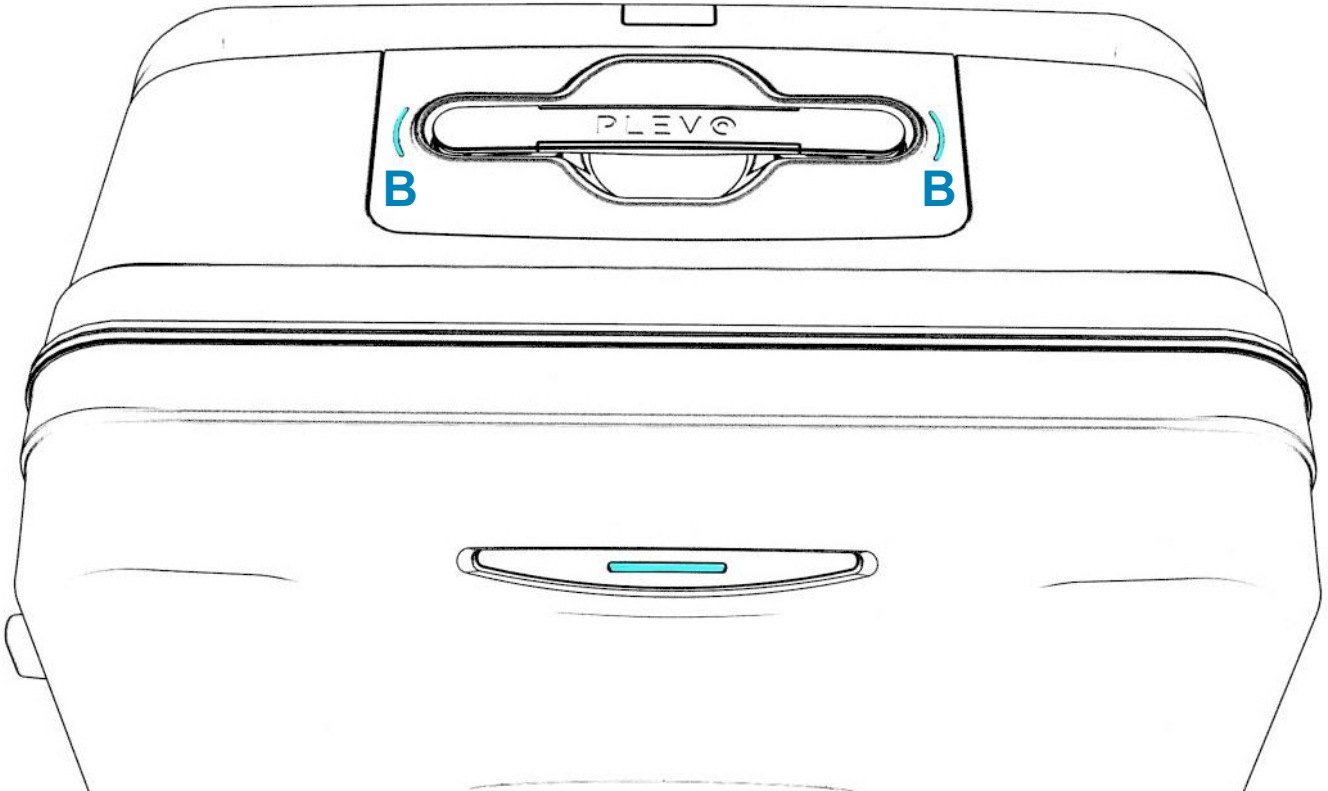

Indicator lights and alerts (frontal panel)

The bag has a front light **(C)** that communicates the closing condition of the bag and the pairing with devices.

Can be shown as: CYAN ROJO

A slow flash in CYAN color that will remain 3 seconds when the bag is opened or closed correctly by Face ID/Touch ID or Morse code.

Intermittent flashes in Red and cyan when the bag is finding a device to connect.

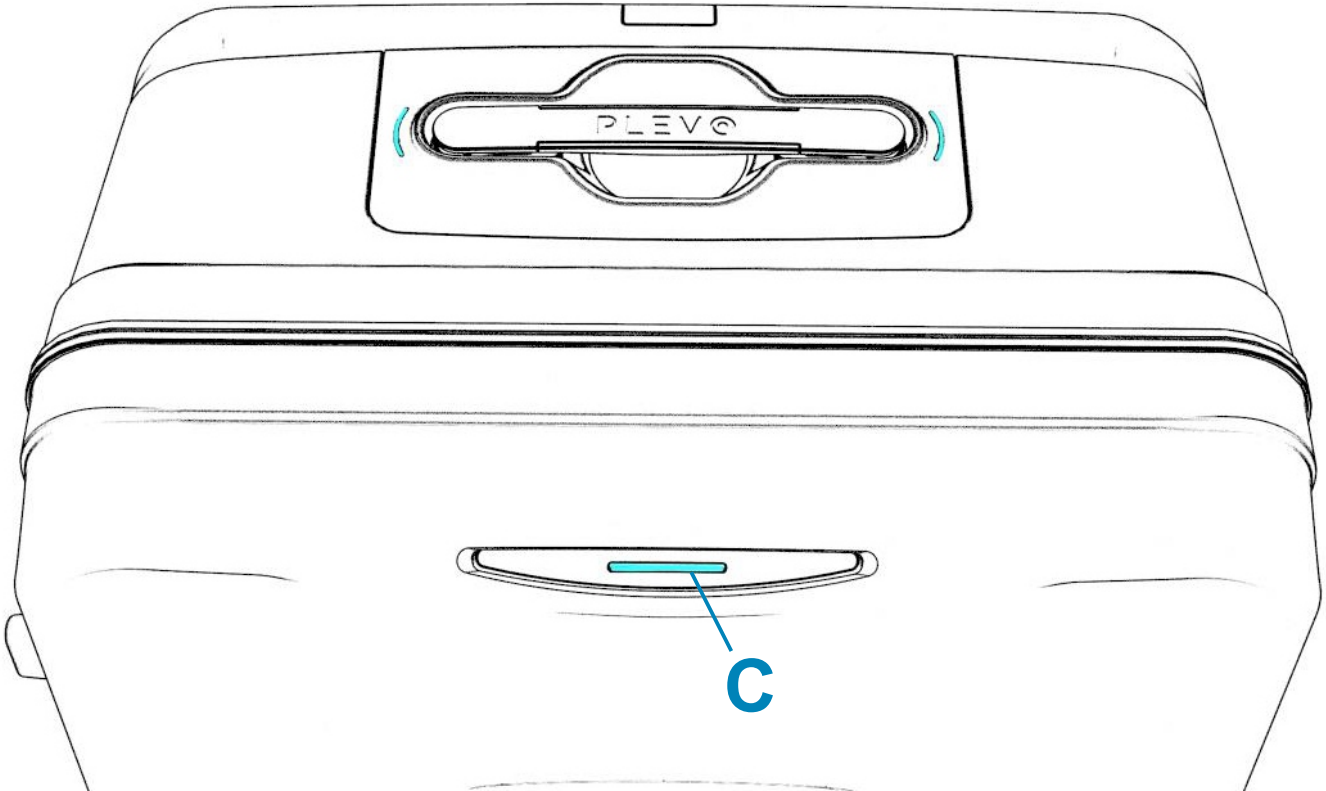

GARMENT BAG SYSTEM

PLEVO®

Components

The system, the universal hangers and the suit-rack are included only in our model

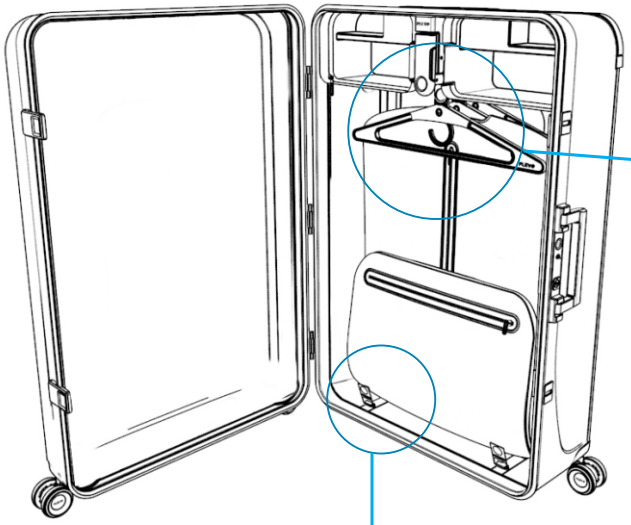

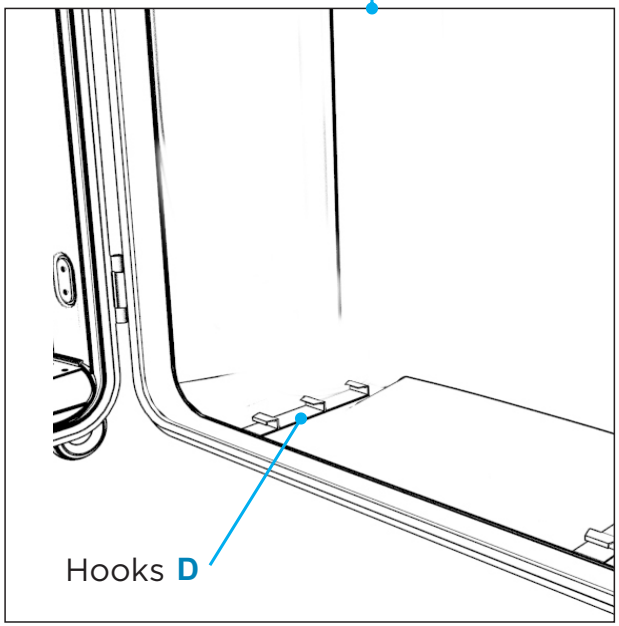

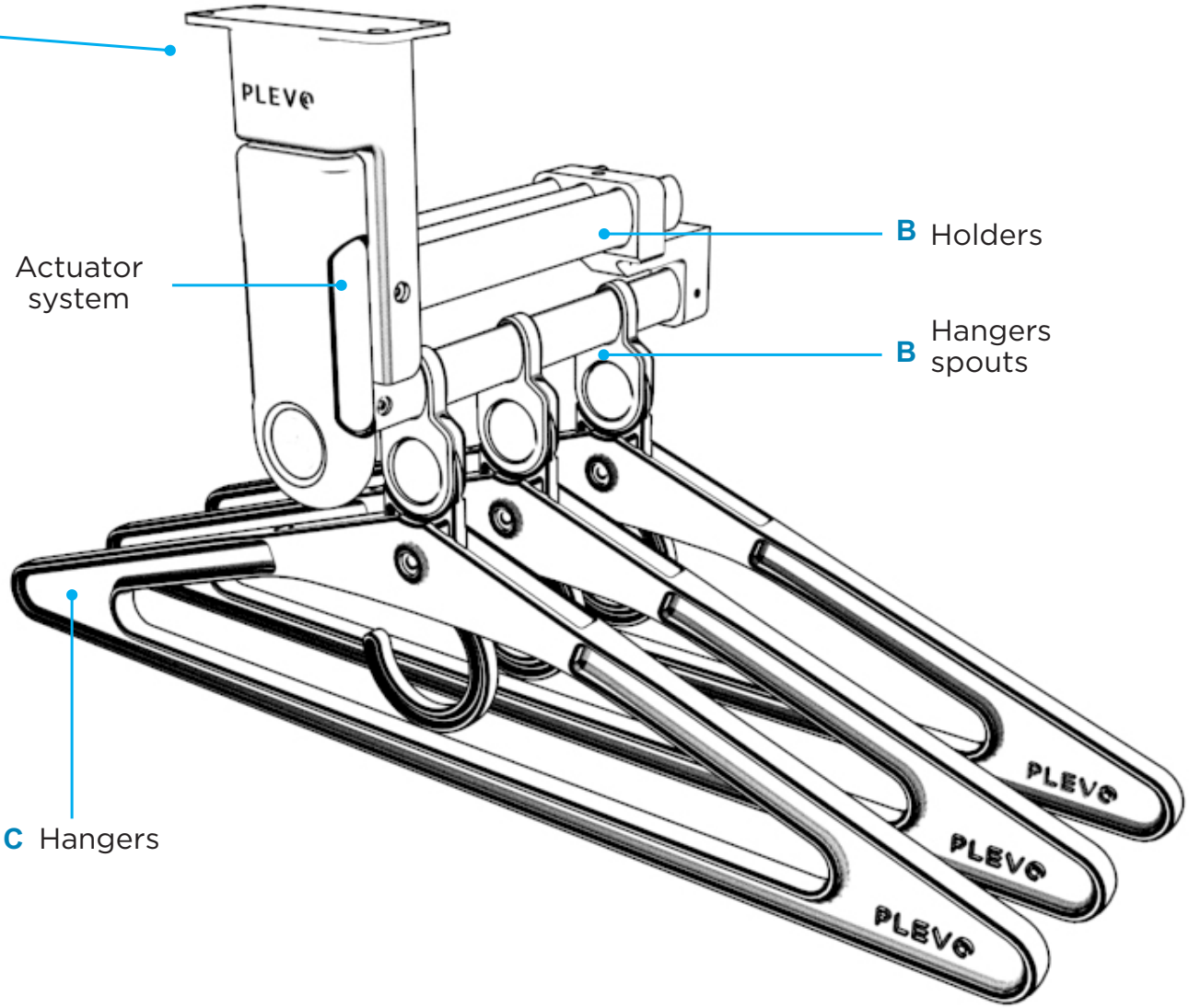

Operation

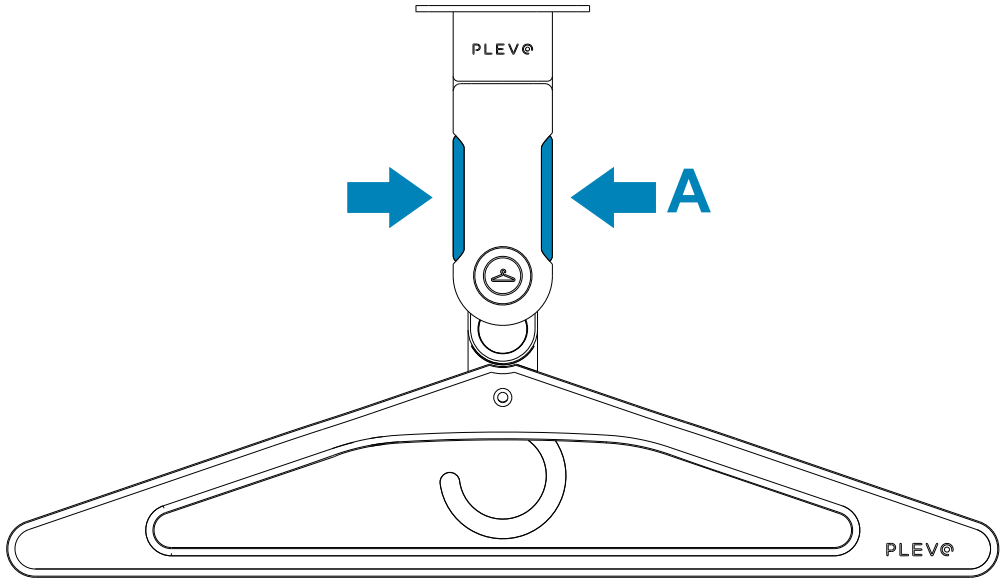

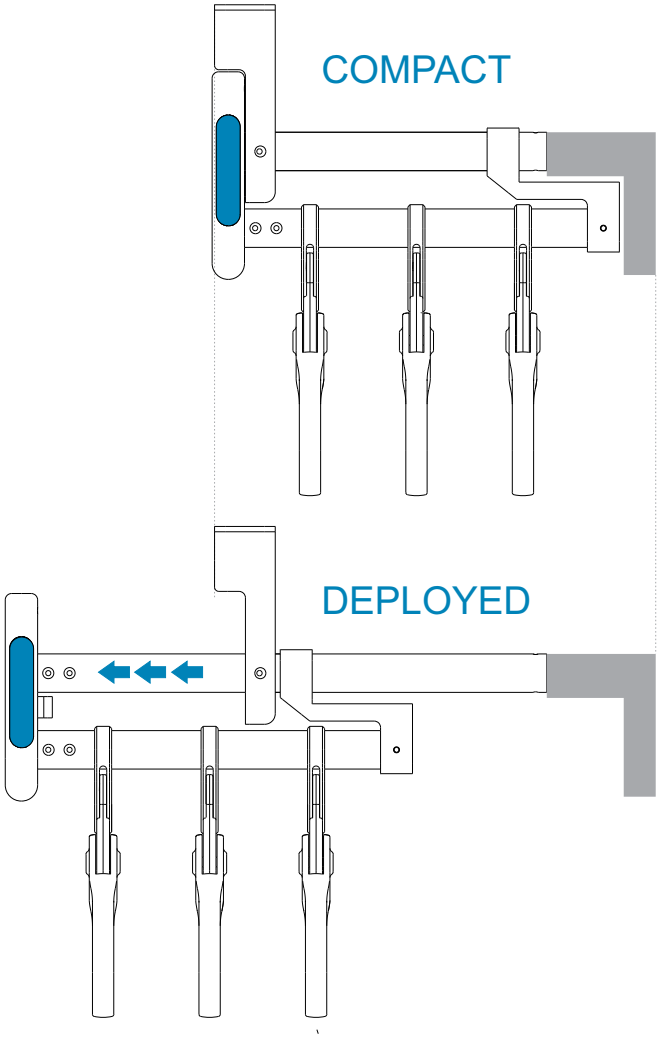

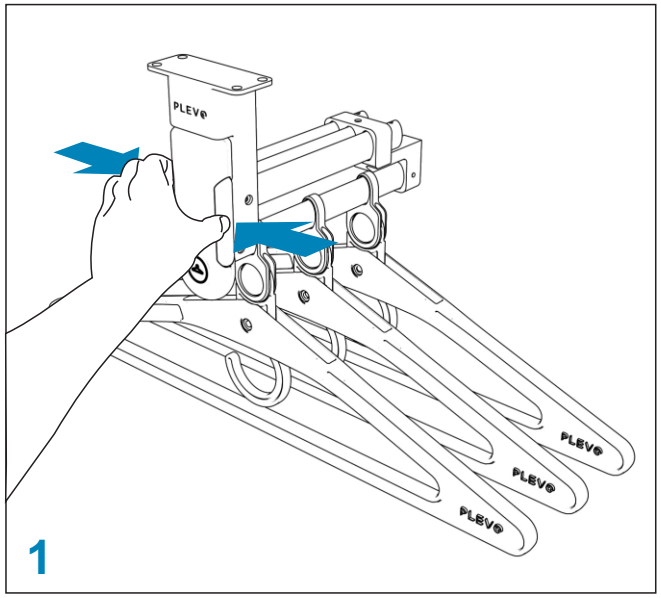

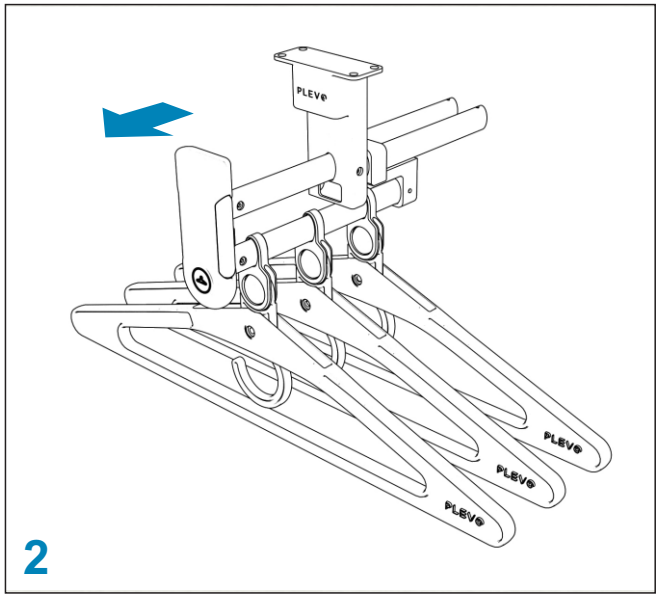

To Deploy the system and access the hangers, press the command buttons inward releasing the latch (Figure 1).

Then it will be necessary to slide back the command to finish deploying the system (Figure 2).

Operation
-Hangers-

UNIVERSAL HANGERS
Our system has a set of plastic hangers adaptable to different supports. In this way it can be used in both a PLEVO and a standard furniture when the garment is moved.

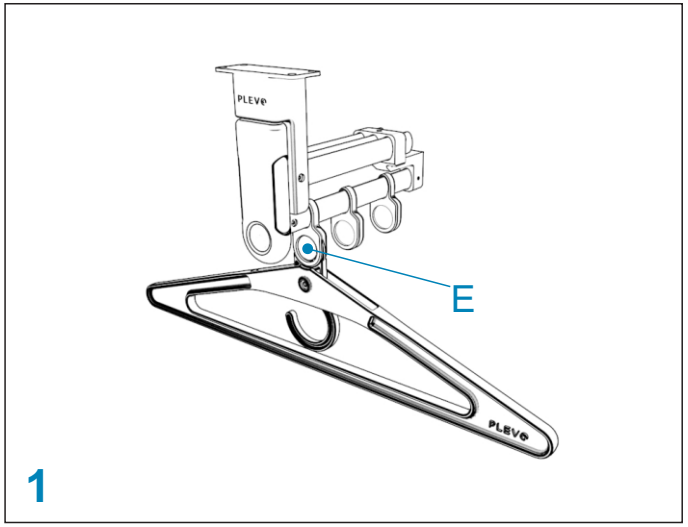

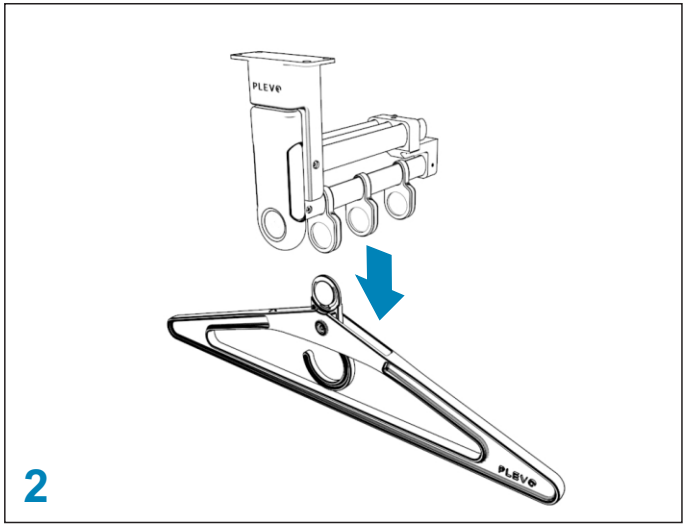

1-2
To remove a hanger it is necessary to press the **E** button **(Figure 1)** and then slide it downwards to make the workpiece unadjusted.

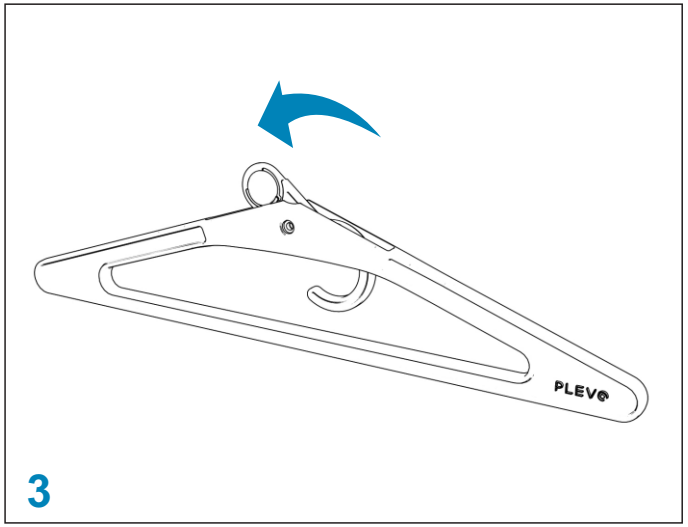

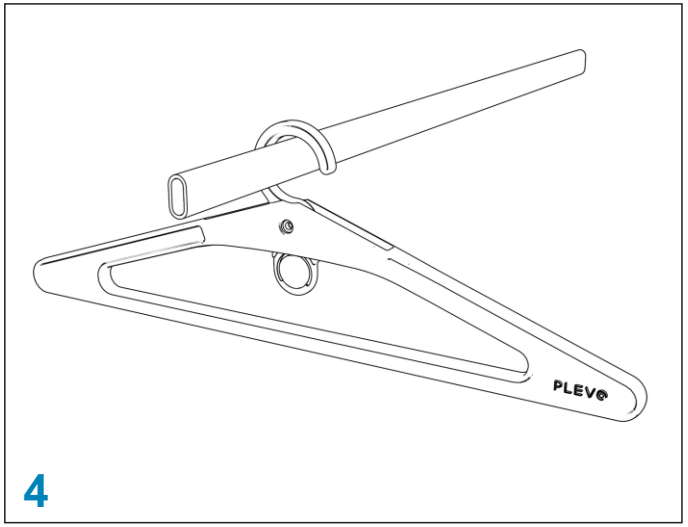

3-4
Rotate part **F (Figure 3)** to release the hook that allows the hanger to be held in different types of supports **(Figure 4).**

Operation

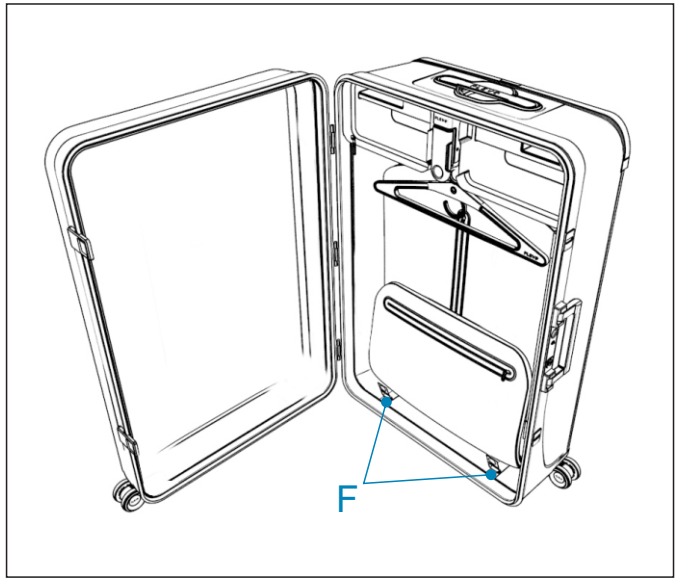

In the lower part of the inside of the UP model there are two metal strips of hooks necessary for the anchorage of the trunks.

To make the adjustment it is necessary to extend the plastic part **G (Figure 1)** to the corresponding hook and to anchor it to improve the fastening of the suit holder **(figures 2 and 3)**

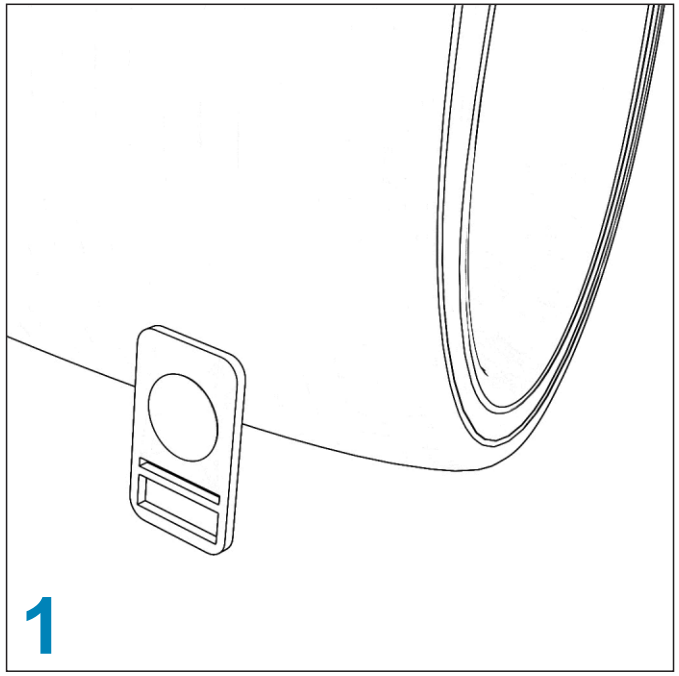

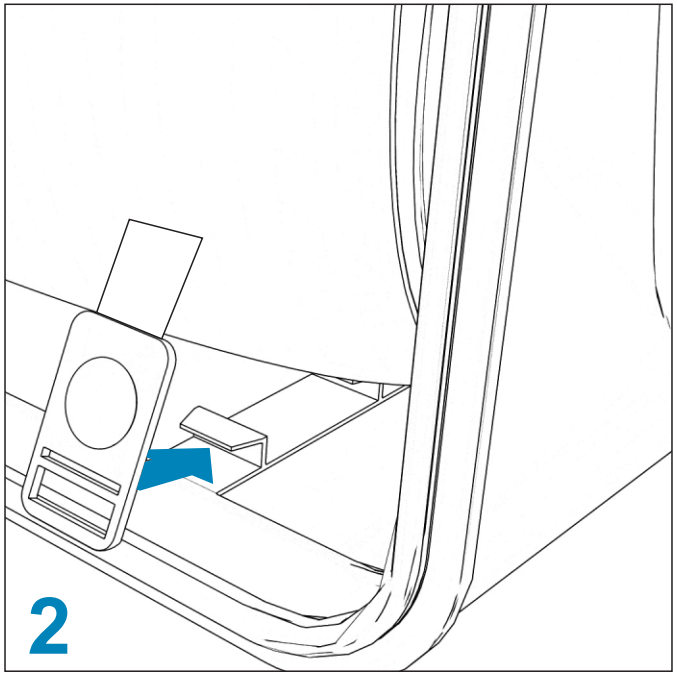

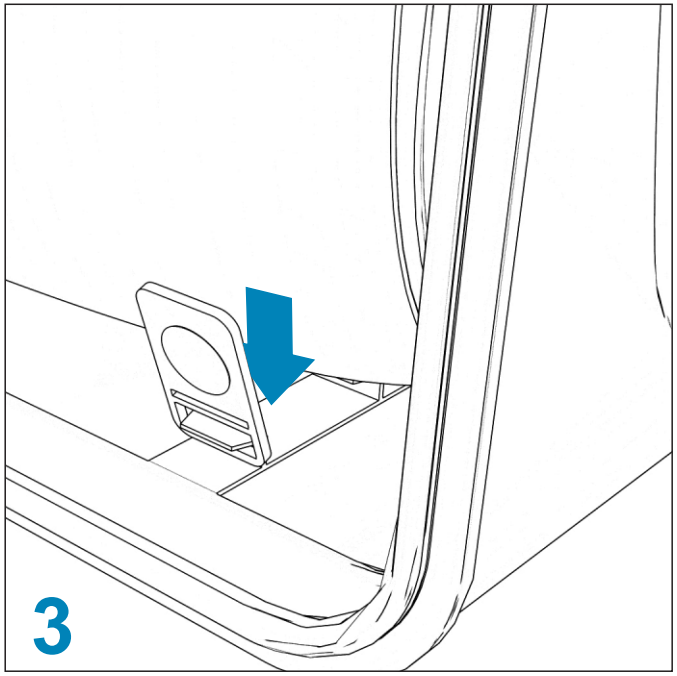

www.plevo.co

FCC STATEMENT :

This device complies with Part 15 of the FCC Rules. Operation is subject to the following two conditions:
(1) This device may not cause harmful interference, and
(2) This device must accept any interference received, including interference that may cause undesired operation.
Warning: Changes or modifications not expressly approved by the party responsible for compliance could void the user's authority to operate the equipment.

NOTE: This equipment has been tested and found to comply with the limits for a Class B digital device, pursuant to Part 15 of the FCC Rules. These limits are designed to provide reasonable protection against harmful interference in a residential installation. This equipment generates uses and can radiate radio frequency energy and, if not installed and used in accordance with the instructions, may cause harmful interference to radio communications. However, there is no guarantee that interference will not occur in a particular installation. If this equipment does cause harmful interference to radio or television reception, which can be determined by turning the equipment off and on, the user is encouraged to try to correct the interference by one or more of the following measures:

Reorient or relocate the receiving antenna.

Increase the separation between the equipment and receiver.

Connect the equipment into an outlet on a circuit different from that to which the receiver is connected.

Consult the dealer or an experienced radio/TV technician for help.

FCC Radiation Exposure Statement:

This equipment complies with FCC radiation exposure limits set forth for an uncontrolled environment. This equipment should be installed and operated with minimum distance 20cm between the radiator & your body.