blu™ 3-Pack POS Unit

SETUP GUIDE

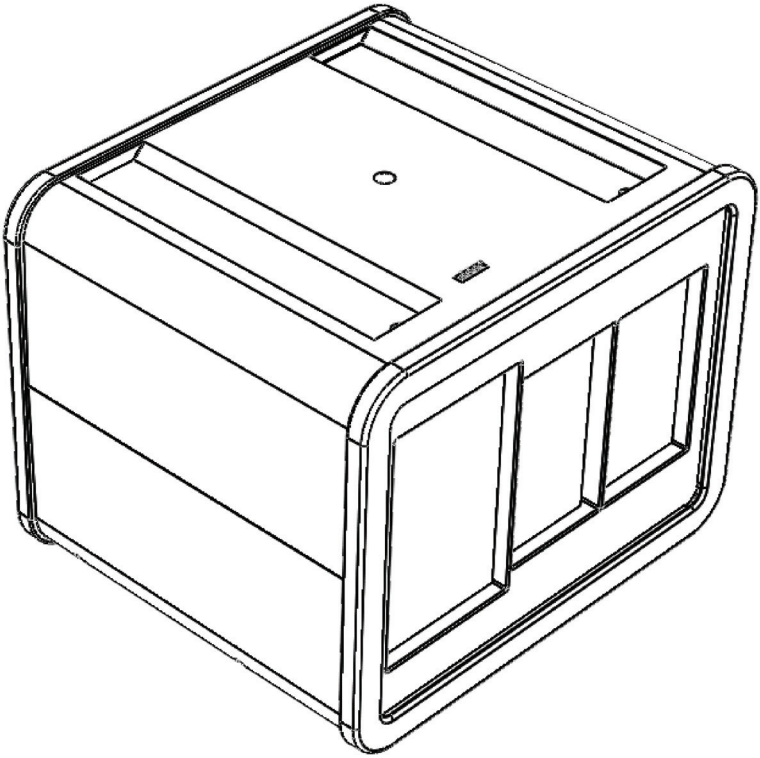

blu®

General Safety Information..... 4

Care and Maintenance..... 5

Certification..... 5

What's Included 6

Components Overview..... 7

blu™ 3-Pack POS Setup Guide 8
Installing Display Packs **8**
Installing Pack Tray **10**
Removing Dry Starter Kit Insert **11**
Filling and Dispensing from Trays **12**
Inserting POS Advertising **13**
Stacking Units **14**
Applying Pin Covers **15**

Troubleshooting..... 17
Damaged Goods **17**
Electronic Component Failure **17**

blu™ Appendix 18

GENERAL SAFETY INFORMATION

FOR THE SAFE AND SUCCESSFUL OPERATION OF THIS PRODUCT, PLEASE READ AND FOLLOW THE INFORMATION CONTAINED IN THIS USER MANUAL BEFORE USE.

- Do not try to access internal components of any blu™ units as contents may cause electric shock.

- For proper operation, use only approved blu™ branded electronics and components as well as specified compatible electronic devices.

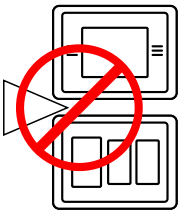

- Do not place any items between stacked units at any time. Disruption of power to the units can cause damage to the unit.

- **No metal is to come into contact with power connection points of blu™ units. These points are located on the tops of each blu™ unit, and connect to transfer power when stacked. Metallic interference will cause damage to the unit and possible harm to the individual.**

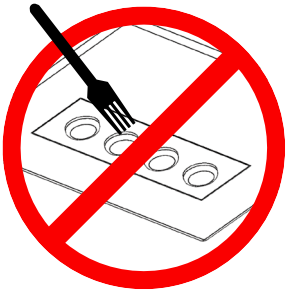

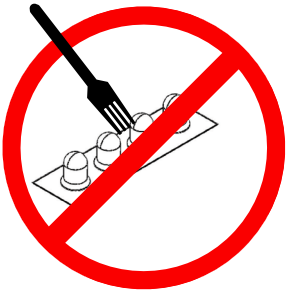

CARE AND MAINTENANCE

- Keep blu™ units and all accessories out of reach of children.
- Do not use third party power supplies or non-approved adapters with blu™ units.
- Do not attempt to open the outer casing of the product.
- Do not clean any blu™ units with harsh chemicals and keep blu™ units away from liquids.
- Do no expose blu™ units to extreme temperatures.
- Do not paint or apply coatings to blu™ units, as you might affect parts or damage internal components.
- Do not keep blu™ units in direct sunlight

CERTIFICATION

blu™ units are all FCC, SGS (NRTL) and ROHS certified for safety and reliability under the United States compliance standards.

Unauthorized changes or modifications to this device may impair the user's ability to operate this device and will void the warranty.

FCC, SGS (NRTL) and ROHS Notice to Users

Users are not permitted to make changes or modify this device or any of its companion products or components in any way. Changes or modifications are considered a safety hazard/risk and will void the warranty.

WHAT'S INCLUDED

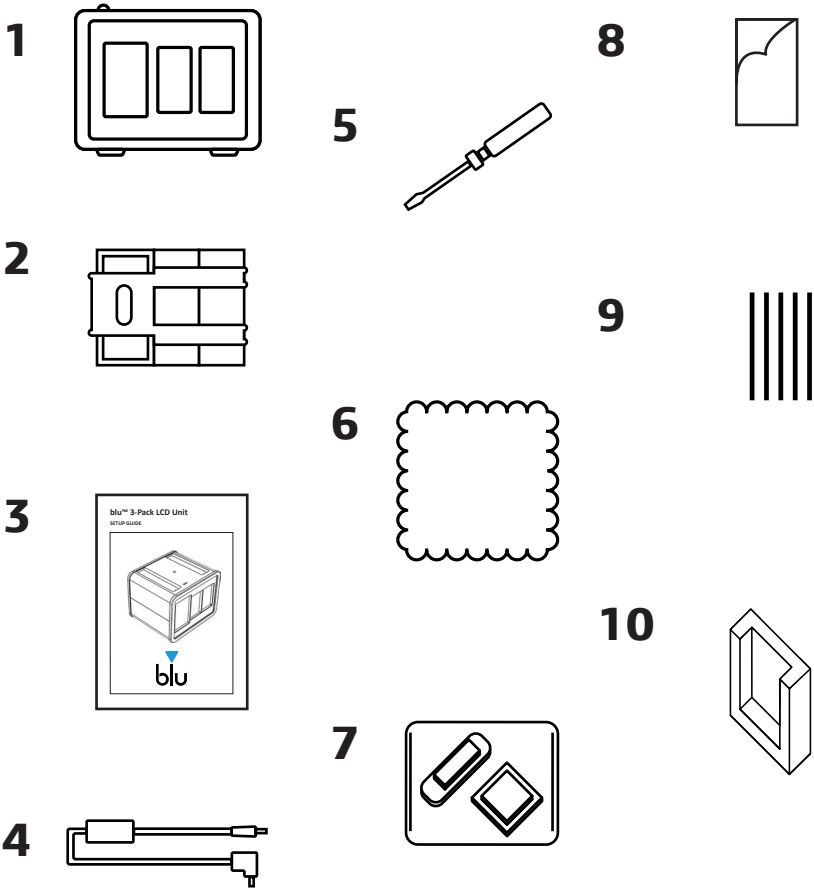

1.	blu™ Product Unit	**6.**	1 x Microfiber Cloth
2.	blu™ Product Tray (with Starter Kit insert)	**7.**	Polybag of 2 x Pin Caps
3.	Setup Guide	**8.**	Double-Sided Tape for Transformer
4.	60 Watt Power Supply	**9.**	5 x Cable Ties
5.	Screwdriver	**10.**	1 x EVA Foam Insert

COMPONENTS OVERVIEW

FRONT VIEW

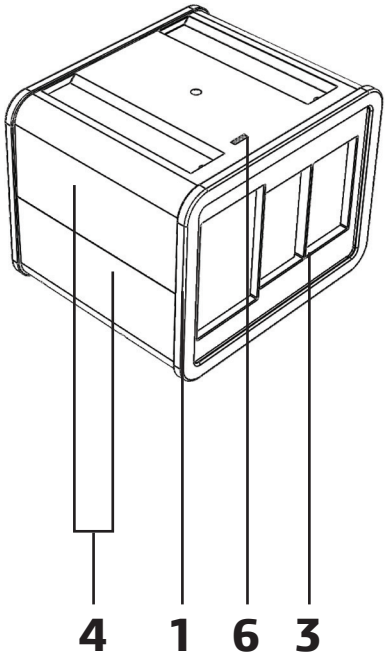

REAR VIEW

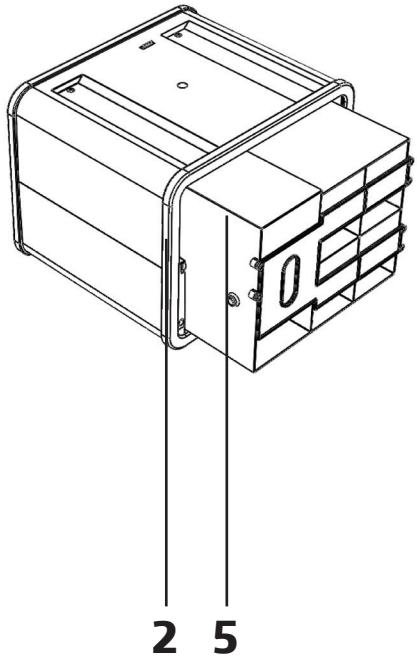

1. Blue Front Trim
2. Blue Rear Trim
3. Pack Display Fascia
4. Outer Casing
5. blu™ Product Tray
6. Power Connection Points

blu™ 3-Pack POS Unit Setup Guide

Installing Display Packs

- Remove unit from box and lay flat on the rear side with the display cavity facing upwards. Remove front blue trim as shown in the visual opposite.

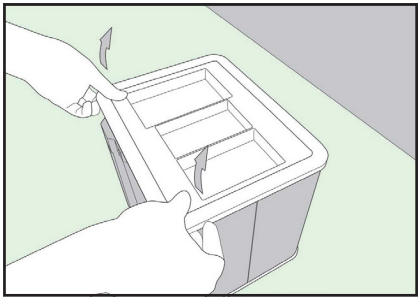

- Using the screwdriver provided, remove each screw from the front fascia by turning the screw anti-clockwise as shown in the visual opposite.
- Carefully remove clear front fascia.

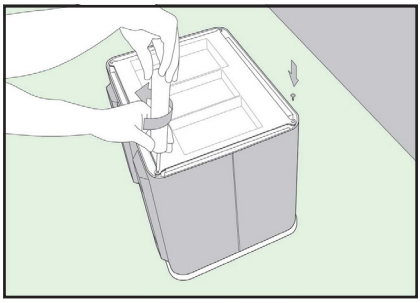

- Using the provided double-sided tape, peel one side and press firmly in the center of the rear face of the pack. Peel the remaining side of tape and press pack firmly into cavity as shown in the visual opposite. Note: The left (larger) cavity is for the my blu Device Kit and the remaining 2 x cavities are for the My blu Pod Packs.

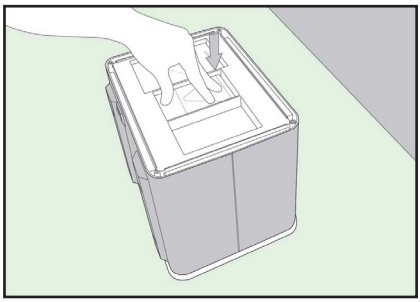

- Carefully peel clear film from outer face of clear panel.
- When all packs are placed, secure the clear front fascia as shown and secure by replacing screws (Clockwise) as per the visual shown opposite. Note: Do not over tighten screws. Tighten until firm but not OVER tight.

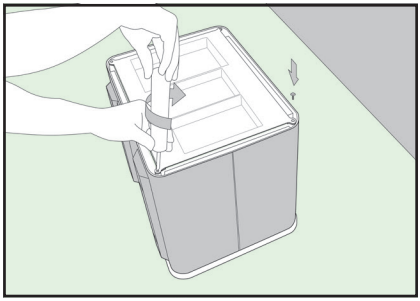

- Replace front blue trim as shown in the visual opposite.

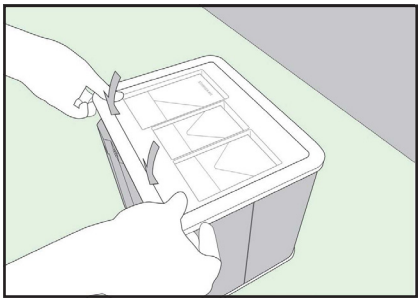

Installing Pack Tray

- Carefully remove the rear blue trim as shown in the visual opposite.

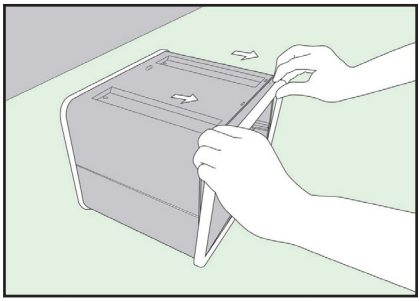

- Insert tray using the guide rails on either side of the unit as shown in the visual opposite.

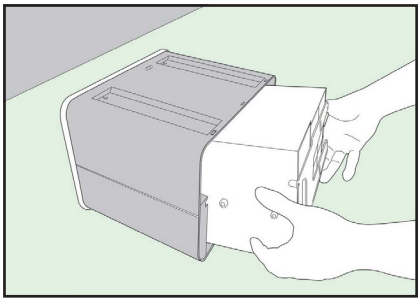

- Once the tray is in position, replace the blue trim to the outer edge as shown in the visual opposite.

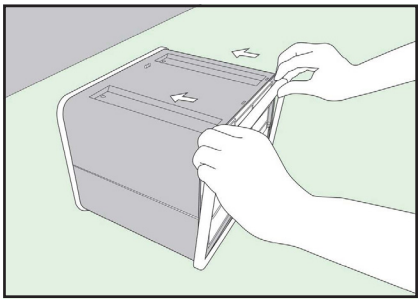

Removing Dry Starter Kit Insert

- Using the screwdriver provided, remove each screw from the clear fascia by turning the screw anti-clockwise as shown in the visual opposite.
- Carefully remove clear fascia.

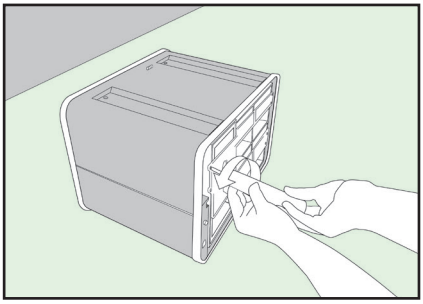

- Remove the Starter Kit insert.

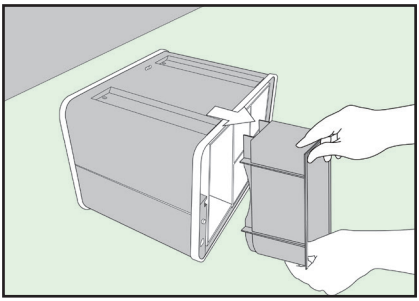

- Using the screwdriver provided, fix the fascia panel onto the tray using the screws as shown in the visual opposite.

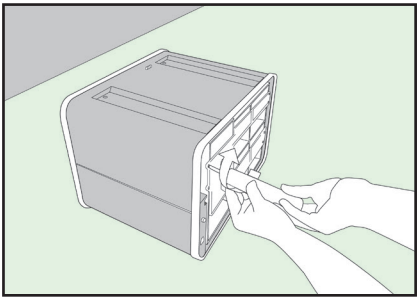

Filling and Dispensing from Trays

- Load packs by inserting into the top opening of each section as per the visual opposite.

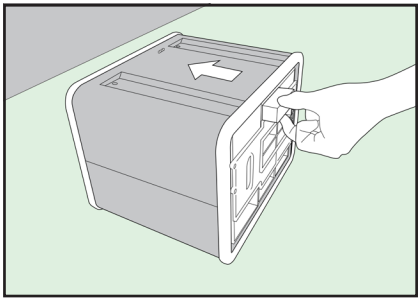

- Remove packs by pulling out from the bottom opening of each section as per the visual shown opposite.

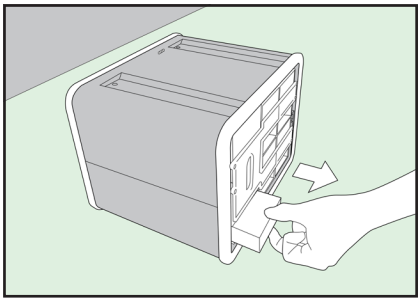

Inserting POS Advertising

- Remove blue trim as shown in the visual opposite.

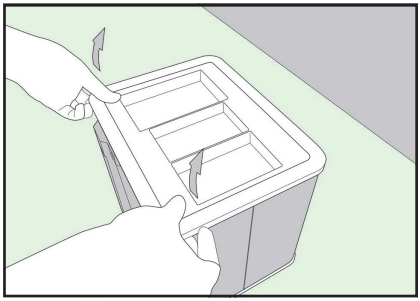

- Using the screwdriver provided, remove each screw from the front fascia by turning the screw anti-clockwise as shown in the visual opposite.
- Carefully remove clear front fascia.

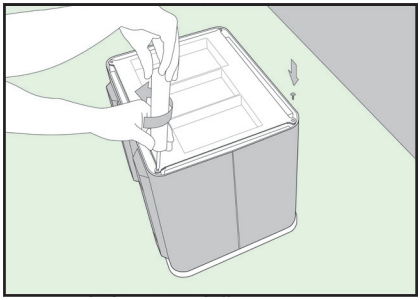

- Lay POS Advertising over the pack display fascia as shown in the visual opposite.

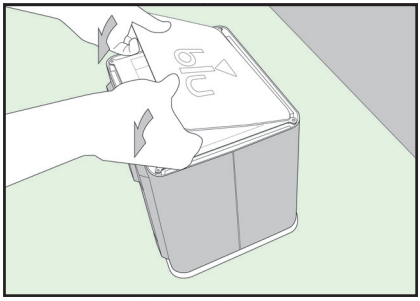

- Fix clear cover on unit using provided screws as shown in visual opposite.

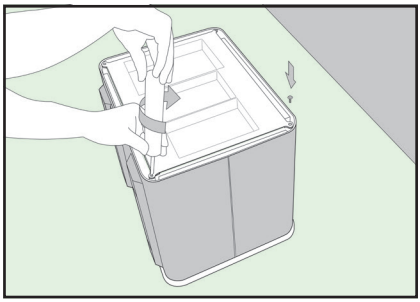

- Replace the blue trim as per the visual opposite.

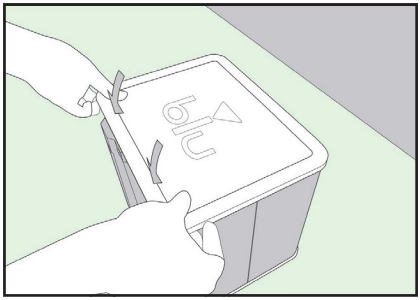

Stacking Units

- Units can be stacked on top of each other for multiple displays in a store (NOTE: Units should not be stacked more than 3 high).
- Only one unit needs to be connected to the power source.
- When stacked correctly on top of another unit, the top unit(s)

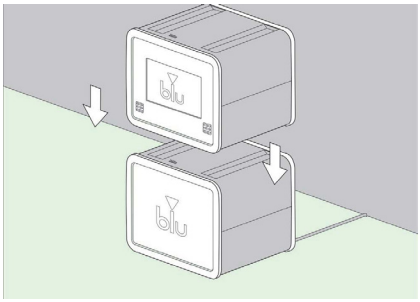

- Will connect automatically to the bottom units power.
- Stacked units should sit directly on top of the bottom unit, with the feet of the top unit 'nesting' into the top of the bottom unit as per the visual opposite.

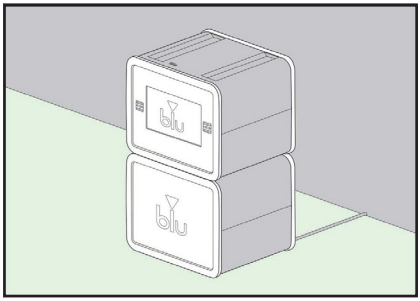

Applying Pin Covers

- Please ensure that any exposed power connection points are covered by the provided pin covers. **These pin covers are only to be used on the top exposed pins of the top unit (as shown in the visual opposite, and the bottom exposed pins of the bottom unit (as shown in the visual opposite).**

- **Note: The visual opposite refers to the bottom unit ONLY. Do not cover the bottom pins of the top or center unit as this will disrupt power between the units.**

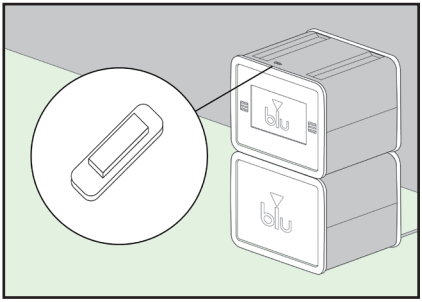

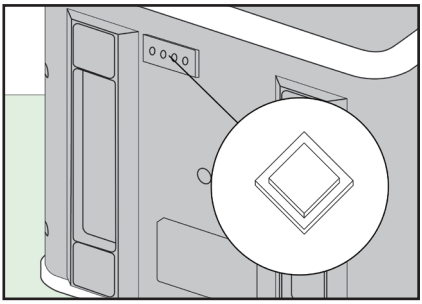

Please refer to next page

Top Unit Pin Cover Application

- Remove one side of the double sided tape and place on the inside of the pin cover.
- Once the tape is firmly pressed inside the pin cover, place a pin cover over the pins on the top of the unit as shown in the visual opposite.

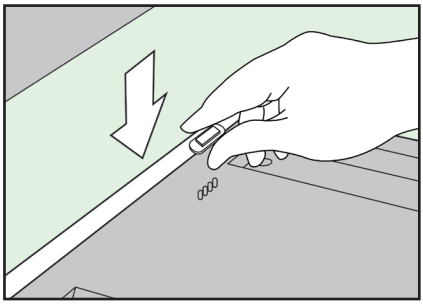

Bottom Unit Pin Cover Application

- Similarly, when tape is applied to the second pin cover, place the second pin cover over the pins on the bottom of the unit as shown in the visual opposite.

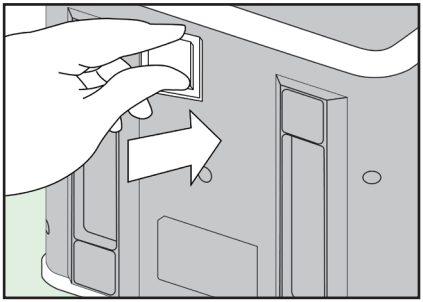

TROUBLESHOOTING

Damaged Goods

- If you receive any damaged/ broken components, please contact online support and complete the **Re-Order Process** form at **repsupport@blu.com**

Electronic Component Failure

- If there are issues involving any electronic components, please contact online support at **repsupport@blu.com**

blu™ Appendix

FCC Regulatory Compliance

Note: This equipment has been tested and found to comply with the limits for a Class B digital device, pursuant to Part 15 of the FCC Rules. These limits are designed to provide reasonable protection against harmful interference in a residential installation. This equipment generates, uses and can radiate radio frequency energy and, if not installed and used in accordance with the instructions, may cause harmful interference to radio communications. However, there is no guarantee that interference will not occur in a particular installation.
If this equipment does cause harmful interference to radio or television reception, which can be determined by turning the equipment off and on, the user is encouraged to try to correct the interference by one or more of the following measures:
-- Reorient or relocate the receiving antenna.
-- Increase the separation between the equipment and receiver.
-- Connect the equipment into an outlet on a circuit different from that to which the receiver is connected.
-- Consult the dealer or an experienced radio/TV technician for help.
Warning: changes or modifications not expressly approved by the party responsible for compliance could void the user's authority to operate the equipment.