SYLVANIA

Model No. : SP800

BLUETOOTH LED LIGHT UP FM RADIO TOWER SPEAKER

Instruction Manual

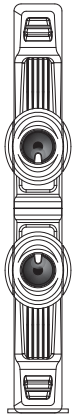

PLEASE READ THIS INSTRUCTION MANUAL CAREFULLY BEFORE USE AND KEEP IT FOR FUTURE REFERENCE.

SYLVANIA is a registered trademark of OSRAM SYLVANIS Inc. used under licence.

SAFETY INSTRUCTIONS

CAUTION

RISK OF ELECTRIC SHOCK DO NOT OPEN

CAUTION: TO REDUCE THE RISK OF ELECTRIC SHOCK, DO NOT REMOVE COVER (OR BACK). NO USER-SERVICEABLE PARTS INSIDE. REFER SERVICING TO QUALIFIED SERVICE PERSONNEL.

DANGEROUS VOLTAGE:
The lightning flash with arrowhead symbol, within an equilateral triangle is intended to alert the user to the presence of uninsulated dangerous voltage within the product's endosure that may be of sufficient magnitude to constitute a risk of electric shock to persons.

ATTENTION:
The exclamation point within an equilateral triangle is intended to alert the user to the presence of important operating and maintenance (servicing) instructions in the literature accompanying the appliance.

FCC WARNING:
This equipment may generate or use radio frequency energy. Changes or modifications to this equipment may cause harmful interference unless the modifications are expressly approved in the instruction manual. The user could lose the authority to operate this equipment if an unauthorized change or modification is made.

SURGE PROTECTORS:
It is recommended to use a surge protector for AC connection. Lightning and power surges ARE NOT covered under warranty for this product.

FCC ID: 2ASQA6968071

INFORMATION:
This equipment has been tested and found to comply with the limits for a Class B digital device, pursuant to Part 15 of the FCC Rules. These limits are designed to provide reasonable protection against harmful interference in a residential installation. This equipment generates, uses and can radiate radio frequency energy and, if not installed and used in accordance with the instructions, may cause harmful interference to radio communications. However, there is no guarantee that interference will not occur in a particular installation. If this equipment does cause harmful interference to radio or television reception, which can be determined by turning the equipment off and on, the user is encouraged to try to correct the interference by one or more of the following measures:

* Reorient or relocate the receiving antenna.
* Increase the separation between the equipment and receiver.
* Connect the equipment into an outlet on a circuit different from that to which the receiver is connected.
* Consult the dealer or an experienced radio/TV technician for help.

The equipment complies with FCC radiation exposure limits set forth for an uncontrolled environment.
The equipment should be installed and operated with minimum distance 20cm between the radiator & your body.

SAFETY INSTRUCTIONS

Before using the unit, be sure to read all operating instructions carefully. Please note that these are general precautions and may not pertain to your unit. For example, this unit may not have the capability to be connected to an outdoor antenna.

1. **READ INSTRUCTIONS**
   All the safety and operating instructions should be read before the product is operated.
2. **RETAIN INSTRUCTIONS**
   The safety and operating instructions should be retained for future reference.
3. **HEED WARNINGS**
   All warnings on the product and in the operating instructions should be adhered to.
4. **FOLLOW INSTRUCTIONS**
   All operating and use instructions should be followed.
5. **CLEANING**
   Unplug this product from the wall outlet before cleaning. Do not use liquid cleaners or aerosol cleaners. Use a dry cloth for cleaning.
6. **ATTACHMENTS**
   Do not use attachments not recommended by the product's manufacturer as they may cause hazards.
7. **WATER AND MOISTURE**
   Do not use this product near water–for example: near a bathtub, washbowl, kitchen sink or laundry tub; in a wet basement; or near a swimming pool.
8. **ACCESSORIES**
   Do not place this product on an unstable cart, stand, tripod, bracket or table. The product may fall, causing serious injury and serious damage to the product. Use only with a cart, stand, tripod, bracket or table recommended by the manufacturer or sold with the product. Any mounting of the product should follow the manufacturer's instructions, and should use a mounting accessory recommended by the manufacturer.

PORTABLE CART WARNING (symbol provided by RETAC)

8A. An appliance and cart combination should be moved with care. Quick stops, excessive force and uneven surfaces may cause the appliance and cart combination to overturn.

9. **VENTILATION**
   Slots and openings in the cabinet and in the back or bottom are provided for ventilation, to ensure reliable operation of the product and to protect it from overheating. These openings must not be blocked or covered. The openings should never be blocked by placing the product on a bed, sofa, rug or other similar surface. This product should never be placed near or over a radiator or heat source. This product should not be placed in a built-in installation such as a bookcase or rack unless proper ventilation is provided or the manufacturer's instructions have been adhered to.
10. **POWER SOURCES**
    This product should be operated only from the type of power source indicated on the marking label. If you are not sure of the type of power supply to your home, consult your appliance dealer or local power company. For products intended to operate from battery power, or other sources, refer to the operating instructions.
11. **GROUNDING OR POLARIZATION**
    This product is equipped with a polarized alternating-current line plug (a plug having one blade wider than the other). This plug will fit into the power outlet only one way. This is a safety feature. If you are unable to insert the plug fully into the outlet, try reversing the plug. If the plug should still fail to fit, contact your electrician to replace your obsolete outlet. Do not defeat the safety purpose of the polarized plug.
12. **POWER-CORD PROTECTION**
    Power-supply cords should be routed so that they are not likely to be walked on or pinched by items placed upon or against them, paying particular attention to cords at plugs, convenience receptacles, and the point where they exit from the appliance.
13. **LIGHTNING**
    To protect your product from a lightning storm, or when it is left unattended and unused for long periods of time, unplug it from the wall outlet and disconnect the antenna or cable system. This will prevent damage to the product due to lightning and power-line surges.
14. **POWER LINES**
    An outside antenna system should not be located in the vicinity of overhead power lines or other electric light or power circuits, or where it can fall into such power lines or circuits. When installing an outside antenna system, extreme care should be taken to keep from touching such power lines or circuits as contact with them might be fatal.
15. **OVERLOADING**
    Do not overload wall outlets and extension cords as this can result in a risk of fire or electric shock.
16. **OBJECT AND LIQUID ENTRY**
    Never push objects of any kind into this product through openings as they may touch dangerous

SAFETY INSTRUCTIONS

voltage points or short out parts that could result in fire or electric shock. Never spill or spray any type of liquid on the product.

17. **OUTDOOR ANTENNA GROUNDING**
    If an outside antenna is connected to the product, be sure the antenna system is grounded so as to provide some protection against voltage surges and built-up static charges. Section 810 of the National Electric Code, ANSI/NFPA 70, provides information with respect to proper grounding of the mast and supporting structure, grounding of the lead-in wire to an antenna discharge product, size of grounding conductors, location of antenna discharge product, connection to grounding electrodes and requirements for grounding electrodes.

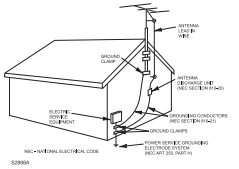

EXAMPLE OF ANTENNA GROUNDING AS PER NATIONAL ELECTRICAL CODE

18. **SERVICING**
    Do not attempt to service this product yourself as opening or removing covers may expose you to dangerous voltage or other hazards. Refer all servicing to qualified service personnel.
19. **REPLACEMENT PARTS**
    When replacement parts are required, be sure the service technician uses replacement parts specified by the manufacturer or those that have the same characteristics as the original part. Unauthorized substitutions may result in fire, electric shock or other hazards.
20. **SAFETY CHECK**
    Upon completion of any service or repairs to this product, ask the service technician to perform safety checks to determine that the product is in proper operating condition.
21. **WALL OR CEILING MOUNTING**
    The product should be mounted to a wall or ceiling only as recommended by the manufacturer.
22. **DAMAGE REQUIRING SERVICE**
    Unplug the product from the wall outlet and refer servicing to qualified service personnel under the following conditions:
    a. When the power-supply cord or plug is damaged.
    b. If liquid has been spilled or objects have fallen into the product.
    c. If the product has been exposed to rain or water.
    d. If the product does not operate normally by following the operating instructions. Adjust only those controls that are covered by the operating instructions, as an adjustment of other controls may result in damage and will often require extensive work by a qualified technician to restore the product to its normal operation.
    e. If the product has been dropped or the cabinet has been damaged.
    f. When the product exhibits a distinct change in performance this indicates a need for service.
23. **HEAT**
    The product should be situated away from heat sources such as radiators, heat registers, stoves or other products (including amplifiers) that produce heat.
24. **NOTE TO CATV SYSTEM INSTALLER**
    This reminder is provided to call the CATV system installer's attention to Article 820-40 of the NEC that provides guidelines for proper grounding and, in particular, specifies that the cable ground shall be connected to the grounding system of the building, as close to the point of cable entry as practical.

OVERVIEW - Location Controls

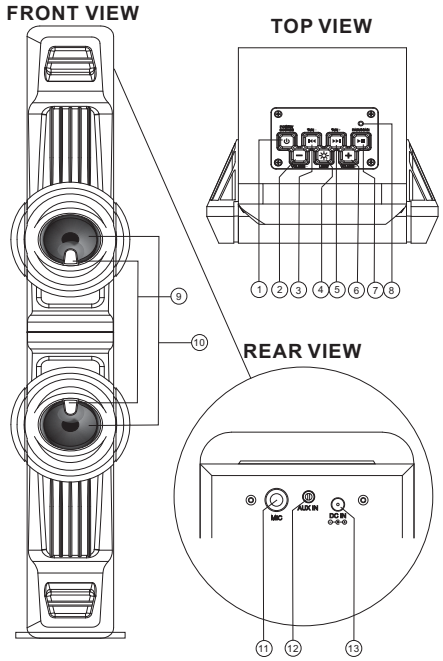

OVERVIEW - Controls Function (Main Unit)

1	POWER / SOURCE Button	Power on: Press once this button. Power off: Press and hold this button for 2 seconds. Source: When the unit is on, press once to change the mode to Bluetooth, FM and AUX.
2	VOLUME - Button	Press the button to decrease the volume sound.
3	PREVIOUS / TUN- Button	Press the button to select previous music track. When unit turn on Bluetooth mode. In FM mode, press the button to tune the radio frequency downward
4	LIGHT Button	Press the button to turn on or off the light
5	NEXT / TUN+ Button	Press the button to select next music track. When unit turn on Bluetooth mode. In FM mode, press the button to tune the radio frequency upward
6	VOLUME + Button	Press the button to increase the volume sound.
7	PLAY/PAUSE/PAIR/ SCAN Button	Bluetooth mode, when the unit is on and playing the song, press the button to play / Pause the song. Press and hold this button for 2 seconds to disconnect the Bluetooth connection and go into pairing mode. FM mode: Press and hold to scan stations in FM band and store stations automatically.
8	BT/AUX IN/FM Indicator	Indicate the Bluetooth mode, FM mode and AUX in mode. Blue LED on: Bluetooth mode, Red LED on: FM mode, Purple LED on: AUX in mode.
9	LIGHT	LED light
10	SPEAKER	Full range speaker
11	MIC Jack	Insert MIC for MIC input
12	AUX IN Jack	Connect the device Line out or Aux out.
13	DC IN Jack	Connect the external adapter for unit main power.

SETUP – Connect Power

Plug the included AC adapter into the standard AC power outlet to power the Speaker unit. Connect small end to DC input jack of main unit.

After adapter connection, press the Power/Source button to turn on/off (long press) the unit.

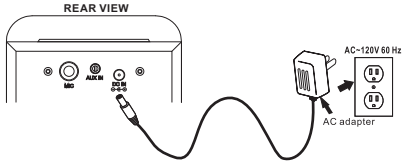

SETUP – Connect Bluetooth Device (Ext. Mobile)

BLUETOOTH PAIRING

Pairing is the term used when two Bluetooth devices are connected wirelessly for the first time. This allows the devices to see each other and sets up a one to one communication channel between both devices.

To begin pairing with a Bluetooth device

1. Press the ⏻ Power/Source button to turn on unit.
2. The unit turn on is default in Bluetooth mode, the indicator will flash blue, the unit is now ready to pairing (link) with your Bluetooth device.
3. When pairing, remain within 3 feet of the unit.
4. Turn on Bluetooth function of your device and enable the search or scan function to find **" SYLVANIA SP800 "**. (see your device's instructions to add or setup a Bluetooth device).
5. Select **" SYLVANIA SP800 "** from the device list when it appears on your device screen.
6. When successfully paired and connected, the Indicator will be light blue and will hear connected sound from the unit. Press the ▶II button, the music will be playing.
7. If you want change to pair with another Bluetooth Enable Device. Press and hold the **PAIR** button. The indicator will flash blue and the unit will go into Pairing / Discoverable mode again.

PLAY THE BLUETOOTH

You can play music from your Bluetooth device wirelessly to unit after successfully pairing.

1. If connected device not playing, press the ▶II button on your Bluetooth device or the ▶II button on unit to play or pause the Bluetooth device playback.
2. Press the ⏮ or ⏭ button to search different music files of external device.
3. Slowly press ⊟ or ⊞ button of your unit and your Bluetooth device until you reach a comfortable listening level.

SETUP – Connect FM Radio

Radio Reception

This speaker unit is equipped with internal FM radio antenna. To improve radio reception, slightly rotate the unit or move the internal unit to a different area of the room until the best reception is obtained.

1. Press the ⏻ Power/Source button to turn on unit
2. Press the ⏻ Power/Source button unit to select FM mode, the indicator will light purple.
3. Press and hold the **SCAN** button to search stations in FM band and will store stations automatically.
4. Press ⏮ / TUN- or ⏭ / TUN+ button to search the previous or next radio station through the FM band.

SETUP – Connect Aux In / Line In / Audio In (External Device)

You can play other music sources (iPod, MP3 or other digital audio players) through the speakers of this unit by connecting the AUX IN jack to your external player's audio out jack or headphone jack.

1. Plug one end of an audio 3.5mm plug cable (not included) into the AUX IN jack at rear side of unit (follow below figure) and the other end of the cable to the headphone jack of your digital audio player.
2. Press the ⏻ POWER/SOURCE button to turn on the unit.
3. Press the ⏻ POWER/SOURCE button unit to select LINE IN mode, the indicator will light red.
4. Make sure your external music player is turned on.
5. Start music playback on your external music player.
6. Slowly adjust both the volume controls of your unit and the external device until you reach a comfortable listening level.

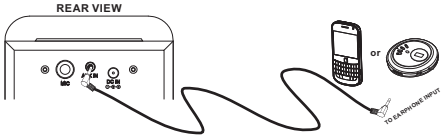

SETUP – Connect Microphone

Plug in the microphone, the unit work as Sing along Karaoke function

1. Plug the microphone (see below figure) into the MIC jack.
2. Slide the ON/OFF switch of Microphone
3. Adjust the volume of audio sound from the speaker unit.

Note: The microphone is not included.

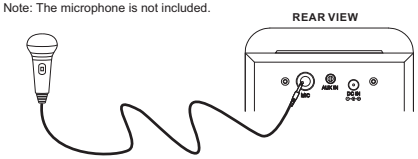

Specification

AC Power Adapter Connect DC Jack	Use included adapter AC~ Input 120 / 60 Hz , DC Output 5V , 1.5A
BT Version	5.0
Radio Frequency	FM 87.5 – 108MHz
AUX IN	3.5mm jack
Master Power Output	5W x 2 RMS
Loud Speakers Spec	3 Inch, 8 Watt , 2 Ohm

Specifications are typical, individual units might vary. They are subject to continuous improvement without notice and without incurring any obligation.

For service assistance and product information,
please call: 1-800-968-9853.
Pour obtenir assistance et information appelez:
1-800-968-9853.

Curtis International Ltd.
7045 BECKETT DRIVE, UNIT 15,
MISSISSAUGA, ON, L5S 2A3
www.curtisint.com

LIMITED PRODUCT WARRANTY

This quality product is warranted to be free from manufacturer's defects in material and workman-ship, provided that the unit is used under the normal operating conditions intended by the manufacturer.

Should you have any problem with this product, please and it is highly recommended to visit our website at www.curtisint.com before you take any other steps as we have additional copies of instruction manuals, operating manuals and trouble shooting tips on our website which gives you the answer on most of the questions you could have in operating the unit.

TERMS OF WARRANTY

C.I. Service Dept. warrants this product to be free from defects in materials and workmanship for 90 days on parts and 90 days on labor. If you originally purchased your product more than 90 days ago, a repair fee may apply.

Nothing within this warranty shall imply that C.I. will be responsible or liable for any damage to any items placed in this product, whether due to any defect of the product, or its use, whether proper or improper.

EXCLUSIONS

Save as herein provided, C.I. Service Dept. (Canada) or C.I. Service Dept. (USA), there are no other warranties, conditions, representations or guarantees, express or implied, made or intended by C.I. or its authorized distributors and all other warranties, conditions, representations or guarantees, including any warranties, conditions, representations or guarantees under any Sale of Goods Act or like legislation or statue is hereby expressly excluded. Save as herein provided, C.I. Service Dept. (Canada) or C.I. Service Dept. (USA), shall not be responsible for any damages to persons or property, including the unit itself, howsoever caused or any consequential damages arising from the malfunction of the unit and by the purchase of the unit, the purchaser does hereby agree to indemnify and save harmless C.I. from any claim for damages to persons or property caused by the unit.

TO OBTAIN REPAIRS UNDER THE TERMS OF THIS WARRANTY

1. The original purchaser must present a copy of the original bill of sale and the service warranty card.
2. Any alterations, abuse, misuse, battery corrosion or accidental damage voids the warranty.
3. The warranty does not cover cabinets and accessories.
4. No warranty or insurance contained or set out shall apply when damage or repair is caused by power failure; damage in transit or when moving the unit; improper power supply; use for commercial or industrial purposes; service calls resulting in customer education, etc.
5. The defective product should be mailed to:

Canada
C.I. Service Dept.
7045 Beckett Drive, Unit 15
Mississauga, ON
L5S 2A3

U.S.A
Curtis International Ltd
c/o CNR International
2626 Vista Industria
Compton, CA 90221
U.S.A.

For service assistance and product information, please call: 1-800-968-9853.
If mailing the product, the freight must be prepaid and a money order for $7.00 should be included to cover the cost of insurance and the return of the product.

6. C.I. reserves the right to repair or replace the parts which have become defective.

To begin the warranty repair process, please note that you MUST obtain a return authorization number prior to returning your product for warranty based support.This can be placed under the 1-800-968-9853 contact line.

Model No. _____ Date Purchased _____ Serial No. _____

©Curtis International Ltd.
7045 BECKETT DRIVE, UNIT 15, MISSISSAUGA, ON, L5S 2A3 www.curtisint.com