SETUP PHOTOS REPORT

Report Number: R12665892-EP1

Applicant	:	Symmons Industries, Inc. 31 Brooks Drive, Braintree, MA 02184, USA
Model	:	WW-05256
FCC ID	:	2ASQP-WW05256
IC	:	24889-WW05256
EUT Description	:	Wireless Battery Power Temperature Sensor
Test Standard(s)	:	FCC 47 CFR PART 15 SUBPART C ISED RSS-247 ISSUE 2 ISED RSS-GEN ISSUE 5

Date Of Issue:
2019-06-11

Prepared by:
UL LLC
12 Laboratory Dr.
Research Triangle Park, NC 27709 U.S.A.
TEL: (919) 549-1400

NVLAP Lab code: 200246-0

REPORT REVISION HISTORY

Ver.	Issue Date	Revisions	Revised By
1	2019-06-11	Initial Issue	Brian T. Kiewra
2	2019-07-18	Updated Customer Name and Address	Lariah Ijames

UL LLC
12 Laboratory Dr., RTP, NC 27709; USA TEL:(919) 549-1400
This report shall not be reproduced except in full, without the written approval of UL LLC

TABLE OF CONTENTS

REPORT REVISION HISTORY **2**

TABLE OF CONTENTS **3**

1. EQUIPMENT UNDER TEST **4**

1.1. EUT DESCRIPTION *4*

1.2. DESCRIPTION OF TEST SETUP *4*

2. SETUP PHOTOS **5**

END OF TEST REPORT **9**

UL LLC
12 Laboratory Dr., RTP, NC 27709; USA TEL:(919) 549-1400

This report shall not be reproduced except in full, without the written approval of UL LLC

1. EQUIPMENT UNDER TEST

1.1. EUT DESCRIPTION

The EUT is a battery operated wireless temperature sensor.

1.2. DESCRIPTION OF TEST SETUP

SUPPORT EQUIPMENT

Support Equipment List				
Description	**Manufacturer**	**Model**	**Serial Number**	**FCC ID**
Leak Sensor	Symmons	WW-05300-KIT	031219012	N/A

I/O CABLES

I/O Cable List						
Cable No.	**Port**	**# of Identical Ports**	**Connector Type**	**Cable Type**	**Cable Length (m)**	**Remarks**
1	Mains	1	Soldered	Mains	<1m	DC Mains
2	I/O	1	4 pin barrel	Sensor	<3m	Connected to leak sensor

SETUP DIAGRAMS

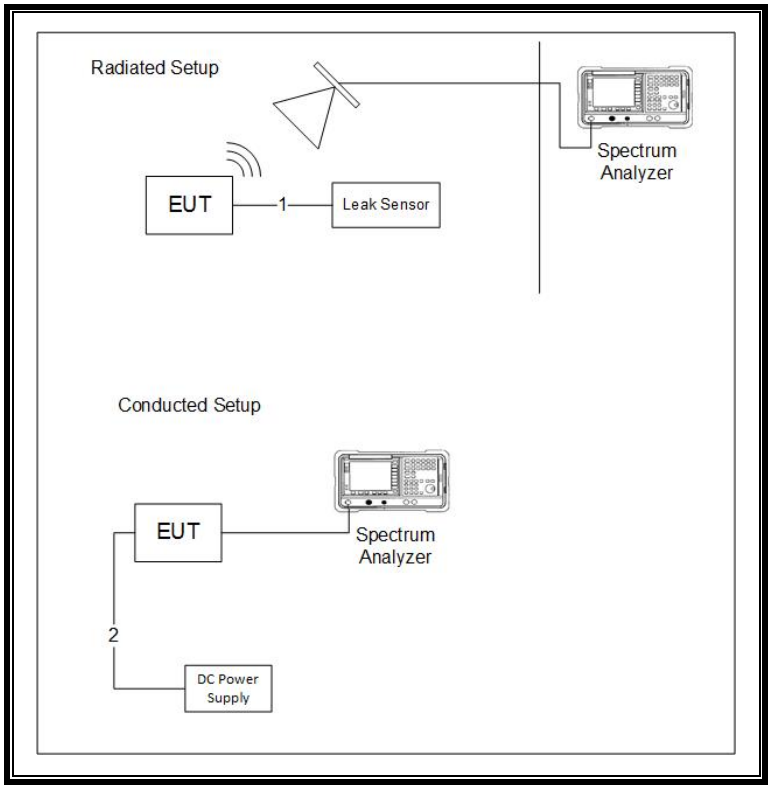

UL LLC
12 Laboratory Dr., RTP, NC 27709; USA TEL:(919) 549-1400
This report shall not be reproduced except in full, without the written approval of UL LLC

2. SETUP PHOTOS

ANTENNA PORT CONDUCTED RF MEASUREMENT SETUP

ANTENNA PORT CONDUCTED PHOTO

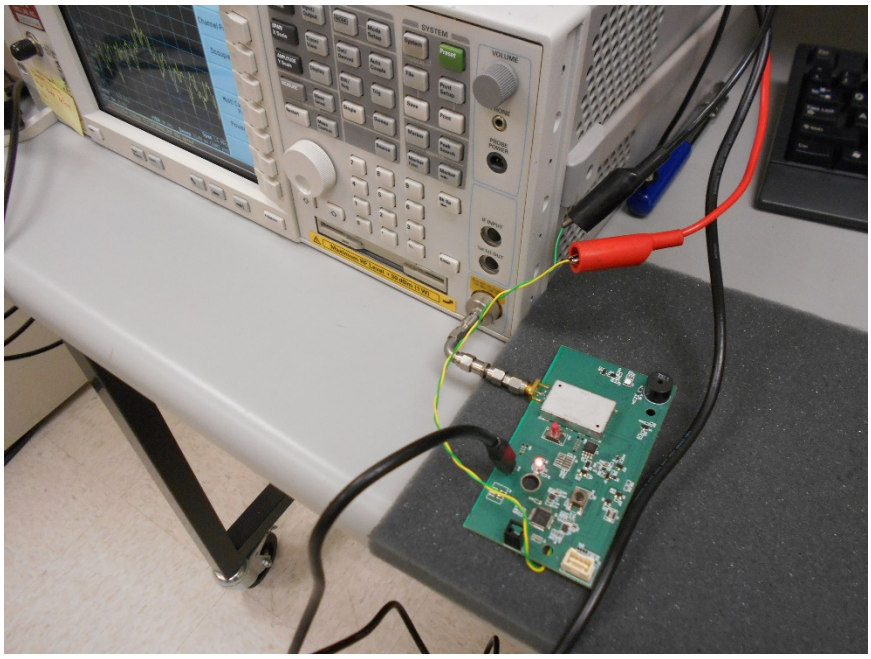

UL LLC
12 Laboratory Dr., RTP, NC 27709; USA TEL:(919) 549-1400

This report shall not be reproduced except in full, without the written approval of UL LLC

RADIATED RF MEASUREMENT SETUP (BELOW 1 GHz)

RADIATED PHOTO (BELOW 1 GHz)

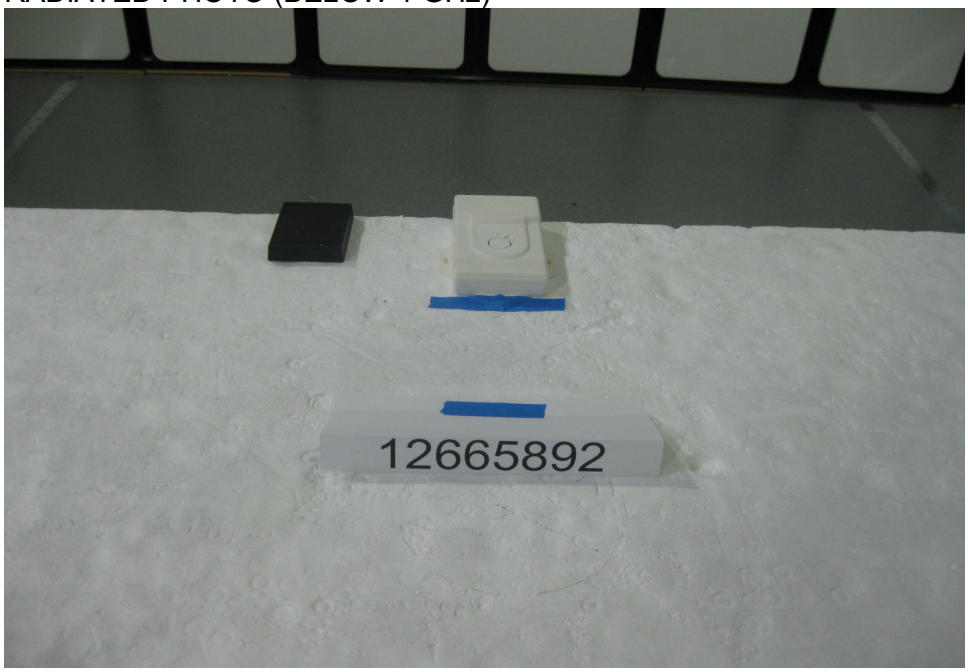

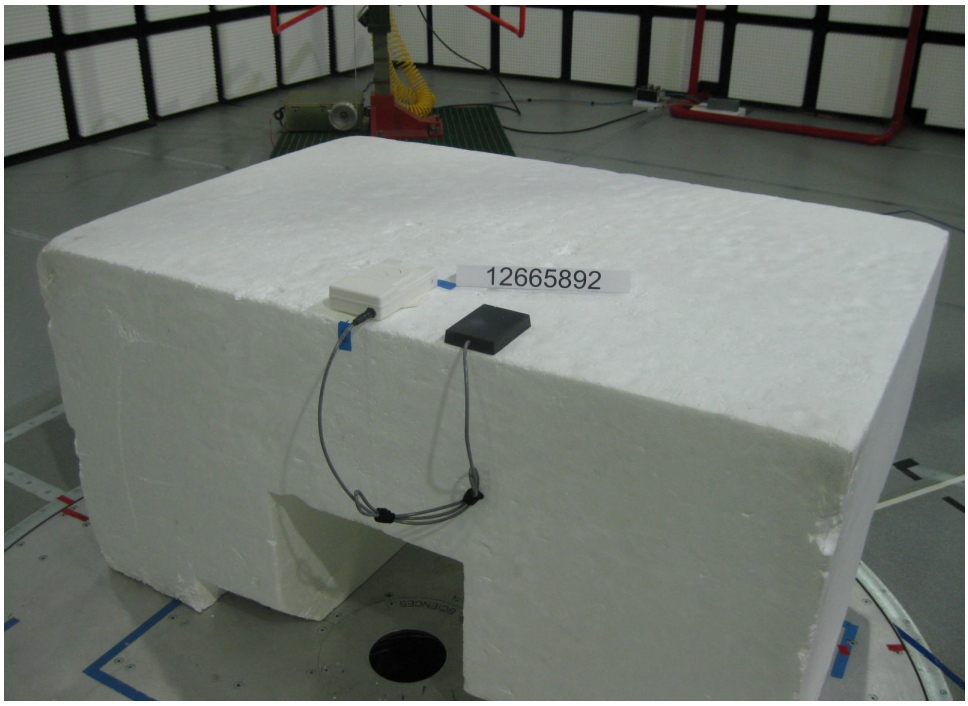

UL LLC
12 Laboratory Dr., RTP, NC 27709; USA TEL:(919) 549-1400

This report shall not be reproduced except in full, without the written approval of UL LLC

RADIATED RF MEASUREMENT SETUP (ABOVE 1 GHz)

RADIATED PHOTO (ABOVE 1 GHz)

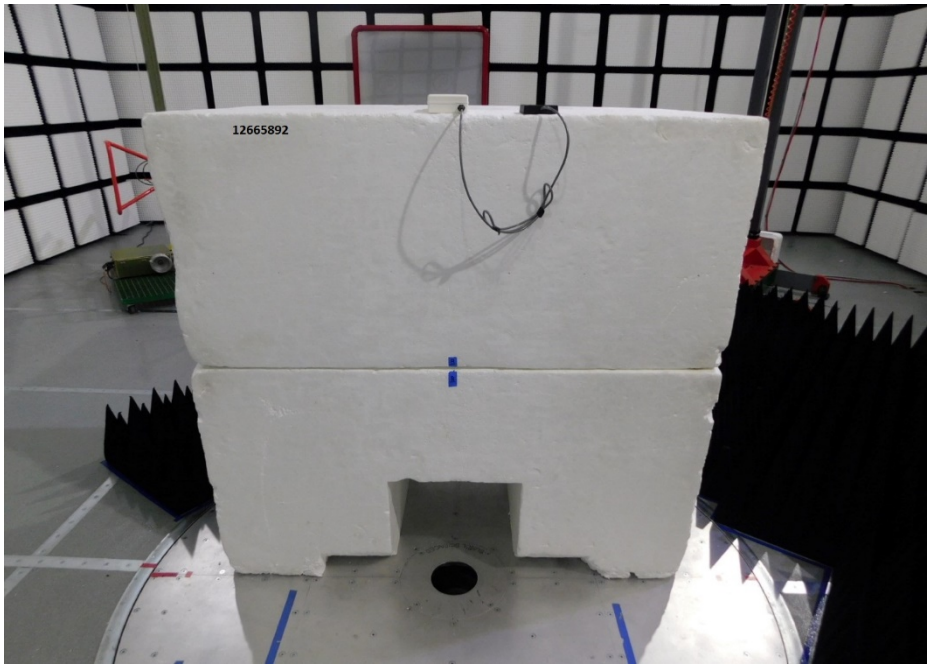

UL LLC
12 Laboratory Dr., RTP, NC 27709; USA TEL:(919) 549-1400

This report shall not be reproduced except in full, without the written approval of UL LLC

X-AXIS PHOTO

Y-AXIS PHOTO

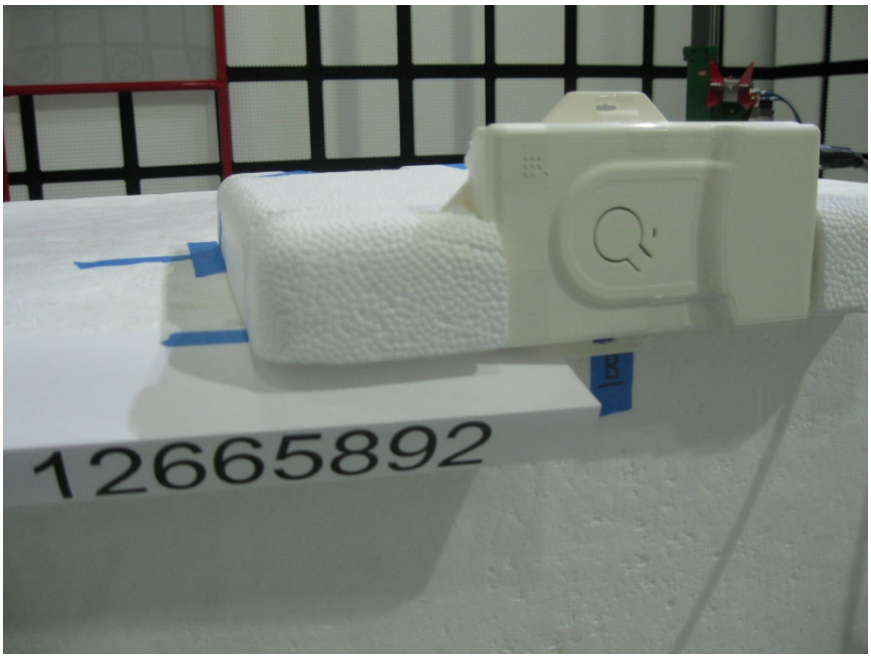

UL LLC
12 Laboratory Dr., RTP, NC 27709; USA TEL:(919) 549-1400
This report shall not be reproduced except in full, without the written approval of UL LLC

Z-AXIS PHOTO

END OF TEST REPORT

UL LLC
12 Laboratory Dr., RTP, NC 27709; USA TEL:(919) 549-1400
This report shall not be reproduced except in full, without the written approval of UL LLC