FB 9083 01

IEEE 802.11b/g/n 1T1R USB Wi-Fi Module

Features Order ModuleType：

Supported WLAN Standard	Standard USB Interface
IEEE Std. 802.11b	Supported USB1.1/USB2.0
IEEE Std. 802.11g	Support Max data rates of
IEEE Std. 802.11n	Rates of 150Mbps
Working frequency	Support Single
2.412~2.462GHz	

Description

FB 9083 01 is a highly integrated single-chip 802.11b/g/n Wireless LAN (WLAN) network USB interface (USB 1.1/2.0 compliant) controller. It combines a WLAN MAC, a 1T1R capable WLAN baseband, and WLAN RF in a SOC chip. FB 9083-01 provides a complete solution for a high throughput performance integrated wireless LAN device. The FB 9083 01 WLAN baseband implements Orthogonal Frequency Division Multiplexing (OFDM) with 1 transmit and 1 receive path and is compatible with the IEEE 802.11n specification. Features include one spatial stream transmission, short guard interval (GI) of 400ns, spatial spreading, and transmission over 20MHz and 40MHz bandwidth.

Block Diagram

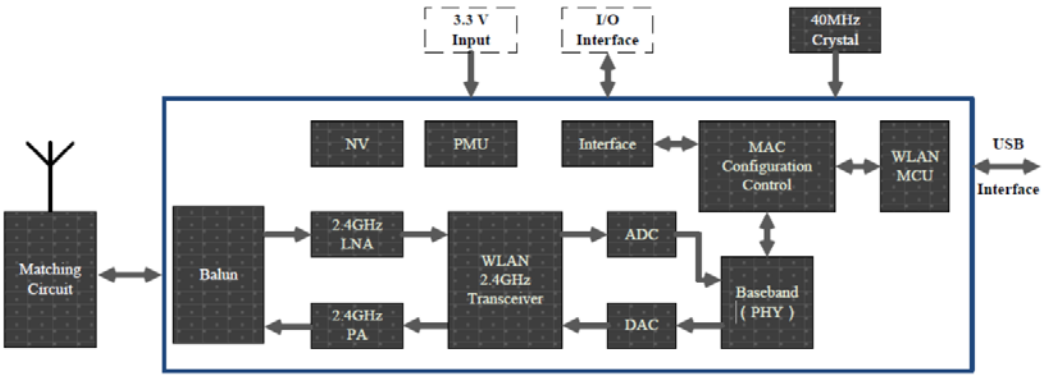

FB 9083 01

Copyright © by Faben Technology

1 General Description

1.1 Introduction

FB 9083 01 is a highly integrated Module 802.11b/g/n Wireless LAN (WLAN) network USB interface controller. Supported2.412GHz~2.462GHz frequency band，USB1.1/USB2.0 interface，Maximum data rate 54Mbps in 802.11g and 150Mbps in 802.11n。

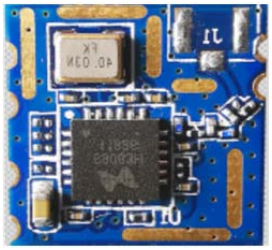

Figure1 Top View

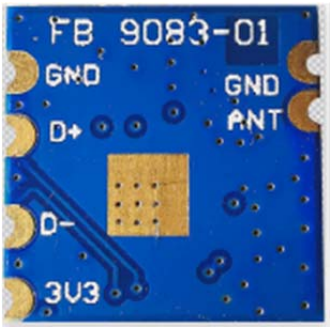

Figure 2 Bottom View

1.2 Protocol Standards

Module support compatible：

IEEE Std.802.11b

IEEEStd.802.11gIEEE

Std.802.11n

Compatible

 Copyright © by Faben Technology

2 Features

FB 9083-01 Module’s features in the tables:

Band	2.412~2.462GHz
Wi-Fi standards	802.11b/g/n(1x1)
Modulation	11b:DBPSK,DQPSKandCCKandDSSS 11g:BPSK,QPSK,16QAM,64QAMandOFDM 11n:MCS0~7OFDM
Phyrate	11b:1,2,5.5and11Mbps 11g:6,9,12,18,24,36,48and54Mbps 11n:MCS0~7,upto150Mbps
Pin NO.	6pin
Host Interface	USB2.0
PCB Stack	4-layers
Dimension	Standard 12.67mmx12.3mmx1.6mm
Ambient Operating Temperature	-20℃to+70℃
Storage Temperature	-40℃to+85℃
Supply Voltage	3.3V+/-10% (Vripple: ≤30mVp-p)
Max current	344mA@11B in TX mode

 Copyright © by Faben Technology

3 Performance

3.1 Pin Descriptions

3.1.1 Pin Definition and Function Description

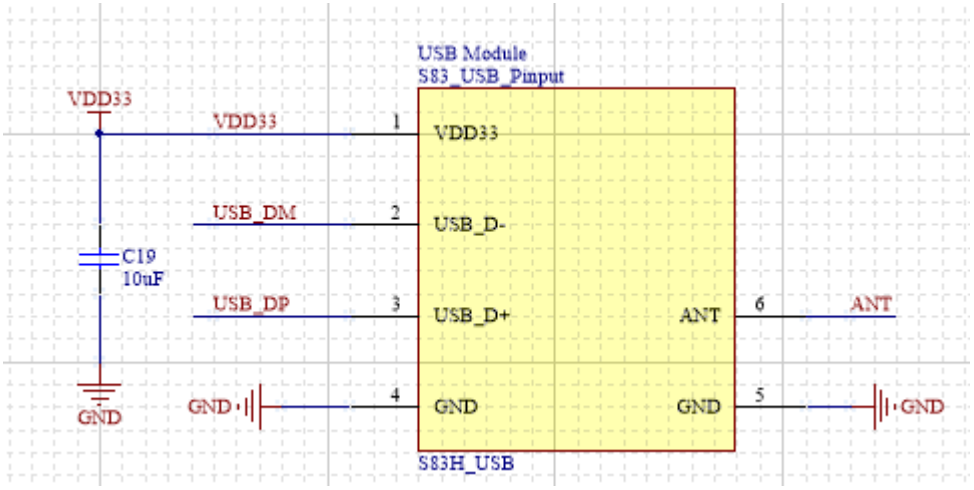

Figure3 Pinout

Pin No.	Pin Definition	Function Description
1	VDD33	DC 3.3V Supply
2	USB_DM	USB-
3	USB_DP	USB+
4	GND	GND
5	GND	GND
6	ANT	ANT

Copyright © by Faben Technology

3.2 RF Spec.

All Parameters are based on the test result of DUT, and the ambient temperature is +25℃.

3.2.1 802.11b mode

Spec	IEEE802.11b			
DSSS / CCK	DSSS / CCK			
Channel	CH1toCH11			
Phyrate	1, 2, 5.5, 11Mbps			
TX				
Power	Min.	Typ.	Max.	Unit
17dBm	16.5	17.0	17.5	dBm

 Copyright © by Faben Technology

Mask @Target Power				
fc +/-11MHz to +/-22MHz	Pass			
fc > +/-22MHz	Pass			
Freq.error				
	Min.	Typ.	Max.	Unit
Frequency error	8.0	5.0	4.8	kHz
RX				
Sensitivity level	Min.	Typ.	Max.	Unit
1Mbps (FER ≦8%)	-98	97	-97	dBm
2Mbps (FER ≦8%)	-95	94	-93	dBm
5.5Mbps (FER ≦8%)	-93	92	-91	dBm
11Mbps (FER ≦8%)	-88	87	-87	dBm
Maximum Input Level (FER ≦8%)	-8	6	-5	dBm

3.2.2 802.11g mode

Spec.	IEEE802.11g			
Mode	OFDM			
Channel	CH1 to CH11			
Phyrate	6, 9, 12, 18, 24, 36, 48, 54Mbps			
TX				
Power Levels	Min.	Typ.	Max.	Unit
15dBm Target	14.2	14.78	15.1	dBm
Mask@target power				
at fc +/-11MHz	Pass			
at fc +/-20MHz	Pass			
at fc > +/-30MHz	Pass			
Constellation Error(EVM)@ target power				

 Copyright © by Faben Technology

	Min.	Typ.	Max.	Unit
6Mbps	-33	-29	-29	dB
9Mbps	-33	-29	-29	dB
12Mbps	-33	-29	-29	dB
18Mbps	-33	-29	-29	dB
24Mbps	-33	-29	-29	dB
36Mbps	-33	-29	-29	dB
48Mbps	-33	-29	-29	dB
54Mbps	-33	-29	-29	dB

Frequency Error

	Min.	Typ.	Max.	Unit
Frequency error	8.0	5.0	4.8	kHz

RX

Minimum Input Level Sensitivity	Min.	Typ.	Max.	Unit
6Mbps (PER ≦10%)	-92	-90	-90	dBm
9Mbps (PER ≦10%)	-92	-90	-91	dBm
12Mbps (PER ≦10%)	-89	-88	-87	dBm
18Mbps (PER ≦10%)	-87	-86	-85	dBm
24Mbps (PER ≦10%)	-84	-83	-82	dBm
36Mbps (PER ≦10%)	-80	-78	-77	dBm
48Mbps (PER ≦10%)	-77	-76	-75	dBm
54Mbps (PER ≦10%)	-76	-75	-75	dBm
Maximum Input Level (FER ≦10%)	-8	-6	-5	dBm

3.2.3 802.11n HT20 mode

 Copyright © by Faben Technology

Spec	IEEE802.11n HT20 @ 2.4GHz			
Mode	11n HT20			
Channel	CH1 to CH11			
Phyrate (MCS index)	MCS0/1/2/3/4/5/6/7			
TX				
Power Levels	Min.	Typ.	Max.	Unit
15dBm Target	13.4	13.8	14.6	dBm
Mask @ target power				
at fc +/-11MHz	Pass			
at fc +/-20MHz	Pass			
at fc > +/-30MHz	Pass			
Constellation Error(EVM)@ target power				
	Min.	Typ.	Max.	Unit
MCS0	-33	-30	-30	dB
MCS1	-33	-30	-30	dB
MCS2	-33	-30	-30	dB
MCS3	-33	-31	-30	dB
MCS4	-33	-31	-30	dB
MCS5	-33	-31	-30	dB
MCS6	-33	-31	-30	dB
MCS7	-33	-30	-30	dB
Frequency Error				
	Min.	Typ.	Max.	Unit
Frequency error	8.0	5.0	4.8	kHz
RX				
Minimum Input Level Sensitivity	Min.	Typ.	Max.	Unit
MCS0 (PER ≦ 10%)	-92	-91	-91	dBm

Copyright © by Faben Technology

MCS1 (PER ≦ 10%)	-88	-87	-87	dBm
MCS2 (PER ≦ 10%)	-87	-86	-85	dBm
MCS3 (PER ≦ 10%)	-84	-83	-82	dBm
MCS4 (PER ≦ 10%)	-81	-80	-79	dBm
MCS5 (PER ≦ 10%)	-76	-75	-74	dBm
MCS6 (PER ≦ 10%)	-75	-74	-73	dBm
MCS7 (PER ≦ 10%)	-74	-73	-72	dBm
Maximum Input Level (FER ≦10%)	-8	-6	-5	dBm

3.2.4 802.11n HT40 Mode

Spec	IEEE802.11n HT40 @ 2.4GHz			
Mode	11n HT40			
Channel	CH3toCH9			
Phyrate	MCS0/1/2/3/4/5/6/7			
TX				
Power Levels	Min.	Typ.	Max.	Unit
14dBm Target	11.8	11.9	12.2	dBm
Mask @ target power				
at fc +/-11MHz	Pass			
at fc +/-20MHz	Pass			
at fc > +/-30MHz	Pass			
Constellation Error(EVM)@target power				
	Min.	Typ.	Max.	Unit
MCS0	-33	-30	-30	dB
MCS1	-33	-30	-30	dB
MCS2	-33	-30	-30	dB
MCS3	-33	-30	-30	dB

 Copyright © by Faben Technology

MCS4	-33	-30	-30	dB
MCS5	-33	-30	-30	dB
MCS6	-33	-30	-30	dB
MCS7	-33	-30	-30	dB
Frequency Error				
	Min.	Typ.	Max.	Unit
Frequency error	8.0	5.0	4.8	kHz

RX				
Minimum Input Level Sensitivity	Min.	Typ.	Max.	Unit
MCS0 (PER ≦ 10%)	-89	-88	-88	dBm
MCS1 (PER ≦ 10%)	-86	-85	-84	dBm
MCS2 (PER ≦ 10%)	-84	-83	-82	dBm
MCS3 (PER ≦ 10%)	-80	-79	-78	dBm
MCS4 (PER ≦ 10%)	-78	-76	-75	dBm
MCS5 (PER ≦ 10%)	-73	-72	-71	dBm
MCS6 (PER ≦ 10%)	-72	-71	-70	dBm
MCS7 (PER ≦ 10%)	-70	-69	-69	dBm
Maximum Input Level (FER ≦10%)	-8	-6	-5	dBm

3.3 DC Power Consumption

IEEE802.11b				
Mode	DSSS/CCK			
Frequency	2412~2462MHz			
Phyrate	1 , 2 , 5.5 , 11Mbps			
State	Min.	Typ.	Max.	Unit
TX Mode (@17dBm)	380	344	201	mA

 Copyright © by Faben Technology

RX Mode		120	98	71	mA
IEEE802.11g					
Mode		OFDM			
Frequency		2412~2462MHz			
Phyrate		6 , 9 , 12 , 18 , 24 , 36 , 48 , 54Mbps			
State		Min.	Typ.	Max.	Unit
TX Mode (@15dBm)		330	294	244	mA
RX Mode		157	107	89	mA
IEEE802.11n					
Mode		OFDM			
Frequency		2412~2462MHz			
Phyrate		6.5 , 13 , 19.5 , 26 , 39 , 52 , 58.5 , 65Mbps			
State		Min.	Typ.	Max.	Unit
TX Mode (@14dBm)		320	282	234	mA
RX Mode		156	107	88	mA
Other					
Mode	Condition	Min.	Typ.	Max.	Unit
Power down	Power down	25	21	21	uA
Sleep	DTM1	10.1	9.1	9.1	mA
	DTM3	4.0	3.6	3.6	mA
Idle	Connected , No packet	115	113	110	mA
Link	Connected , Send a small number of packets	125	122	120	mA

 Copyright © by Faben Technology

4 Interface Circuit Design Reference

4.1 WIFI RF Circuit Design Reference

PIN 6 is the WIFI module of RF interface, between the wiring with the antenna impedance is 50 Ω, recommend the use of curves and lines, length as short as possible. PI type matching network is reserved and designed close to the antenna interface, which is specifically adjusted according to the actual measurement effect of antenna recommendation and typesetting design. The values of the following elements are for reference only. The actual matching results after debugging shall prevail.

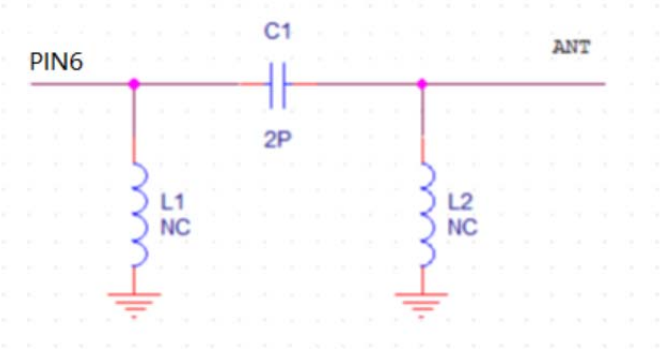

4.2 USB Interface Circuit Design Reference

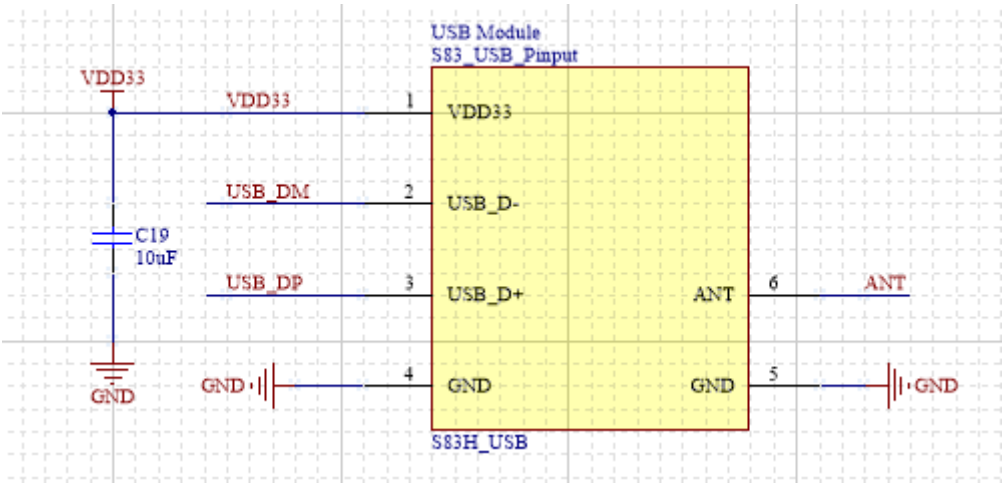

 Copyright © by Faben Technology

5 Antenna On-board Design Reference

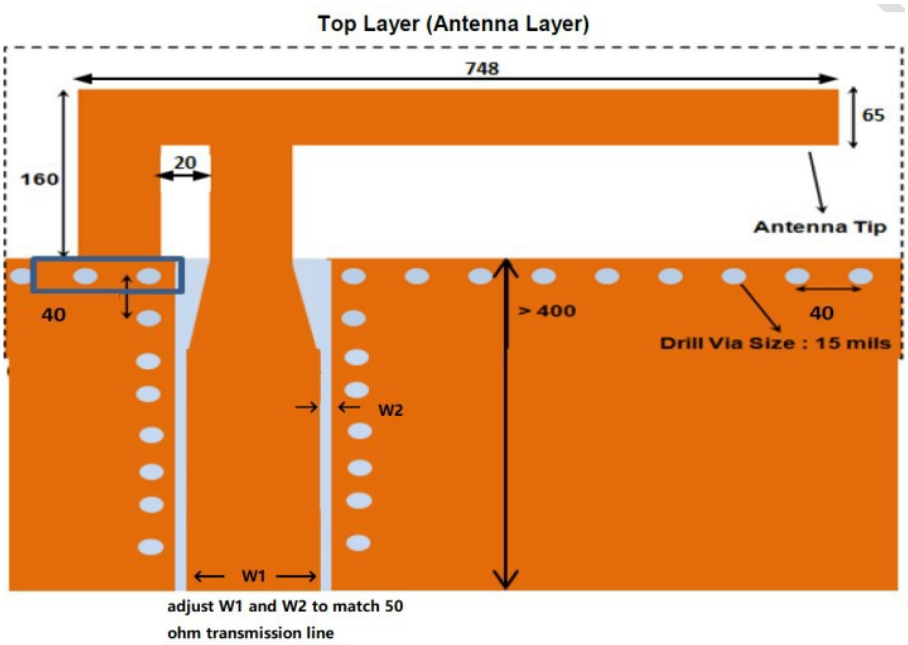

 Copyright © by Faben Technology

6 Package Information

FB 9083-01Modulesize12.3mmx12.67mm， Thickness 1.6mm。Tolerance: +/-0.15mm

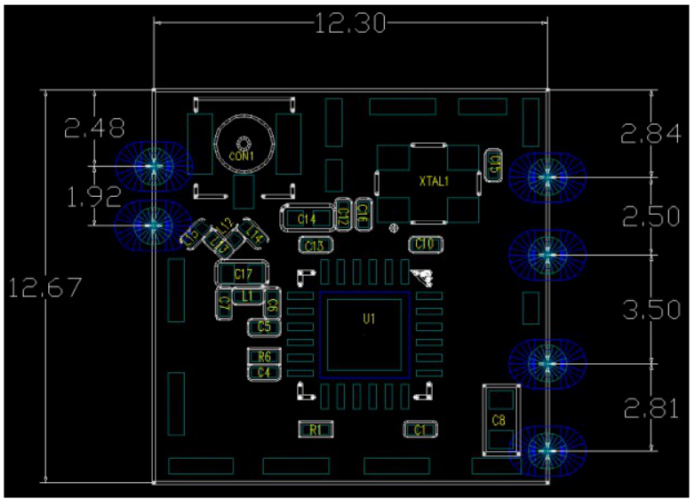

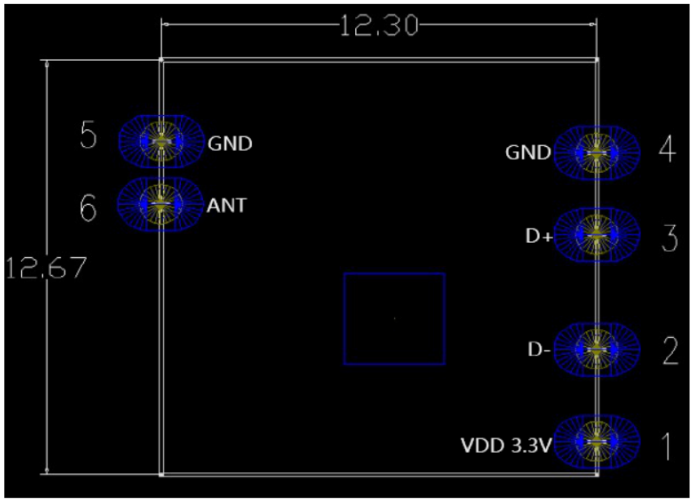

Copyright © by Faben Technology

7 Reflow Soldering

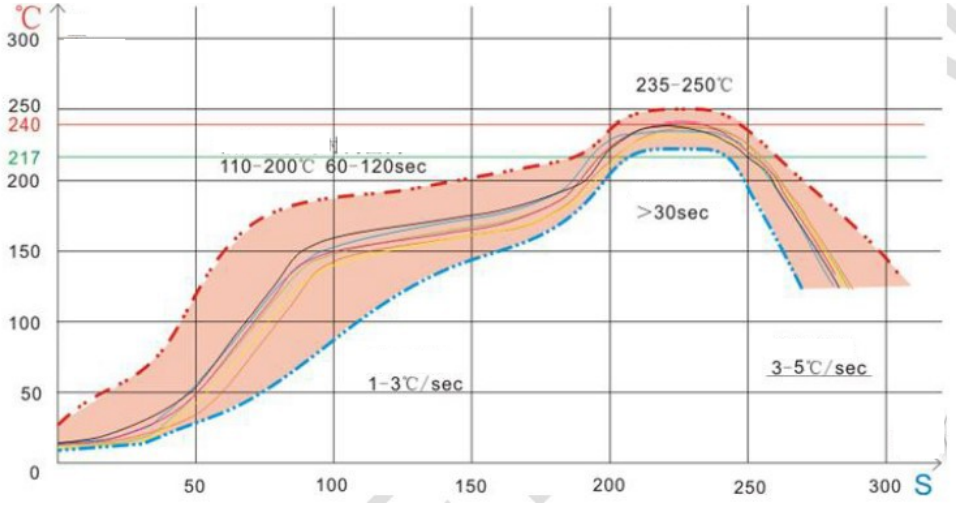

reflow solderingProfile

Heating Zone：temperature：<150℃，time：60～90 S, average slope：1～3℃/S.

Preheating constant Temperature zone：temperature：150℃～200℃，time：60-120 S，average slope 0.3-0.8.

Reflow Zone：Peak temperature： 235℃~250℃(Suggested Peak temperature < 245℃），time: 30-70S.

Cooling Zone：temperature：217℃~170℃，average slope：3～5℃/S.

Solders：Sn & Ag & Cu Lead-free solder (SAC305).

Note： The reflow curve should be balanced between the quality of the solder joint and electron component.

 Copyright©byFabenTechnology

This Wi-Fi module is Limited module.

This module can use shielding methods to meet the necessary requirements to satisfy the module limiting conditions.

Information on test modes and additional testing requirements

a) The modular transmitter has been fully tested by the module grantee on the required number of channels, modulation types, and modes, it should not be necessary for the host installer to re-test all the available transmitter modes or settings. It is recommended that the host product manufacturer, installing the modular transmitter, perform some investigative measurements to confirm that the resulting composite system does not exceed the spurious emissions limits or band edge limits (e.g., where a different antenna may be causing additional emissions).

b) The testing should check for emissions that may occur due to the intermixing of emissions with the other transmitters, digital circuitry, or due to physical properties of the host product (enclosure). This investigation is especially important when integrating multiple modular transmitters where the certification is based on testing each of them in a stand-alone configuration. It is important to note that host product manufacturers should not assume that because the modular transmitter is certified that they do not have any responsibility for final product compliance.

c) If the investigation indicates a compliance concern the host product manufacturer is obligated to mitigate the issue. Host products using a modular transmitter are subject to all the applicable individual technical rules as well as to the general conditions of operation in Sections 15.5, 15.15, and 15.29 to not cause interference. The operator of the host product will be obligated to stop operating the device until the interference has been corrected

Below are steps for TX verification :

wpriv mp_start //enter MP mode

iwpriv mp_channel 1 //set channel to 1 . 2, 3, 4~11 etc.

iwpriv mp_bandwidth 40M=0,shortGI=0 //40M=0 set 20M mode and long GI , 40M=1 set 40M mode

iwpriv mp_ant_tx a //select antenna A for operation

iwpriv mp_txpower patha=44,pathb=44 //set path A and path B Tx power level

iwpriv mp_rate 108 //set OFDM data rate to 54Mbps,ex: CCK 1M = 2, CCK 5.5M = 11, KK, OFDM54M = 108 N Mode: MCS0 = 128, MCS1 = 129.....etc.

iwpriv mp_ctx background,pkt //start packet continuous Tx

iwpriv mp_ctx stop //stop continuous Tx

 Copyright©byFabenTechnology

FCC Statement

Any Changes or modifications not expressly approved by the party responsible for compliance could void the user’s authority to operate the equipment.

This device complies with part 15 of the FCC Rules. Operation is subject to the following two conditions:

(1) This device may not cause harmful interference, and

(2) This device must accept any interference received, including interference that may cause undesired operation.

FCC Radiation Exposure Statement:

This equipment complies with FCC radiation exposure limits set forth for an uncontrolled environment .This equipment should be installed and operated with minimum distance 20cm between the radiator& your body.

Label and compliance information

The outside of final products that contains this module device must display a label referring to the enclosed module. This exterior label can use wording such as: “Contains Transmitter Module FCC ID: 2ASRK-FB908301”,or “Contains FCC ID: 2ASRK-FB908301”, Any similar wording that expresses the same meaning may be used.

Regulatory Module Integration Instructions:

This device complies with part 15.247 of the FCC Rules.

The OEM integrator has to be aware not to provide information to the end user regarding how to install or remove this RF module in the user’s manual of the end product which integrates this module.

The antenna is integral dipole Antenna and maximum gain is 3dBi .

This Wi-Fi module has been granted modular approval for mobile applications. OEM integrators for host products may use the module in their final products without additional FCC certification if they meet the following conditions. Otherwise, additional FCC approvals must be obtained.

The host product with the module installed must be evaluated for simultaneous transmission requirements.

The user’s manual for the host product must clearly indicate the operating requirements and conditions that must be observed to ensure compliance with current FCC RF exposure guidelines.

To comply with FCC regulations limiting both maximum RF output power and human exposure to RF radiation, use this module only with the included antenna.

The final host / module combination may also need to be evaluated against the FCC Part 15B criteria for unintentional radiators in order to be properly authorized for operation as a Part 15 digital device.

 Copyright©byFabenTechnology

Contact Window

Shenzhen Farben information Technology Co., Ltd
Add: 2nd Floor, 5B, Shenzhen Software Industry Base, Haitian 1st road, Science Park South District, Nanshan, Shenzhen, China

Miss. Mu / Mr. Sun
Mobile: 13510537432Mobile:15019223031
Email: Joy.Mu@farbenelec.com
Email: jason.sun@farbenelec.com

 Copyright©byFabenTechnology