Giecy

Quick Start Guide

Voice Amplifier Microphone Headset

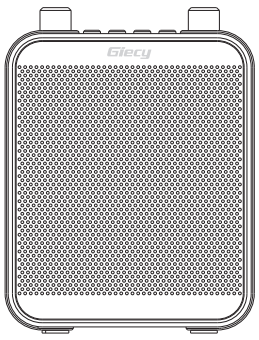

Model No.:G300

Package Contents 1

1 x AC-DC Charger
1 x Adjustable Strap
1 x Quick Start Guide
1 x Wired Microphone Headset
1 x Voice Amplifier

Specfications

- Output Power: RMS 30W max
- Frequency Response: 100 Hz-13KHz
- Battery Voltage: DC7.4V
- Battery Type: Rechargeable Lithium Battery
- Working Temperature: -10°C-60°C

Overview 2

Voice Amplifier(Top View)

1. Reverb Control
2. Mode Selection
3. Previous Track
4. Next Track
5. Pause/Play
6. ON/OFF (Volume Up/Volume Down)
7. DC9V Charging Port
8. USB Disk Interface
9. Microphone Port
10. TF Card Interface
11. Strap Hole
12. Microphone Headset

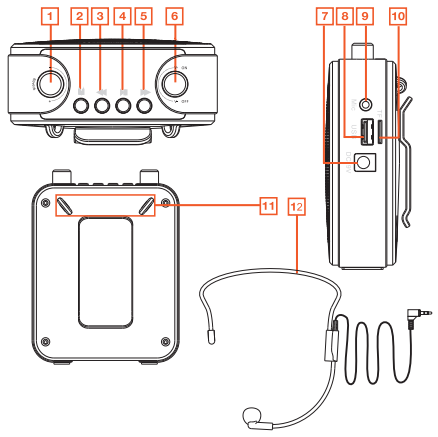

3

Speak Mode:

1.Put the microphone headset on and make sure the mic is exactly in front of your mouse.
2.Insert the microphone to the Mic Port and Clockwise the Power Switch until a simple and clear sound appeared to open the voice amplifier, then the screen will show Hi first and then 5P quickly and the device will broadcast Speak mode.
3.Clockwise / Counter-Clockwise the Power Switch to Adjust Volume.

TF Mode

1.Insert the TF card to active the TF mode, if the device is on, it will broadcast TF Mode and the screen will show TF , then the device will enter the TF Mode automatically. If there is a music in your TF card, the device will play music after the TF Mode is ready.
2.During this Mode, press Mode button to shift from TF Mode—BT Mode—FM Mode---Record Mode---TF Mode.
3.You may also short press the Previous track/ Next track to play the previous sound/ next sound,short press the play/pause button to play/pause the music,long press the Previous track/ Next track to Fast forward/ Fast backward

USB Mode

1.Insert the USB flash to active the USB mode, if the device is on, it will broadcast USB Mode and enter the USB Mode automatically. If there is a music in your USB card, the device will play music after the USB Mode is ready.

2.During this Mode, press Mode button to shift from USB Mode—BT Mode—FM Mode---Record Mode---USB Mode.
3.You may also short press the Previous track/ Next track to play the previous sound/ next sound,short press the play/pause button to play/pause the music, long press the Previous track/ Next track to Fast forward/ Fast backward.

Bluetooth Mode

1.Press the Mode button to Bluetooth Mode. The device will broadcast "Bluetooth Mode" and the screen will show BLUE and flashing very fast.
2.Open your computer/laptop/cellphone which has enabled Bluetooth function and search for "G300".
3.The screen will be long time on and the device will broadcast "connect" after pairing is successful. Then you may enjoy the music from your computer/laptop/cellphone,etc.
4.You may also short press the Previous track/ Next track to play the previous sound / next sound, short press the play/pause button to play/pause the music, long press the Previous track/ Next track to Fast forward/ Fast backward.

FM Mode

1.Press the Mode button to Bluetooth Mode, The device will broadcast "FM mode" and the screen will show FM.
2.Default channel is 87.5Hz, long press the play/pause button 3seconds and release to search and save the channel automatically. Every channel will be saved with the name P01,P02, ...etc.
3.After the channel are all saved, short press the Previous track/Next track button to change the channel.

Attention 4

1.Record Mode is only available when TF card/ USB Flash is on the device.
2.When device is on, insert the TF card first and then USB Flash, it will go into USB Mode, insert the USB Flash first and TF card later, it will go into TF mode.
3.When device is off, no matter which device is insert first(TF card and USB Flash), the default setting will become USB Mode after the device is on.
4.On record Mode, the recordings will be saved on TF card only if TF card and USB Flash are both on the device.
5.The recordings will be saved on TF card/ USB Flash if TF card/USB Flash is on the device
6.During the record mode, short press the play/pause button to start recording and short press that button again to pause. Long press the button to delete the recording.

Charging 5

When the battery indicator on the screen is flashing, it requires for charging, Please power off the device and use the charging adapter provided in the box. It usually takes around 4 hours to full charge the battery. During charging, the battery indicator on the screen will be flashing left and right and show steady light when full charge the battery.

Energy Safe: To save power, switch the G300 power to OFF after use.

Warranty Information

This product carries a 1 Year Limited Warranty. For more information regarding to this warranty, please contact:
support@giecy.com
https://www.facebook.com/giecytechnology

Important Product Information
Product Model _____
Serial Number _____

Wish you a very nice shopping experience when purchasing our products!

FCC Warning Statement

Changes or modifications not expressly approved by the party responsible for compliance could void the user's authority to operate the equipment. This equipment has been tested and found to comply with the limits for a Class B digital device, pursuant to Part 15 of the FCC Rules. These limits are designed to provide reasonable protection against harmful interference in a residential installation. This equipment generates uses and can radiate radio frequency energy and, if not installed and used in accordance with the instructions, may cause harmful interference to radio communications. However, there is no guarantee that interference will not occur in a particular installation. If this equipment does cause harmful interference to radio or television reception, which can be determined by turning the equipment off and on, the user is encouraged to try to correct the interference by one or more of the following measures:

- - Reorient or relocate the receiving antenna.
- - Increase the separation between the equipment and receiver.
- - Connect the equipment into an outlet on a circuit different from that to which the receiver is connected.
-- Consult the dealer or an experienced radio/ TV technician for help.

This device complies with part 15 of the FCC Rules. Operation is subject to the following two conditions: (1) This device may not cause harmful interference, and (2) this device must accept any interference received, including interference that may cause undesired operation.