MINI SPEAKER
OPERATING INSTRUCTIONS

Illustration A:

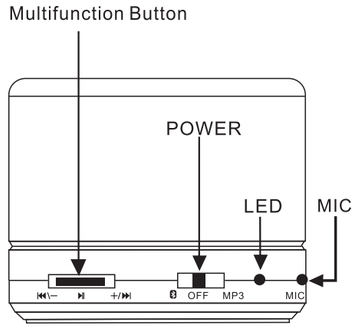

- This powerful speaker functions with wireless Bluetooth ™-enabled devices.

Getting started – see illustration A. page 2. Determine whether the unit is charged or needs charging.

- Move the POWER switch to the Bluetooth ™ symbol .
- If unit is charged – LED will light up BLUE and a voice will confirm the function chosen.
- If the unit is not charged, you will need to connect it with the auxiliary cord to a power source that has a USB port. See illustration B, page 4.
- When the unit is charging, the LED will be RED, Once charged for 2~3 hours and then unplugged, the red light goes off every time.
  Note: the unit can be used while it is charging.

Illustration B:

➢ **Jack Instruction for charging**

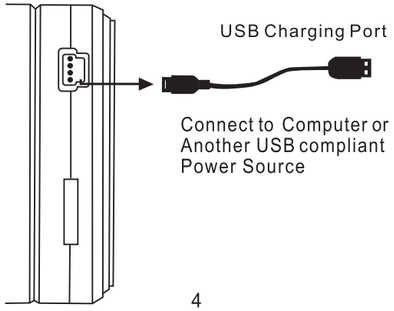

Bluetooth ™ MODE – wireless connection:
To pair the speaker wirelessly with any Bluetooth ™ enabled device – move the POWER switch left to the Bluetooth ™ symbol so that the BLUE LED flashes and the volce prompts "Enter to Bluetooth ™. On your device(cellphone, tablet,PC)go to Settings >choose Bluetooth ™>ON>see S10 listed> tap on S10. The device may connect automatically or may ask if you wish to connect your device to this speaker. Tap S10.
The voice will say "Bluetooth™ connected" and the LED light will be flashing BLUE.
The speaker is now paired to your device.
The music will play through the speaker.
Control the volume, choose next songs, or stop/pause with the controls on your device, or using the Multifunction Button push left (-) or (+) (see Illustration A).

TROUBLESHOOTING: If the pairing was unsuccessful, BLUE and RED will flash alternately, and you will need to reattempt the connection. Make sure any other devices that are near the speaker have their Bluetooth™ setting turned off. Turn the speaker to OFF, then back to Bluetooth™ and repeat the steps above.

LED LIGHT INDICATOR KEY

BLUE flashing: Active Bluetooth ™

BLUE steady: Active auxiliary mode; or Bluetooth™ Connected.

BLUE and RED alternately flashing: Bluetooth ™pairing was unsuccessful – see TROUBLESHOOTING

RED flashing: Low power

RED steady: Charging

RED off: Fully charged

SPECIFICATIONS AND SAFETY WARNINGS

➢ **Specifications**

Battery voltage: 3.7V	Capacity: 350mAh
Charge vollage: 5V	Loudspeaker size: 45mm 4Ω 3W
Net welght: 230g	S/N: ≥95Db
Distortlon: ≤0.5%	Size: 60*60*50mm

➢ **Notice**

- Do not let children play with this product.
- Do not hit or drop product.
- Do not use in very humid and high temperature environments.
- Product performance will decrease when used in cold regions.
- Do not throw product into fire.
- Do not block speaker 's top screen.
- Do not disassemble by yourself.

"The Bluetooth ™word mark and logos are registered trademarks owned by the Bluetooth SIG, Inc. and any use of such marks by Zhuhai Jieli Technology Co.,Ltd is under license.
Other trademarks and tradenames are those of their respective owners."

Bluetooth ™

FCC Statement

This equipment has been tested and found to comply with the limits for a Class B digital device, pursuant to part 15 of the FCC rules. These limits are designed to provide reasonable protection against harmful interference in a residential installation. This equipment generates, uses and can radiate radio frequency energy and, if not installed and used in accordance with the instructions, may cause harmful interference to radio communications. However, there is no guarantee that interference will not occur in a particular installation. If this equipment does cause harmful interference to radio or television reception, which can be determined by turning the equipment off and on, the user is encouraged to try to correct the interference by one or more of the following measures:

-Reorient or relocate the receiving antenna.

-Increase the separation between the equipment and receiver.

-Connect the equipment into an outlet on a circuit different from that to which the receiver is connected.

-Consult the dealer or an experienced radio/TV technician for help.

To assure continued compliance, any changes or modifications not expressly approved by the party.

Responsible for compliance could void the user’s authority to operate this equipment. (Example- use only shielded interface cables when connecting to computer or peripheral devices).

This equipment complies with Part 15 of the FCC Rules. Operation is subject to the following two conditions:

(1) This device may not cause harmful interference, and

(2) This device must accept any interference received, including interference that may cause undesired operation.

RF warning statement:

The device has been evaluated to meet general RF exposure requirement. The device can be used in portable exposure condition without restriction.