LUCATRON®

powered by RAKO GROUP®

Operation Manual

RF Deactivator

DAV200

Introduction

The Deactivator DAV-200 deactivates any standard 8.2MHz deactivatable Labels. The Deactivator sends short bursts of approximate 10 µs. After this period the transmitter is switched off and the receiver becomes active. If a non- deactivated Label or Tag is near the deactivator antenna plate an ECHO signal is received and an audible internal Buzzer alarm is given (Option: external Buzzer).
The electronic unit is line-synchronized via the power supply PSD-300.

Modular Concept

The Deactivator consists of:

– Electronic Unit (DAV 200)

– Power Supply

– Desktop Antenna Pad or Scanner Antenna (Custom Design).

Electronic Unit DAV 200

Pad

Power supply PSD

Connections

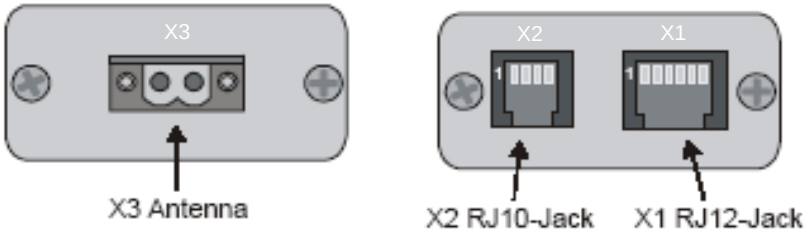

X1 → Power/Synchronization

X2 → External Buzzer and Deactivation enable/disable

X3 → Connection to PAD/Deactivation coil

LED → will light up when label is detected

Optional connections (X2)

External Buzzer

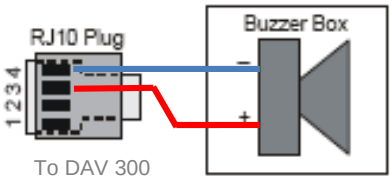

Enable/Disable (Custom Design)

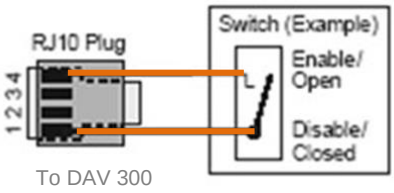

Installation Rules

Distances

Observe a minimum of **50cm** away from Antenna Pad to:

- Electronic Devices:
  - Credit card Readers
  - Cash Registers
  - Computer Systems
  - All electronic Devices

All the above devices could lead to malfunctions.

A minimum distance from Antenna Pad to metal parts:

- Side of antenna 4 cm
- Under the antenna 3 cm

Caution: The deactivation height is reduced with metal parts near the Antenna Pad.

Installation Instruction

Mount the Deactivation Pad in, on, or under the counter. Make sure the counter is without any metal part near to the deactivator pad, this could cause a reduction of detection height or self- alarming.

– Fix the Electronic Unit under the counter.

– Connect the Antenna Pad Cable to X3 on the Electronic Unit. A cable longer than 1 meter will reduce the detection height.

– Options: → To X2 →See Buzzer layout.

– Connect Power Supply (PSD 300) 12 VDC to X1.

– Check for proper function.

- LED will light up if label is detected

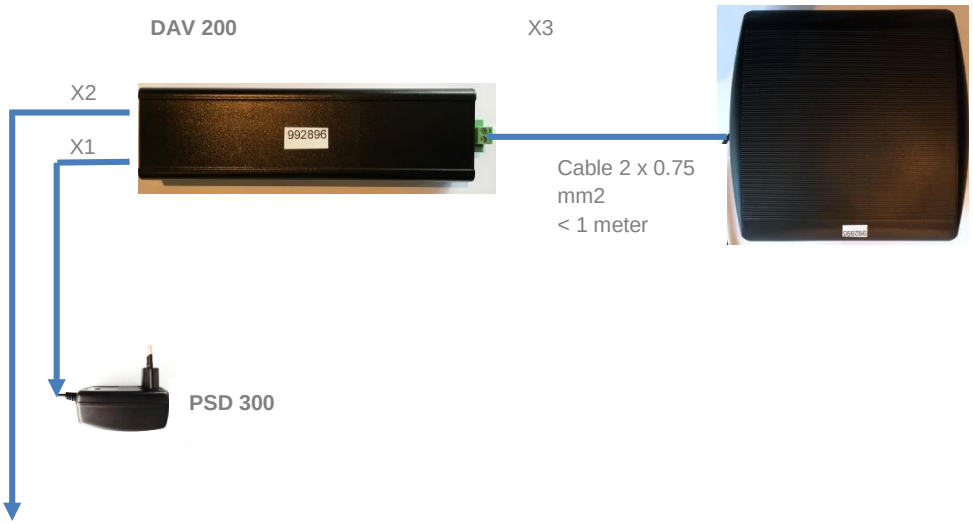

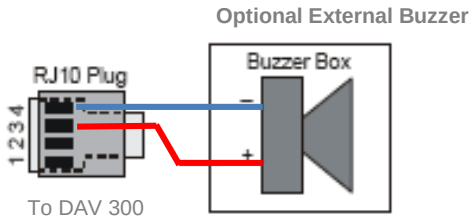

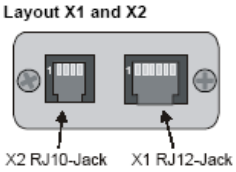

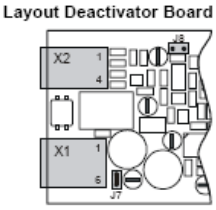

Pad (DAP 300) Mounting

a.) On top of counter

b.) Insert into counter top

c.) Below the counter top

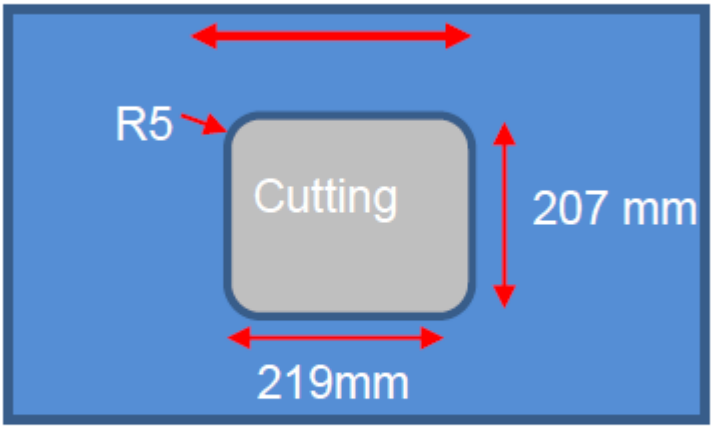

Please ensure that the cutting is not bigger than specified

Pad dimensions (DAP 300)

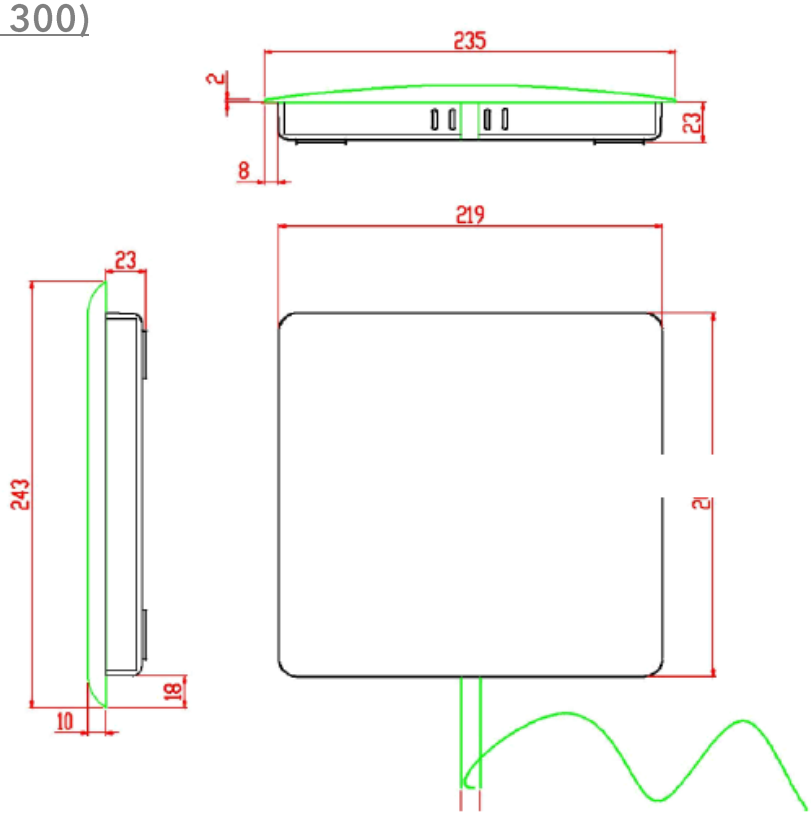

Synchronization

The deactivator should always be synchronized in a Checkout Installation.

Power line synchronization is automatically established with the Lucatron Power Supply PSD-300 (default)

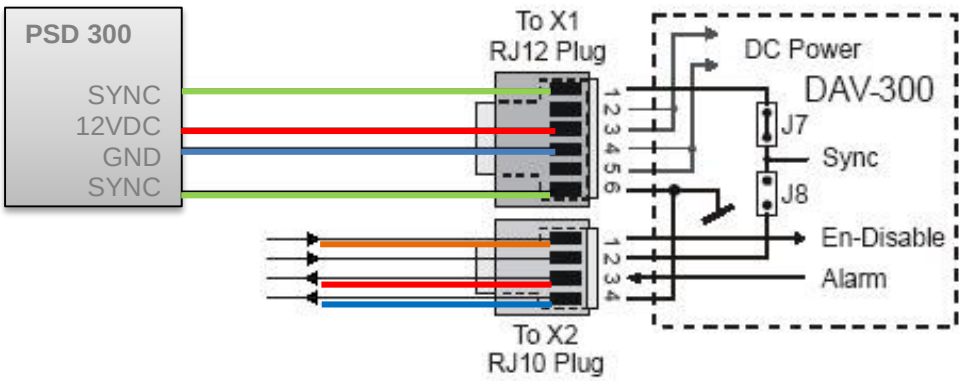

J7 → IN for Line synchronization

J8 → not in use

Scanner integration

The Deactivator **DAV 200** can be used for scanner integration.

The deactivator has an input to "enable/disable" the deactivation. All "Checkpoint ready" scanners have an output to enable deactivation once a valid barcode is read. This output will have to be connected to our deactivator and deactivation will only take place if a valid barcode is detected by the scanner.

The use of the input "enable deactivation" is optional. If the input is not connected the deactivator will deactivate any label present, regardless whether a valid barcode was scanned.

"Checkpoint ready" scanners will have the deactivation coil inside the scanner.

The deactivation coil in the scanner need to be connected to our DAV 200.

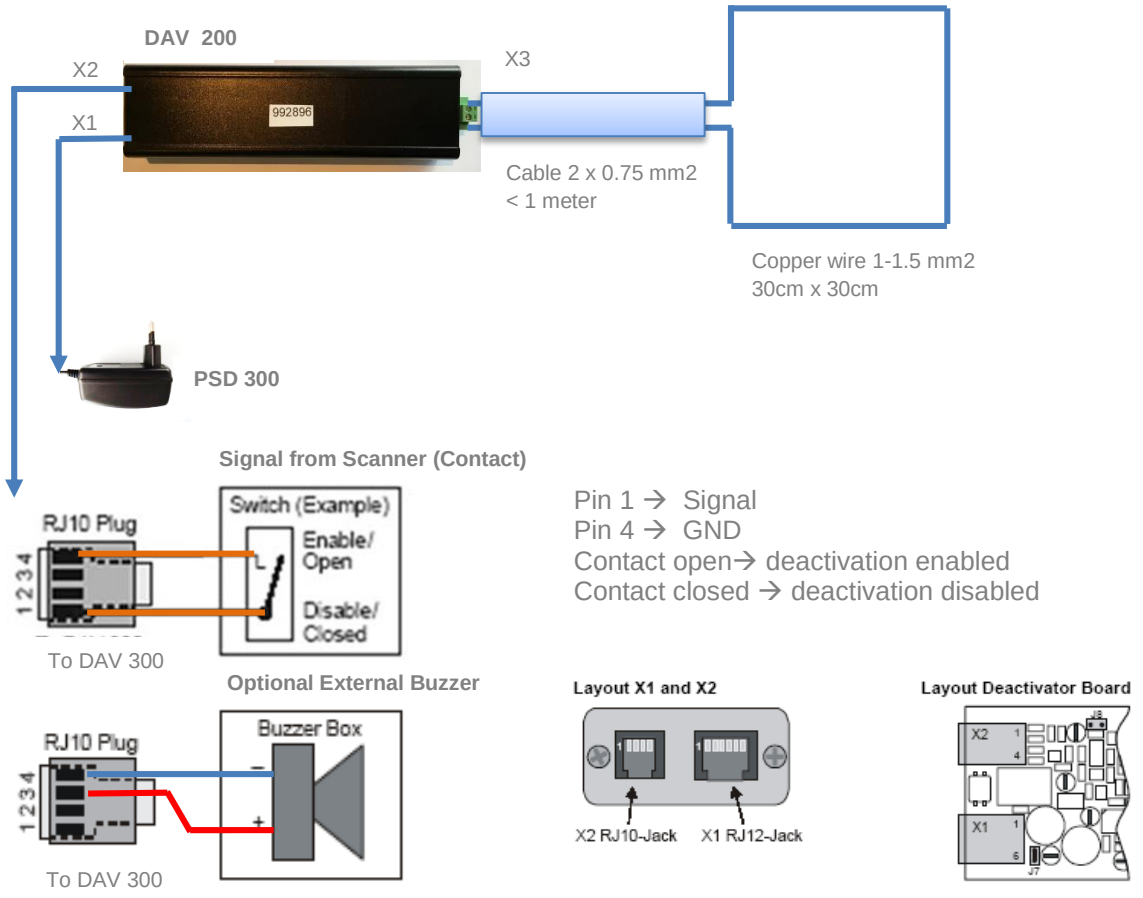

Jumpers setting (factory preset)

All Jumpers pre factory preset. Only when a non-Lucatron pad is connected the "matching" jumpers might have to be changed.

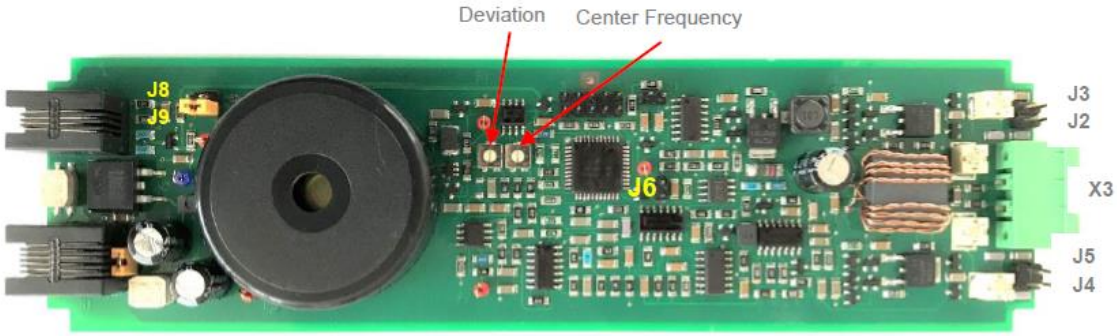

Jumper setting:

J1 → Factory setting (default is OUT)

J2, J3 & J4, J5 → Matching of deactivation coil (for our standard pad DAP 300 no setting is required)

J6 → Factory setting (default is OUT)

J7 → Power line synchronization active (default IN)

J8 → Factory setting (default is OUT)

J9 → internal Buzzer (IN – Buzzer ON (default), OUT – Buzzer OFF)

Technical Specifications Deactivator DAV 200

Frequency Range	8.2 MHz
Line Synchronization	With Power Supply PSD-300 (default)
Antenna Pad Connector	Phönix Type "MSTB 2.5 / STF" (2 Screws)
RJ12 Plug	Power Supply + Line Synchronization
RJ10 Plug	Disable / Enable, Alarm
Alarm (no Volume Control)	Internal (External Buzzer is optional)
Power	1.5 W in standby mode
Power supply (PSD 300)	100-240VAC / 12 VDC / 1,000 mA
Deactivation Height	up to 30 cm*
DAV 200 Dimensions	200 x 57 x 33 mm
Weight including power supply	350 gr (DAV 200)
Certifications	CE

* when 4 x 4cm paper label and standard antennas are used.

Caution: The use of the Power-Supply is **only** allowed in closed rooms.
Unplug the power supply if unit is not in use
Don't use the Power-Supply in the case pins are damaged.
Repair only from authorized persons

Regulatory compliance

This DAV 200complies with European Community regulatory rules for Radio Frequency emissions. It has been awarded with the CE mark.

The CE mark is the official marking required by the European Community for all Electric and Electronic equipment that will be sold, or put into service for the first time, anywhere in the European community. It proves to the buyer and user that this product meets all essential safety and environmental requirements as they are defined in the "European Directives".

This equipment has been tested and found to comply with the limits for a Class B digital device, pursuant to part 15 of the FCC Rules. These limits are designed to provide reasonable protection against harmful interference in a residential installation. This equipment generates, uses and can radiate radio frequency energy and, if not installed and used in accordance with the instructions, may cause harmful interference to radio communications. However, there is no guarantee that interference will not occur in a particular installation. If this equipment does cause harmful interference to radio or television reception, which can be determined by turning the equipment off and on, the user is encouraged to try to correct the interference by one or more of the following measures:

- Reorient or relocate the receiving antenna.
- Increase the separation between the equipment and receiver.
- Connect the equipment into an outlet on a circuit different from that to which the receiver is connected.
- Consult the dealer or an experienced radio/TV technician for help.

Caution: Any changes or modifications to this device not explicitly approved by manufacturer could void your authority to operate this equipment.

This device complies with part 15 of the FCC Rules. Operation is subject to the following two conditions: (1) This device may not cause harmful interference, and (2) this device must accept any interference received, including interference that may cause undesired operation.

This equipment complies with FCC radiation exposure limits set forth for an uncontrolled environment.
This equipment should be installed and operated with minimum distance 20cm between the radiator & your body.