Technology - Art - Sound
Manufactured by elettromedia

POWER FOR THE WAVES
PURE MARINE
CERTIFIED PRODUCT

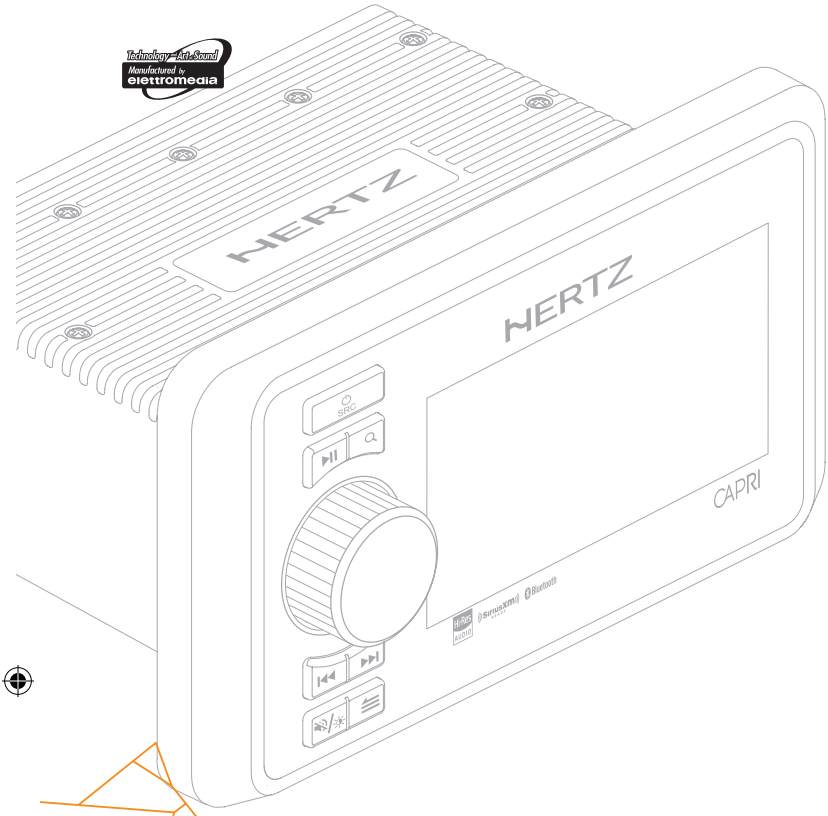

marine
CAPRI H100

Marine grade source units

Rev. 0.1a

SiriusXM READY

QUICK START GUIDE

HERTZ
The Sound Experience

hertz-audio.com

Index

1. **PRECAUTIONS** 3
2. **PACKAGING CONTENTS** 13
3. **DIMENSIONS** 13
4. **MOUNTING** 14
5. **CONNECTIONS** 15
6. **THECNICAL SPECIFICATION** 16

FML035A_QSG_CAPRI H100_REV_A.indd 2 22/12/23 14:23

1 Precauzioni / Precautions / Sicherheitsvorkehrungen / Precauciones / Precauções / Précautions / 注意事項 / Bezpečnostní opatření

WARNING: for your safety, while boating, keep the volume to a level at which external sounds can be heard.

1. This unit uses precision parts and components for its operation. In the event of any operating issues, never open the case or disassemble the unit. Contact your Hertz dealer or service center.
2. FCC STATEMENT
   2.1 This device complies with Part 15 of the FCC Rules. Operation is subject to the following two conditions:
   (1) This device may not cause harmful interference.
   (2) This device must accept any interference received, including interference that may cause undesired operation.
   2.2 Changes or modifications not expressly approved by the party responsible for compliance could void the user's authority to operate the equipment.

   FCC ID: 2ASUD-CAPRIH100

NOTE: This equipment has been tested and found to comply with the limits for a Class B digital device, pursuant to Part 15 of the FCC Rules. These limits are designed to provide reasonable protection against harmful interference in a residential installation. This equipment generates, uses and can radiate radio frequency energy and, if not installed and used in accordance with the instructions, may cause harmful interference to radio communications. However, there is no guarantee that interference will not occur in a particular installation. If this equipment does cause harmful interference to radio or television reception, which can be determined by turning the equipment off and on, the user is encouraged to try to correct the interference by one or more of the following measures:
- Reorient or relocate the receiving antenna.
- Increase the separation between the equipment and receiver.
- Connect the equipment into an outlet on a circuit different from that to which the receiver is connected.
- Consult the dealer or an experienced radio/TV technician for help.

FCC Radiation Exposure Statement.
This equipment complied with FCC radiation exposure limits set forth for an uncontrolled environment. This equipment should be installed and operated with minimum distance 20 cm between the unit & your body.

3. IC warning
   This device complies with Industry Canada's license-exempt RSS standard(s).
   Operation is subject to the following two conditions:
   (1) This device may not cause interference
   (2) This device must accept any interference, including interference that may cause undesired operation of the device.

This Class B digital apparatus complies with Canadian ICES-0003. Le présent appareil est conforme aux CNR d'Industrie Canada applicables aux appareils radio exempts de licence.
L'exploitation est autorisée aux deux conditions suivantes:
(1) l'appareil ne doit pas produire de brouillage
(2) l'utilisateur de l'appareil doit accepter tout brouillage radioélectrique subi, même si le brouillage est susceptible d'en compromettre le fonctionnement.

This equipment complies with IC radiation exposure limits set forth for an uncontrolled environment. The antenna should be installed and operated with minimum distance of 20 cm between the radiator and your body.
This transmitter must not be co-located or operating in conjunction with any other antenna or transmitter.
Cet appareil est conforme aux limites d'exposition aux rayonnements de la IC pour un environnement non contrôlé. L'antenne doit être installé de façon à garder une distance minimale de 20 centimètres entre la source de rayonnements et votre corps.
L'émetteur ne doit pas être colocalisé ni fonctionner conjointement avec à autre antenne ou autre émetteur.

FML035A_QSG_CAPRI H100_REV_A.indd 3 22/12/23 14:23

WARNING: changes or modifications to this unit not expressly approved by the party responsible for compliance could void the user's authority to operate the equipment.

IC : 24882-CAPRIH100

4. The Bluetooth word mark and logos are registered trademarks owned by the Bluetooth SIG, Inc. and any use of such marks by Elettromedia srl is under license. Other trademarks and trade names belong to their respective owners.
5. **USB Port**
   - The USB memory sticks must be recognized as "USB" to work properly. Some models may not operate correctly. In the event data is lost or damaged under any condition, Elettromedia srl shall not be liable for any damage. When using the USB memory stick, we recommend that you backup your data (music) to a personal computer before using.
   - Data (music) files may be damaged when USB memory sticks are removed while the device is reading data, or by static electricity and/or an electrical surge.
   - Connect/disconnect the USB memory stick when it is not accessed.
   - Disconnect the USB memory device when not in use.
6. **Cleaning the Body**
   - Use a soft, dry cloth and gently wipe off any dirt or dust.
   - For persistent dirt, apply some neutral detergent diluted in water on a soft cloth, wipe off the dirt gently, then wipe again with a dry cloth.
   - Do not use benzene, thinner, boat cleaner, etc., as these substances may damage the body or cause the paint to peel. Also, leaving rubber or plastic products in contact with the body for long periods of time may cause stains.

NMEA 2000® Connection
NMEA 2000® is a marine standard for data communication on vessels.
NMEA 2000® Connection permits the CAPRI H100 control from a compatible multi-function displays (MDF).
Remark: Refer to your MFD's manufacturer for device compatibility info

CAUTIONS ON HANDLING

Protect from high temperatures. Exposure to direct sunlight for an extended period of time can produce very high temperature inside the unit. It is recommended to protect the unit with the special cover when not in use.

WARNING: This head unit is designed to be water and spray resistant, but it is not designed to be submerged or to withstand high-pressure water spray. Please exercise care when washing your boat to avoid damaging the head unit. Do not install on submersibles, personal watercraft or any other vessel likely to be under water for even a short time.

FML035A_QSG_CAPRI H100_REV_A.indd 4 22/12/23 14:23

Italiano / Italian

FUNZIONAMENTO GENERALE

ATTENZIONE: all'accensione del dispositivo, l'avvio e l'arresto del motore con il volume elevato al livello massimo possono causare danni all'udito.
Assicurati di regolare il volume in anticipo.

Power On/Off

Note:

- Avviare il motore prima di utilizzare questa unità.
- Fare attenzione a non utilizzare questa unità per molto tempo senza accendere il motore.
- Se si scarica la batteria dell'imbarcazione, potrebbe non essere possibile avviare il motore e ciò può ridurre la durata della batteria.

1. Avviare il motore.

Motore in posizione **ON**

2. Premere per accendere Il dispositivo.

INSTALLAZIONE

PRIMA DI INIZIARE

1. Questo dispositivo è destinato esclusivamente all'uso in imbarcazioni con alimentazione a terra negativa 12 V.
2. Leggere attentamente queste istruzioni.
3. Assicurarsi che il terminale "**-**" della batteria sia scollegato prima di iniziare.
Questo per evitare cortocircuiti durante l'installazione. (Figura 1)

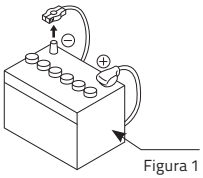

Figura 1

PRECAUZIONI PER L'INSTALLAZIONE

1. Per evitare qualsiasi interferenza, non installare il dispositivo in prossimità del vano motore.
2. L'uso di parti non autorizzate può causare danni permanenti al dispositivo.
3. Controllare sempre i collegamenti dei cavi per garantire una corretta installazione prima di accendere il dispositivo.
4. Consultare il rivenditore più vicino per una corretta installazione o se sono necessari altri accessori per completare l'installazione.
5. Chiedere assistenza se sono necessarie modifiche o praticare fori sulla nave.
6. Non installare il dispositivo dove potrebbe essere esposto a umidità eccessiva, polvere, sporco, particelle estranee o vibrazioni. Vanno inoltre evitate le zone ad alta temperatura del motore, la luce solare diretta o le fonti di calore.
7. Non installare il dispositivo in un luogo in cui possa interferire con il funzionamento dell'imbarcazione, in quanto potrebbe ferire i passeggeri in caso di arresto improvviso o di emergenza.

Informazioni per lo smaltimento di apparecchiature elettroniche ed elettriche (per i paesi europei che dispongono di sistemi di raccolta separata)
I prodotti contrassegnati con il simbolo del contenitore per rifiuti su ruote barrato da una X non possono essere smaltiti insieme ai normali rifiuti domestici. Questi prodotti elettrici ed elettronici devono essere riciclati presso una struttura adeguata, in grado di trattare i prodotti stessi e i loro componenti. Per conoscere dove e come recapitare tali prodotti nel centro più vicino, contattare l'apposito ufficio comunale. Il riciclaggio e lo smaltimento corretto contribuisce a tutelare l'ambiente e ad evitare effetti dannosi alla salute.

FML035A_QSG_CAPRI H100_REV_A.indd 5 22/12/23 14:23

English / English

BASIC OPERATION

WARNING: when the unit is turned on, starting and stopping the engine with its volume raised to the maximum level may cause hearing damage.
Make sure you adjust the volume in advance.

Power On/Off

Note:

- Start the engine before using this unit.
- Be careful about using this unit for a long time without running the engine.
- If you drain the vessel battery, you may not be able to start the engine and this can reduce the service life of the battery.

1. Start the engine.

Engine **ON** position

2. Press ⏻ to turn the unit ON.

INSTALLATION

BEFORE STARTING

1. This device is exclusively for use in vessels with a negative ground 12 V power supply.
2. Read these instructions carefully.
3. Make sure the battery "**-**" terminal is disconnected before starting. This is to prevent short circuits during installation. (Figure 1)

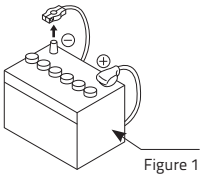

Figure 1

INSTALLATION CAUTIONS

1. In order to avoid any interference, do not install the unit in the proximity of the engine compartment.
2. The use of unauthorized parts can cause permanent damage to the unit.
3. Always check your wire connections to ensure proper installation before turning the unit on.
4. Consult with your nearest dealer for proper installation or if other accessories are needed to complete the installation.
5. Seek assistance if modifications or drilling holes to your vessel is needed.
6. Do not install the unit where it will be subjected to excessive moisture, dust, dirt, foreign particles or vibration. Areas of high temperature from the engine, direct sunlight, or heat sources should also be avoided.
7. Do not install the unit in a location where it will interfere with the vessel operation, or it will injure the passengers if there is a sudden or emergency stop.

Information on electrical and electronic equipment waste (for those European countries which organize the separate collection of waste)
Products which are marked with a wheeled bin with an X through it can not be disposed of together with ordinary domestic waste. These electrical and electronic products must be recycled in proper facilities, capable of managing the disposal of these products and components. In order to know where and how to deliver these products to the nearest recycling/disposal site please contact your local municipal office. Recycling and disposing of waste in a proper way contributes to the protection of the environment and to prevent harmful effects on health.

FML035A_QSG_CAPRI H100_REV_A.indd 6 22/12/23 14:23

Deutsch / German

BETRIEB

WARNUNG: Wenn das Gerät eingeschaltet ist, kann das Starten und Stoppen des Motors bei maximaler Lautstärke zu Gehörschäden führen.
Achten Sie darauf, die Lautstärke im Voraus einzustellen.

Power On/Off

Bemerkung:

- Starten Sie den Motor, bevor Sie dieses Gerät verwenden.
- Seien Sie vorsichtig, wenn Sie dieses Gerät längere Zeit ohne laufenden Motor verwenden.
- Wenn Sie die Schiffsbatterie entleeren, können Sie möglicherweise den Motor nicht mehr starten und dies kann die Lebensdauer der Batterie verringern.

1. Motor starten.

Engine **ON** position

2. drücken, um das Gerät anzuschalten.

INSTALLATION

BEVOR ES LOSGEHT

1. Dieses Gerät ist ausschließlich für den Einsatz in Schiffen mit negativ geerdeter 12 V-Stromversorgung bestimmt.
2. Lesen Sie diese Anleitung sorgfältig durch.
3. Stellen Sie vor der Installation sicher, dass der „**-**" Pol der Batterie abgeklemmt ist.
Dies soll Kurzschlüsse während der Installation verhindern. (Abbildung 1)

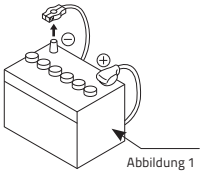

Abbildung 1

VORSICHTSHINWEISE ZUR INSTALLATION

1. Um Störungen zu vermeiden, installieren Sie das Gerät nicht in der Nähe des Motorraums.
2. Die Verwendung nicht zugelassener Teile kann das Gerät dauerhaft beschädigen.
3. Überprüfen Sie immer Ihre Kabelverbindungen, um eine ordnungsgemäße Installation sicherzustellen, bevor Sie das Gerät einschalten.
4. Wenden Sie sich an Ihren nächstgelegenen Händler, um eine ordnungsgemäße Installation zu erhalten oder wenn weiteres Zubehör zur Vervollständigung der Installation benötigt wird.
5. Holen Sie sich Unterstützung, wenn Änderungen oder Bohrungen an Ihrem Schiff erforderlich sind.
6. Installieren Sie das Gerät nicht an einem Ort, an dem es übermäßiger Feuchtigkeit, Staub, Schmutz, Fremdkörpern oder Vibrationen ausgesetzt ist. Bereiche mit hoher Motortemperatur, direkter Sonneneinstrahlung oder Wärmequellen sollten ebenfalls vermieden werden.
7. Installieren Sie das Gerät nicht an einem Ort, an dem es den Schiffsbetrieb stört oder die Passagiere bei einem plötzlichen Stopp verletzt.

Information zu Elektro- und Elektronikaltgeräten (gültig für die europäischen Länder, die eine Abfalltrennung durchführen).
Produkte, die mit einem durchgestrichenen Mülltonnensymbol gekennzeichnet sind, dürfen nicht mit dem normalen Hausmüll entsorgt werden. Diese elektrischen und elektronischen Produkte müssen in geeigneten Einrichtungen, die für die fachgerechte Entsorgung dieser Produkte und Komponenten qualifiziert sind, wieder verwertet werden. Wenden Sie sich bitte an Ihr örtliches Gemeindeamt, um zu erfahren, wo die nächstgelegene Einrichtung für Recycling oder Entsorgung ist und wie diese Produkte dort abgegeben werden können.Die korrekte Wiederverwertung und Entsorgung von Abfall leistet einen Beitrag zum Umweltschutz und beugt Gesundheitsschäden vor.

Español / Spanish

FUNCIONAMIENTO

ADVERTENCIA: cuando el dispositivo este encendido, arrancar y parar el motor con el volumen elevado al máximo, puede causar daños auditivos.
Asegúrese de ajustar el volumen de antemano.

Encendido/Apagado

Nota:

- Encienda el motor antes de utilizar el dispositivo.
- Tenga cuidado al utilizar el dispositivo durante un tiempo prologado, con el motor apagado.
- Si se agota la batería de la embarcación, es posible que no pueda arrancar el motor y esto puede reducir la vida útil de la batería.

1. Motor starten.

Posición de encendido del motor.

2. Pulse para encender el dispositivo.

INSTALACIÓN

ANTES DE EMPEZAR

1. Este dispositivo es de uso exclusivo en embarcaciones con una fuente de alimentación 12 V con toma de tierra negativa.
2. Lea atentamente las instrucciones.
3. Antes de empezar, asegúrese que el borne negativo "**-**" de la batería este desconectado.
Esto es para evitar cortocircuitos durante la instalación. (Figura 1)

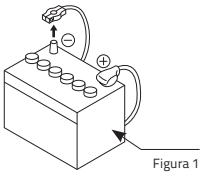

Figura 1

PRECAUCIONES

1. Para evitar cualquier interferencia, no instale el dispositivo cerca del compartimento del motor.
2. El uso de piezas no autorizadas puede causar daños permanentes en el dispositivo.
3. Compruebe siempre las conexiones de los cables para asegurarse de su correcta instalación antes de encender la unidad.
4. Consulte con su distribuidor más cercano para una instalación adecuada o si necesita otros accesorios para completar la instalación.
5. Busque ayuda si es necesario realizar, agujeros o modificaciones en su embarcación.
6. No instale el dispositivo donde vaya a estar sometido a excesiva humedad, polvo suciedad, partículas extrañas o vibraciones. Zonas de con altas temperaturas provocadas por el motor, también debe evitarse la luz directa del sol, o fuentes de calor.
7. No instale el dispositivo en un lugar en el que pueda interferir con el funcionamiento de la embarcación, o en el que pueda dañar a los pasajeros en caso de que se produzca una parada repentina o de emergencia.

Información sobre la eliminación de aparatos electrónicos y eléctricos (para los países europeos que han constituido sistemas de gestión separada de residuos) Los productos que lleven impreso el símbolo del cubo de basura tachado no pueden ser eliminados junto con los residuos domésticos normales. Estos productos electrónicos y eléctricos deben ser eliminados en instalaciones adecuadas, capaces de gestionar la eliminación de estos productos y componentes. Para saber dónde y cómo entregar estos productos al centro de reciclaje/eliminación más cercano, contacte con su oficina municipal. El reciclaje y la eliminación de residuos de la forma adecuada contribuyen a la protección del medio ambiente y a evitar efectos dañinos en la salud.

FML035A_QSG_CAPRI H100_REV_A.indd 8 22/12/23 14:23

Português / Portuguese

OPERAÇÃO BASE

AVISO: quando o aparelho estiver ligado, ligar e desligar o motor com o seu volume elevado ao nível máximo pode causar danos auditivos.
Certifique-se de que ajusta o volume com antecedência

Ligar/Desligar

Nota:

- Ligue o motor antes de utilizar esta unidade.
- Tenha cuidado ao utilizar esta unidade durante muito tempo sem utilizar o motor.
- Se drenar a bateria, pode não ser capaz de ligar o motor e isto pode reduzir a vida útil da bateria.

1. Ligue o motor.

Posição **ON** do motor

2. Pressione para ligar a unidade.

INSTALAÇÃO

ANTES DE COMEÇAR

1. Este dispositivo destina-se exclusivamente a ser utilizado em embarcações com uma alimentação de 12 V.
2. Leia atentamente estas instruções.
3. Certifique-se de que o terminal da batería "**-**" está desligado antes de arrancar.
Isto é para evitar curto-circuitos durante a instalação. (Figura 1)

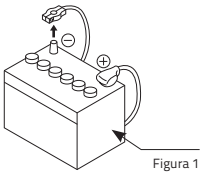
Figura 1

PRECAUÇÕES DE INSTALAÇÃO

1. Para evitar interferências, não instale o aparelho na proximidade do compartimento do motor.
2. A utilização de peças não autorizadas pode causar danos permanentes ao aparelho.
3. Verifique sempre as ligações dos fios para garantir uma instalação adequada antes de ligar o aparelho.
4. Consulte o seu revendedor mais próximo para uma instalação adequada ou se forem necessários outros acessórios para completar a instalação.
5. Procure assistência se forem necessárias modificações ou furos na sua embarcação.
6. Não instale o aparelho onde esteja sujeito a humidade excessiva, poeira, sujidade, partículas estranhas ou vibrações. Áreas de alta temperatura do motor, diretasluz solar, ou fontes de calor também devem ser evitadas.
7. Não instale o aparelho num local onde interfira com a operação do navio, ou irá ferir os passageiros se houver uma paragem súbita ou de emergência.

Informação sobre a eliminação de equipamento eléctrico e electrónico (para os países europeus que constituíram sistemas de recolha de lixo separados) Os produtos com o símbolo do caixote do lixo com um X não podem ser eliminados juntamente com o lixo doméstico normal. Estes produtos eléctricos e electrônicos deverão ser eliminados em pontos adequados capazes de tratar este tipo de produtos e componentes. A fim de saber onde e como depositar estes produtos no ponto de recolha/reciclagem mais próximo de si, entre em contacto com as autoridades locais competentes. A reciclagem e a eliminação correctas contribuem para proteger o ambiente e evitar efeitos prejudiciais para a saúde.

Français / French

FONCTIONNEMENT GÉNÉRAL

ATTENTION: Lorsque vous allumez le dispositif, le départ et l'arrêt au maximum du volume peut causer des dommages auditifs.
Assurez- vous de régler le volume à l'avance

Power: ON/OFF

Note:

- Démarrer le moteur avant d'utiliser cet appareil.
- Attention à ne pas utiliser cet appareil trop longtemps sans allumer le moteur.
- Si la batterie du bateau est épuisée il ne peut être possible de démarrer le moteur et cela peut réduire la durée de vie de la batterie.

1. Démarrer le moteur.

moteur en position **ON**

2. Appuyer pour allumer l'appareil.

INSTALLATION

AVANT DE COMMENCER

1. Cet appareil est destiné exclusivement à l'utilisation dans les bateaux avec alimentation à quai négative 12 V.
2. Lire attentivement ces instructions
3. Assurez vous que la borne de la batterie soit débranchée avant de démarrer, ceci afin d'éviter les courts-circuits lors de l'installation (Image 1)

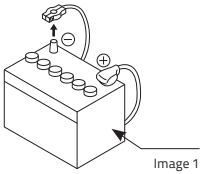

Image 1

PRÉCAUTIONS POUR L'INSTALLATION

1. Pour éviter toute interférence, ne pas installer l'appareil à proximité du compartiment moteur
2. L'utilisation de pièces non autorisées peut causer des dommages permanents à l'appareil
3. Vérifiez toujours les connexions des câbles pour assurer une installation correcte avant d'allumer l'appareil
4. Consulter votre revendeur le plus proche pour une installation correcte ou si d'autres accessoires sont nécessaires pour compléter l'installation
5. Demander de l'aide si des modifications sont nécessaires ou percer des trous sur le navire
6. Ne pas installer l'appareil dans un endroit où il pourrait être exposé à une humidité excessive, poussière, saleté, particules étrangères ou vibrations .Éviter en outre, les zones à haute température du moteur, la lumière directe du soleil et les sources de chaleur doivent être évitées également.
7. Ne pas installer l'appareil dans un endroit où il pourrait interférer avec le fonctionnement du bateau car il pourrait blesser les passagers en cas d'arrêt imprévu ou d'urgence.

Informations relatives aux déchets électriques et électroniques (pour les pays européens assurant le tri sélectif des déchets)
Les produits comportant un logo composé d'une poubelle barrée d'une croix doivent être éliminés séparément des ordures ménagères. Ces produits utilisent des composants électriques ou électroniques qui doivent être recyclés par les déchetterie communale ou un centre de recyclage capables de traiter ces produits et composants. Nous vous invitons à contacter votre mairie afin de savoir comment amener ces produits dans le centre de recyclage le plus proche de votre domicile. Le recyclage et une mise au rebut adaptée contribuent à la préservation de l'environnement et à la prévention contre tout effet nocif pour la santé.

FML035A_QSG_CAPRI H100_REV_A.indd 10 22/12/23 14:23

日本語 / Japanese

■ 基本操作

警告: 本ユニットのボリュウムを最大にした状態でエンジンの始動・停止をおこ なうと、聴覚に障害を引き起こす危険性があります。必ず事前にボリュウムの調整をしてください。

Power On/Off

注意:
- 本ユニットの操作を開始する前にエンジンを始動してください
- エンジンを止めた状態での長時間の使用に注意してください。
- 船舶のバッテリが上がってしまうとエンジンを始動することが出来なくなる可能性があり、バッテリ自体の寿命にも影響を与えます

1. エンジンを始動する.

エンジンをオンのポジションにする

2. 電源ボタンを押して本機の電源をオンにする.

■ インストール方法

作業をはじめる前の注意事項

1. 本機は12Vまたは24Vのバッテリを装備した船舶専用の製品です
2. 事前に必ずこのインストラクションに目を通してください
3. インストール作業中のショートを防止するため、作業を始める前に必ずバッテリのマイナス(-)端子を外しておいてください (Figure 1)

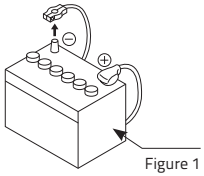
Figure 1

インストールに関わる注意事項

1. 事故防止のためエンジンルーム付近に本機をインストールしないでください
2. メーカー純正以外の部品を使用した場合、本機に永久的な損傷を与える可能 性があります
3. 本機の電源をオンにする前に配線が正しくおこなわれていることを確認して ください
4. 適切なインストール方法や、インストールに他のアクセサリが必要かどうか などに関してはお近くの取扱店にご相談ください
5. 船舶本体に改変や取り付け穴の加工などが必要な場合は専門の業者にご依頼 ください
6. 湿度の高い場所やほこり、汚れなどの異物、振動などにさらされる場所に本 機をインストールしないでください。直射日光により高温になる場所や熱源 の近くへのインストールは避けてください
7. 緊急時に乗員の怪我につながる恐れがあるため、船舶の運航の妨げになるよ うな場所へのインストールはしないでください

電気・電子機器の廃棄物に関する情報 (廃棄物の分別回収を組織化しているヨーロッパ各国用)
Xを入れた輪のごみ箱のマークが付いた製品は普通の家庭用のごみと一緒に処理することはできません。このような電気・電子機器の廃棄物は、これらの製品やコンポーネントを処理できる相応の施設でリサイクルしなければいけません。これらの製品をどこでどのようにして最も近いリサイクル/処理場まで運べばよいかを知るために、お客様の地域の地方自治体事務所に連絡をお取り下さい。廃棄物を相応の方法でリサイクルや処理することは、環境の保護と健康に害のある影響を防止することに貢献します。

FML035A_QSG_CAPRI H100_REV_A.indd 11 22/12/23 14:23

Nederlands / Dutch

BASISBEDIENING

WAARSCHUWING: wanneer het apparaat is ingeschakeld, kan het starten en stoppen van de motor met het volume op het maximale niveau gehoorbeschadiging veroorzaken.
Zorg ervoor dat u het volume van tevoren aanpast.

Inschakelen/uitschakelen

Opmerking:

- Start de motor voordat u dit apparaat gebruikt.
- Wees voorzichtig als u dit apparaat lange tijd gebruikt zonder de motor te laten draaien.
- Als u de accu van het vaartuig leegt, kunt u de motor mogelijk niet starten en dit kan de levensduur van de batterij verkorten.

1. Start de motor.

Positie motor AAN.

2. Druk op ⏻ om het apparaat aan te zetten.

INSTALLATIE

VOOR HET STARTEN

1. Dit apparaat is uitsluitend bedoeld voor gebruik in schepen met een 12/24V-voeding met negatieve massa.
2. Lees deze instructies aandachtig door.
3. Zorg ervoor dat de batterij **–** is losgekoppeld voordat u begint. Dit om kortsluiting tijdens de installatie te voorkomen. (Figuur 1)

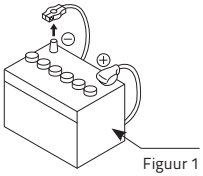

Figuur 1

INSTALLATIEVOORZORGSMAATREGELEN

1. Installeer het apparaat niet in de buurt van de motorruimte om interferentie te voorkomen.
2. Het gebruik van niet-geautoriseerde onderdelen kan permanente schade aan het apparaat veroorzaken.
3. Controleer altijd uw draadverbindingen om zeker te zijn van een juiste installatie voordat u het apparaat inschakelt.
4. Raadpleeg uw dichtstbijzijnde dealer voor de juiste installatie of als er andere accessoires nodig zijn om de installatie te voltooien.
5. Zoek hulp als er aanpassingen aan of het boren van gaten in uw vaartuig nodig zijn.
6. Installeer het apparaat niet op een plaats waar het wordt blootgesteld aan overmatig vocht, stof, vuil, vreemde deeltjes of trillingen. Gebieden met hoge temperatuur van de motor, direct zonlicht of warmtebronnen moeten ook worden vermeden.
7. Installeer het apparaat niet op een locatie waar het de werking van het vaartuig hindert of de passagiers verwondt bij een plotselinge of noodstop.

Informatie over afgedankte elektrische en elektronische apparatuur (voor Europese landen die de gescheiden inzameling van afval organiseren)
Producten die zijn gemarkeerd met een afvalcontainer met een X er doorheen, kunnen niet samen met gewoon huishoudelijk afval worden weggegooid. Deze elektrische en elektronische producten moeten worden gerecycled in de juiste faciliteiten die in staat zijn om de afvoer van deze producten en componenten te beheren. Als u wilt weten waar en hoe u deze producten naar de dichtstbijzijnde recycling / stortplaats kunt brengen, neemt u contact op met uw plaatselijke gemeente. Recycling en afvoeren van afval op een juiste manier draagt bij aan de bescherming van het milieu en het voorkomen van schadelijke effecten op de gezondheid.

FML035A_QSG_CAPRI H100_REV_A.indd 12 22/12/23 14:23

2 Contenuto dell'imballo / Packaging contents / Verpackungsinhalt / Contenido del embalaje / Conteúdo da embalagem / Contenu de l'emballage / パッケージ内容 / Obsah balení

CAPRI H100

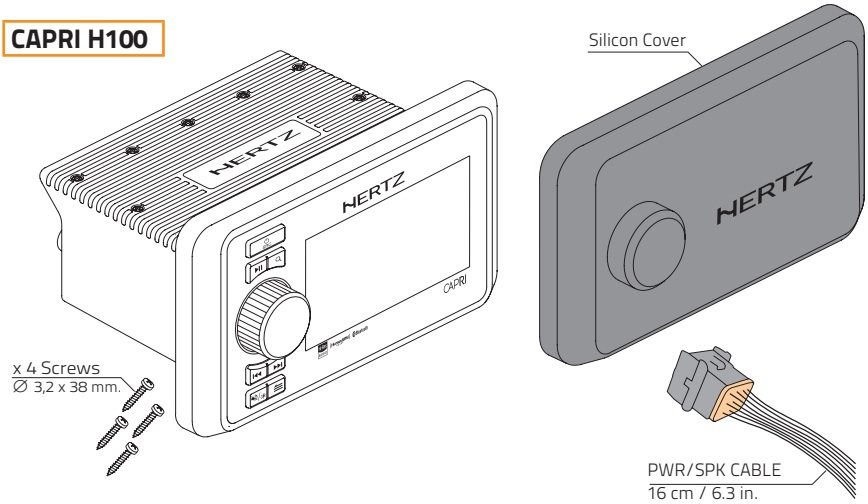

3 Dimensioni / Dimensions / Maße / Dimensiones / Dimensões / Dimensions / 寸法 / Dimensies

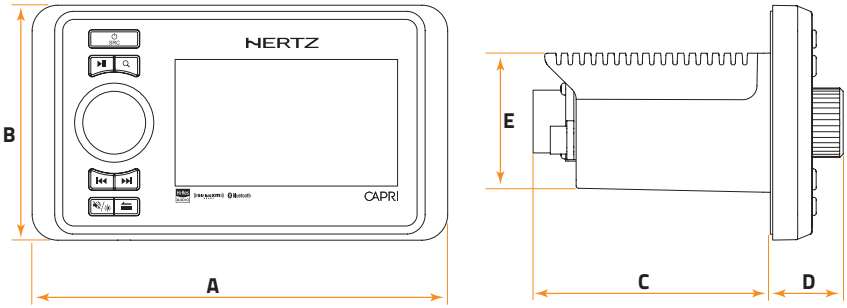

	A	B	C	D	E	
CAPRI H100	178.5	101	104	31	60	mm
	7.02	3.57	4.09	1.22	2.36	in.

FML035A_QSG_CAPRI H100_REV_A.indd 13 22/12/23 14:23

4 Montaggio / Mounting / Montage / Montaje / Montagem / Assemblée / 取り付け / Bijeenkomst

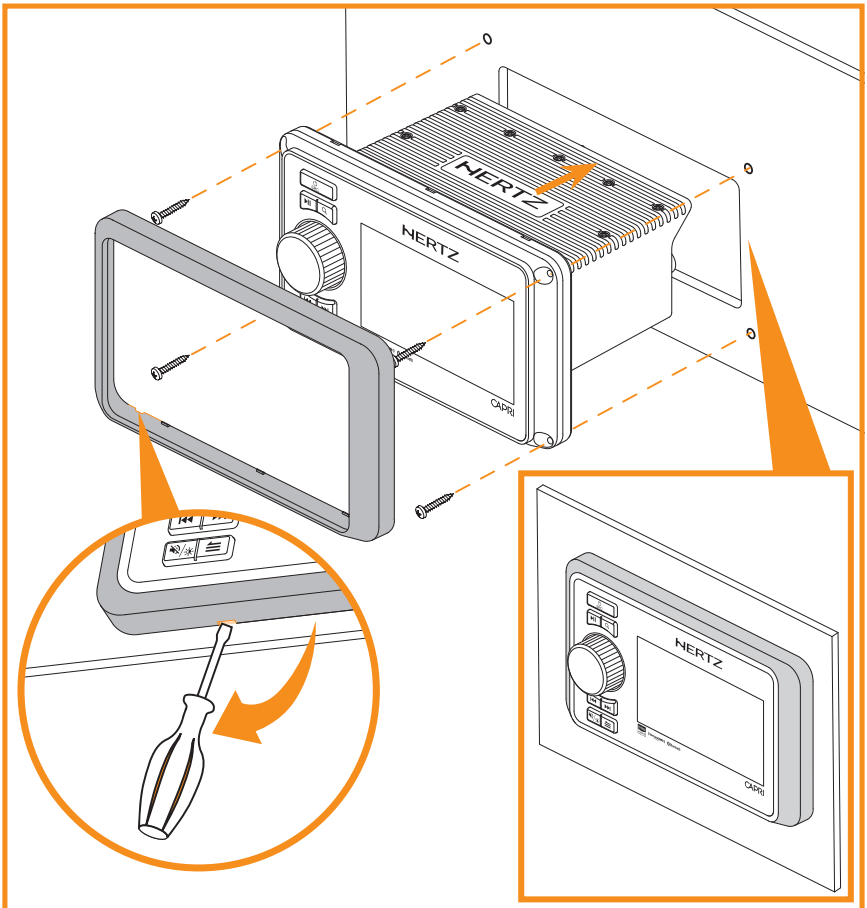

WARNING: before drilling or cutting, make sure there is adequate space behind the mounting surface to fit the CAPRI H100, including its wire harness.

FML035A_QSG_CAPRI H100_REV_A.indd 14 22/12/23 14:23

5 Connessioni / Connections / Verbindungen / Conexiones / Conexões / Connexions / 接続 / Verbindingen

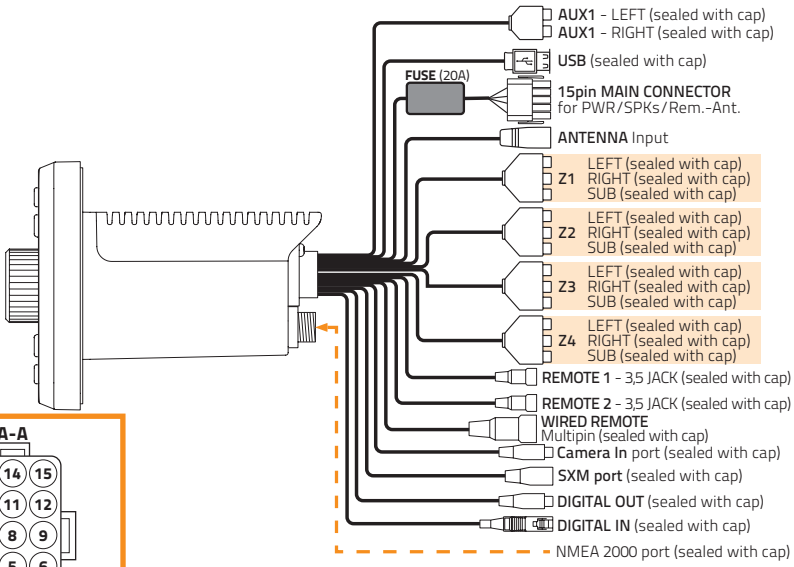

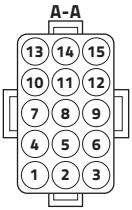

15 pin Harness pin out		
No.	**Wire color**	**Description**
1	Blue	Remote out (+12V)
2	Violet/white	Camera trigger
3	Orange/white	Dimmer trigger
4	Black	Ground
5	Purple/black	Rear right speaker -
6	Purple	Rear right speaker +
7	Blue/white	Antenna power / Remote out (+12V)
8	Grey/black	Front right speaker -
9	Grey	Front right speaker +
10	Yellow	+ Battery (+12V)
11	White/black	Front left speaker -
12	White	Front left speaker +
13	Red	ACC
14	Green/black	Rear left speaker -
15	Green	Rear left speaker +

Note: cable out view

15 PIN HARNESS

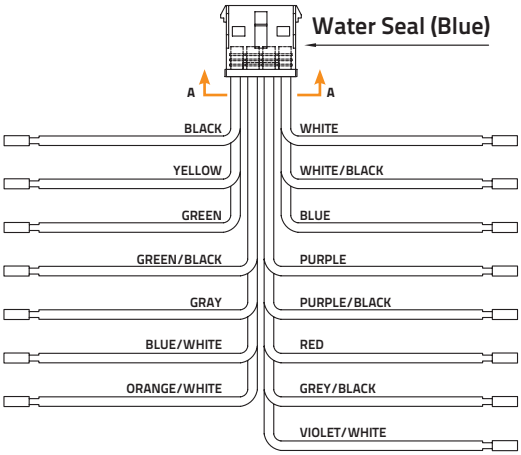

FML035A_QSG_CAPRI H100_REV_A.indd 15 22/12/23 14:23

6 Specifiche tecniche / Technical Specifications / Technische Spezifikationen / Especificaciones técnicas / Especificações técnicas / Spécifications techniques / 技術仕様 / Technické Údaje

FM TUNER

Frequency Range	USA	87.9 - 107.9 MHz
	Europe	87.5 - 108 MHz
	Japan	76 - 95 MHz
	Australasia	87.5 - 108 MHz

AM TUNER

Frequency Range	USA	530 - 1710 KHz
	Europe	526.5 - 1606.5KHz
	Japan	522 - 1620 KHz
	Australasia	522 - 1620 KHz

AUDIO OUTPUT

Maximum Power Output	70 W x 4 (@ 2Ω)
Speaker impedance	2Ω to 8Ω per channel
Line Max Output Level @ 0.02 % THD+N	Zone 1: 4Vrms x 3 (L/R/SUB) Zone 2: 4Vrms x 3 (L/R/SUB) Zone 3: 4Vrms x 3 (L/R/SUB) Zone 4: 4Vrms x 3 (L/R/SUB)
Digital Outpuut	S/PDIF optical (up to 24 bit/96 kHz)
Tone Controls	Zone 1/2/3: Balance Zone 4: Balance, Fader
EQ (8 bande)	Zone 1/2/3/4 (8 presets each zone)
Hi-Pass (L/R) crossover frequency	Zone 1/2/3/4: 60Hz,80Hz,100Hz,OFF
Lo-Pass (Sub) crossover frequency	Zone 1/2/3/4: 60Hz,80Hz,100Hz,OFF

USB

Interface		2.0 Full Speed / 2 A	
Supported Audio Format (USB)	Audio Format	Bit rate / (Bit count)	Sampling frequency
	MP3 (.mp3)	16 - 320kbps,VBR	16 - 48 kHz
	WMA (.wma)	16 - 320kbps	16 - 48 kHz
	AAC-LC (.m4a)	16 - 320kbps	16 - 48 kHz
	Linea PCM (WAVE) (.wav)	(16/24/32 bit)	8 - 384 kHz
	FLAC (,flac)	(16/24/32 bit)	8 - 384 kHz
	Vorbis (.ogg)	(16/24 bit)	8 - 192 kHz
Maximum MP3/WMA Songs		Max Folder: 256 Max File: 9999 Max files per folder: 9999	
USB Flash Drive		Max Capacity 256 GB	
Compatible Format		FAT/FAT32	
Apple® Compatibility		*iPhone 6 or following	

BLUETOOTH

Specification	Bluetooth Version 5.1 with Qualcomm® aptX™ HD, AAC, LDAC™
Connection Range	Up to 10m (30ft.)
Frequency Band	2402-2480MHz
Transmitted Power	Output Power(MAX)<10dBm

INPUTS

Camera inputs	Ingresso RCA CVBS (PAL/NTSC)
Aux IN	Stereo RCA (1 VRMS)
Digital IN	S/PDIF coaxial (up to 24 bit/96 kHz)

GENERAL

Power Supply Voltage	12 V DC (10 to 16 V allowable)
Grounding System	Negative Ground
Operating Temperature Range	-20°C to 50°C (32°F to 122°F)
IP Protection	IP67 IEC60529
Voltage Gauge	Yes
Over/Low Voltage	Alert
Over Temperature	Protection***
Display Type	4.3" COLOR TFT IPS (640 x 480 pixels)

SIZE / WEIGHT

Unit Dimensions mm / (in.) W x H x D	178.5 x 101 x 135 (7.02 x 3.97 x 5.31)
Mounting depth mm/(in.)	104 (4.09)
Mounting Hole size mm/(in.) W x H	151 x 63 (5.94 x 2.48)
Kg/(lb)	1.2 (2.64)

CEA SPECIFICATIONS

Amplifier Power Standard CEA CEA-2006 Compliant

Output power @ 4, ≤ 1% THD+N, 14.4 V:
26 W x 4 RMS

NOTE: Specifications and design are subject to change without notice for further improvement.

** **IP67 Water Resistance Rating:** This product has been tested to withstand immersion in water, up to 1 meter (3.28 ft.) deep, for up to 30 minutes (when properly installed). Note - while designed to be water resistant, this product should never be submerged under water for prolonged periods or subjected to activity that creates pressure on it that exceeds its depth rating.

* Apple®, AirPlay®, iPhone® and iPod touch® are trademarks of Apple Inc., registered in the US and other countries

***To avoid an excessive overheating, the unit will enter in Safe Mode and mute the audio output. A warning will also be displayed on-screen with instructions to turn the unit off. Until normal operating temperature is restored.

BLUETOOTH: The Bluetooth® word mark and logos are registered trademarks owned by Bluetooth SIG, Inc. and any use of such marks by Elettromedia srl is under license.

aptX™ HD: Qualcomm aptX is a product of Qualcomm Technologies, Inc. and/or its subsidiaries. Qualcomm is a trademark of Qualcomm Incorporated, registered in the United States and other countries. aptX is a trademark of Qualcomm Technologies International, Ltd., registered in the United States and other countries and any use of such marks by Elettromedia srl is under license

LDAC™: LDAC and LDAC logo are trademarks of Sony Corporation

All specifications subject to change without notice

FML035A_23REV.A

HERTZ
PART OF **ELETTROMEDIA**
Strada Regina Km 3,500 - Marignano
62018 Potenza Picena (MC) Italy
T +39 0733 870 870 - F +39 0733 870 880
www.elettromedia.it