Technology - Art - Sound
Manufactured by elettromedia

POWER FOR THE WAVES
PURE MARINE
CERTIFIED PRODUCT

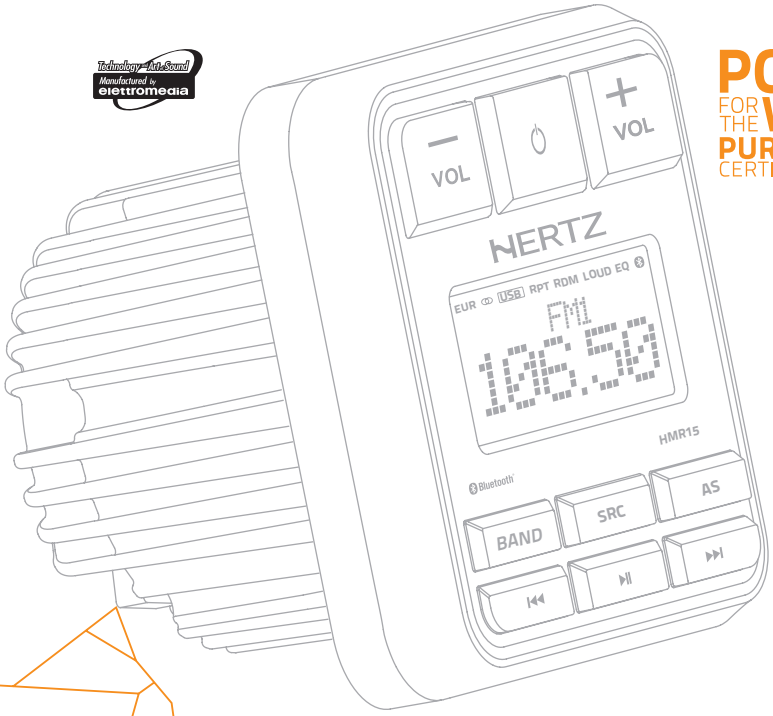

marine

HMR 15

OWNER'S MANUAL

Marine grade source units

Rev. 0.1

hertz-audio.com

HERTZ
The Sound Experience

1 INDEX

2. PRECAUTIONS 3
3. PACKAGING CONTENTS 4
4. DIMENSIONS 5
5. INSTALLATION 5
5.1 Installation Cautions 5
6. MOUNTING 6
7. CONNECTIONS 8
8. CONTROLS 9
8.1 Operational Panel 9
8.2 Name of Buttons and their Functions 9
9. OPERATIONS 10
9.1 Basic Operation 10
9.2 FM (RDS) Operation 11
9.3 USB Mode Operation 12
9.4 AUX In Mode Operation 13
9.5 Bluetooth Operation 13
10. TROUBLESHOOTING 14
10.1 General 14
10.2 USB 14
10.3 Bluetooth 14
11. TECHNICAL SPECIFICATIONS 15

FML022_HMR 15_Owner_Manual_artwork_Preliminary_rev.22A.indd 2 25/03/22 14:14

2 PRECAUTIONS

WARNING: for your safety, while boating,

keep the volume to a level at which external sounds can be heard.

1. This unit uses precision parts and components for its operation. In the event of any operating issues, never open the case or disassemble the unit. Contact your Hertz dealer or service center.
2. FCC STATEMENT
   2.1 This device complies with Part 15 of the FCC Rules. Operation is subject to the following two conditions:
   (1) This device may not cause harmful interference.
   (2) This device must accept any interference received, including interference that may cause undesired operation.
   2.2 Changes or modifications not expressly approved by the party responsible for compliance could void the user's authority to operate the equipment.

   FCC ID: 2ASUD-HMR15

NOTE: This equipment has been tested and found to comply with the limits for a Class B digital device, pursuant to Part 15 of the FCC Rules. These limits are designed to provide reasonable protection against harmful interference in a residential installation. This equipment generates, uses and can radiate radio frequency energy and, if not installed and used in accordance with the instructions, may cause harmful interference to radio communications. However, there is no guarantee that interference will not occur in a particular installation. If this equipment does cause harmful interference to radio or television reception, which can be determined by turning the equipment off and on, the user is encouraged to try to correct the interference by one or more of the following measures:
- Reorient or relocate the receiving antenna.
- Increase the separation between the equipment and receiver.
- Connect the equipment into an outlet on a circuit different from that to which the receiver is connected.
- Consult the dealer or an experienced radio/TV technician for help.

FCC Radiation Exposure Statement.
This equipment complied with FCC radiation exposure limits set forth for an uncontrolled environment. This equipment should be installed and operated with minimum distance 20 cm between the unit & your body.

3. The Bluetooth word mark and logos are registered trademarks owned by the Bluetooth SIG, Inc. and any use of such marks by Elettromedia srl is under license. Other trademarks and trade names belong to their respective owners.
4. IC warning
   This device complies with Industry Canada's license-exempt RSS standard(s).
   Operation is subject to the following two conditions:
   (1) This device may not cause interference
   (2) This device must accept any interference, including interference that may cause undesired operation of the device.

This Class B digital apparatus complies with Canadian ICES-0003.

Le présent appareil est conforme aux CNR d'Industrie Canada applicables aux appareils radio exempts de licence.
L'exploitation est autorisée aux deux conditions suivantes:
(1) l'appareil ne doit pas produire de brouillage
(2) l'utilisateur de l'appareil doit accepter tout brouillage radioélectrique subi, même si le brouillage est susceptible d'en compromettre le fonctionnement.

This equipment complies with IC radiation exposure limits set forth for an uncontrolled environment. The antenna should be installed and operated with minimum distance of 20 cm between the radiator and your body.
This transmitter must not be co-located or operating in conjunction with any other antenna or transmitter.

Cet appareil est conforme aux limites d'exposition aux rayonnements de la IC pour un environnement non contrôlé. L'antenne doit être installé de façon à garder une distance minimale de 20 centimètres entre la source de rayonnements et votre corps.
L'émetteur ne doit pas être colocalisé ni fonctionner conjointement avec à autre antenne ou autre émetteur.

WARNING: changes or modifications to this unit not expressly approved by the party responsible for compliance could void the user's authority to operate the equipment.

IC ID: 24882-HMR15

Cleaning the Body
- Use a soft, dry cloth and gently wipe off any dirt or dust.
- For persistent dirt, apply some neutral detergent diluted in water on a soft cloth, wipe off the dirt gently, then wipe again with a dry cloth.
- Do not use benzene, thinner, boat cleaner, etc., as these substances may damage the body or cause the paint to peel. Also, leaving rubber or plastic products in contact with the body for long periods of time may cause stains.

FML022_HMR 15_Owner_Manual_artwork_Preliminary_rev.22A.indd 3 25/03/22 14:14

USB Port

- The USB memory sticks must be recognized as "USB" to work properly. Some models may not operate correctly. **In the event data is lost or damaged under any condition, Elettromedia srl shall not be liable for any damage.** When using the USB memory stick, we recommend that you backup your data (music) to a personal computer before using.
- Data (music) files may be damaged when USB memory sticks are removed while the device is reading data, or by Static electricity and/or an electrical surge.
- Connect/disconnect the USB memory stick when it is not accessed.
- Disconnect the USB memory device when not in use.

CAUTIONS ON HANDLING

Protect from high temperatures. Exposure to direct sunlight for an extended period of time can produce very high temperature in your vessel. Cool down the interior before starting playback.

3 PACKAGING CONTENTS

HMR 15

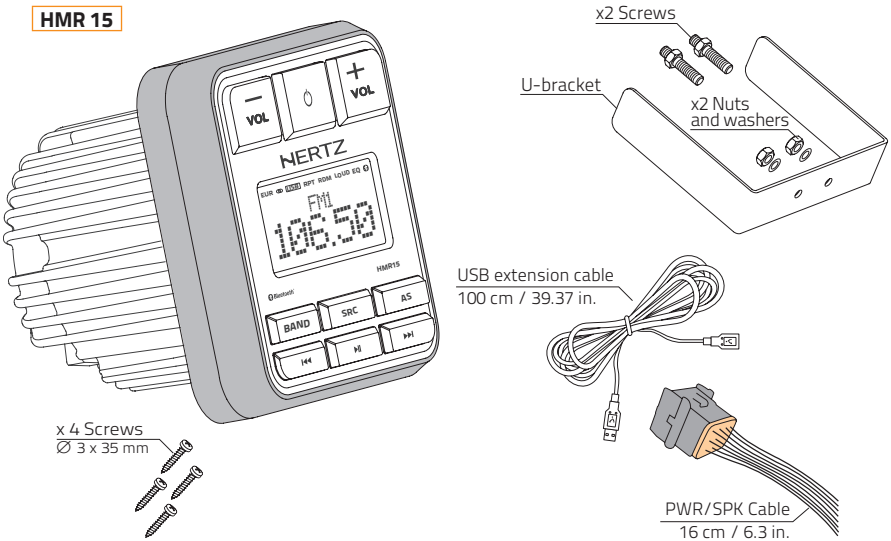

FML022_HMR 15_Owner_Manual_artwork_Preliminary_rev.22A.indd 4 25/03/22 14:14

4 DIMENSIONS

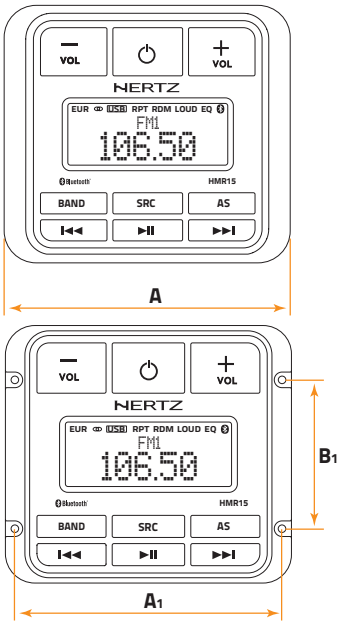

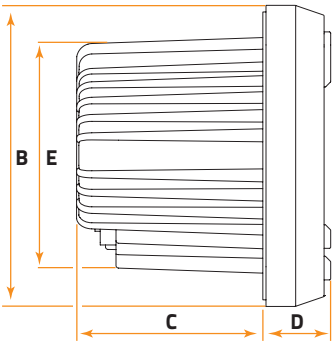

	A	A1	B	B1	C	D	E	
HMR 15	126	113	114	63	70,8	25,7	89,5	mm
	4.96	4.45	4.49	2.48	2.79	1.01	3.52	in.

5 INSTALLATION

5.1 Before Starting

1. This set is exclusively for use in vessels with a negative ground 12 V power supply.
2. Read these instructions carefully.
3. Make sure the battery "-" terminal is disconnected before starting. This is to prevent short circuits during installation. (Figure 1)

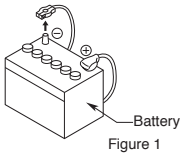

Figure 1

5.2 Installation Cautions

1. In order to avoid any interference, do not install the tuner module or control unit in the proximity of the engine compartment.
2. The use of unauthorized parts can cause permanent damage to the unit.
3. Always check your wire connections to ensure proper installation before turning on the unit.
4. Consult with your nearest dealer for proper installation or if other accessories are needed to complete the installation.
5. Seek assistance if modifications or drilling holes to your vessel is needed.
6. Do not install the unit where it will be subjected to excessive moisture, dust, dirt, foreign particles or vibration. Areas of high temperature from the engine, direct sunlight, or heat sources should also be avoided.
7. Do not install the unit in a location where it will interfere with the vessel operation, or it will injure the passengers if there is a sudden or emergency stop.

FML022_HMR 15_Owner_Manual_artwork_Preliminary_rev.22A.indd 5 25/03/22 14:14

6 MOUNTING

HMR 15

WARNING: before drilling or cutting, make sure there is adequate space behind the mounting surface to fit the HMR 15, including its wire harness

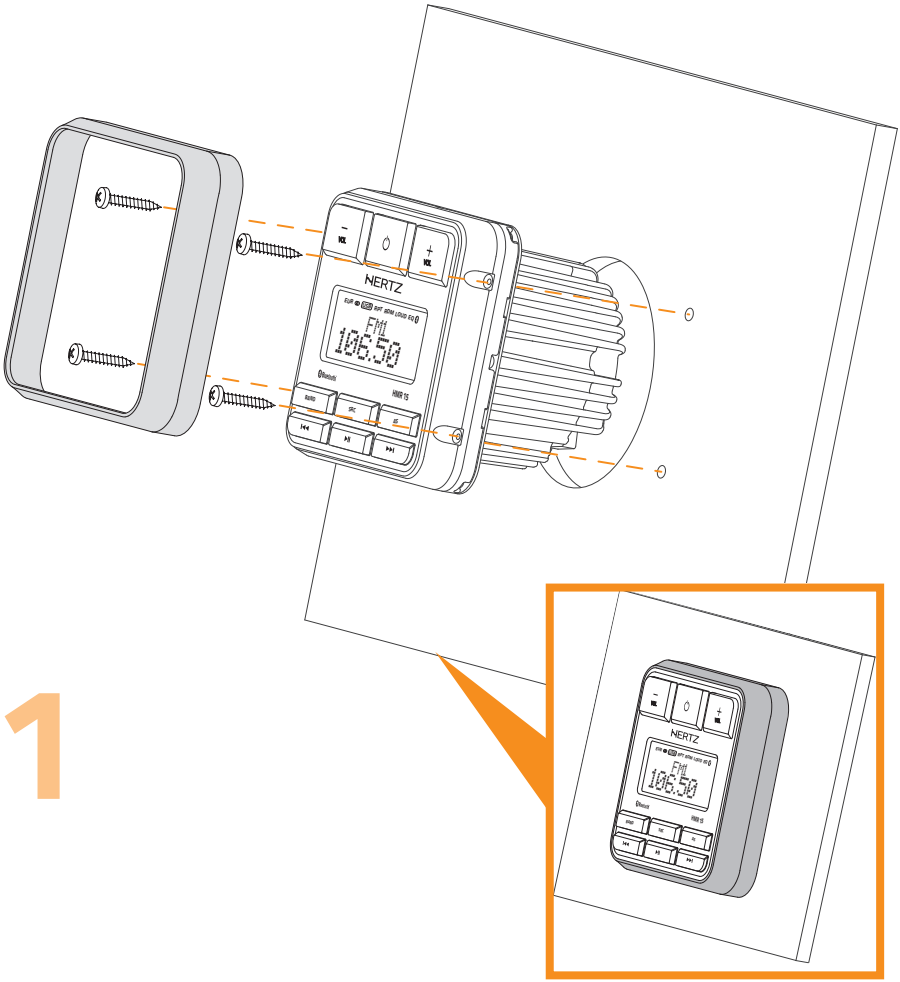

FML022_HMR 15_Owner_Manual_artwork_Preliminary_rev.22A.indd 6 25/03/22 14:14

HMR 15

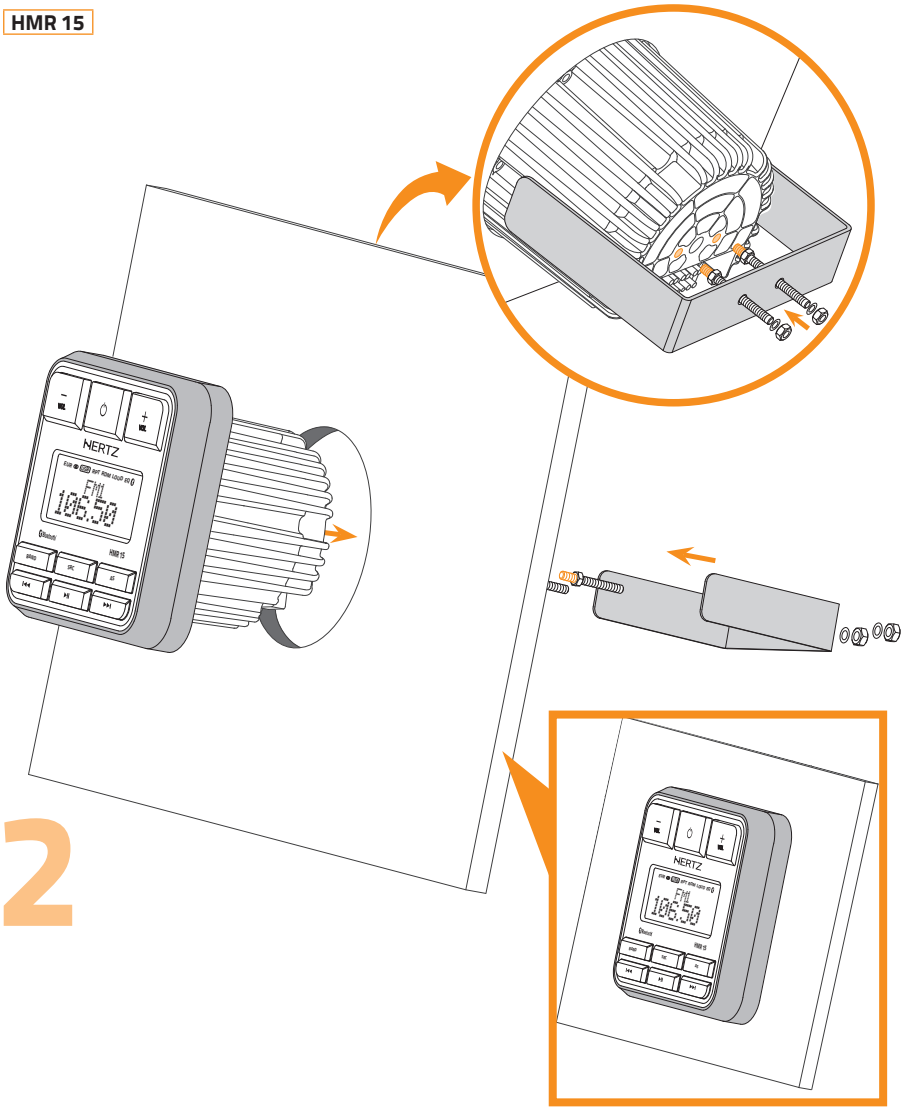

FML022_HMR 15_Owner_Manual_artwork_Preliminary_rev.22A.indd 7 25/03/22 14:14

7 CONNECTIONS

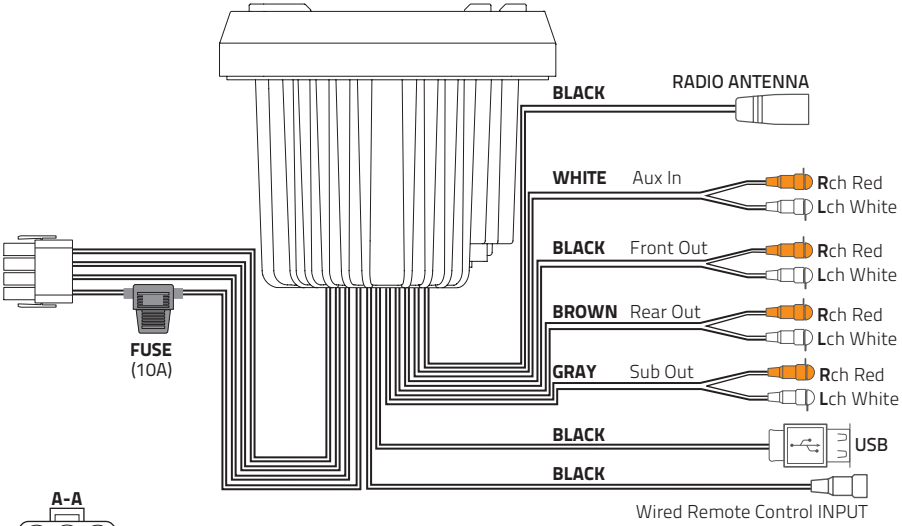

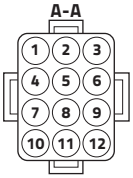

12 PIN HARNESS

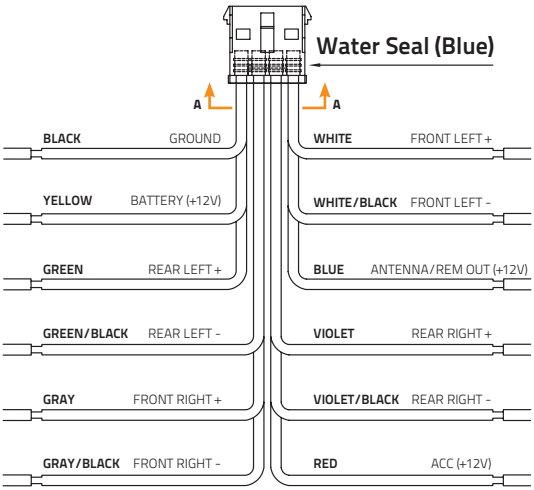

12 pin Harness pin out		
No.	**Wire color**	**Description**
1	Yellow	Battery (+12V)
2	White/black	Front left -
3	White	Front left +
4	Red	ACC (+12V)
5	Grey/black	Front right -
6	Grey	Front right +
7	Blue	Antenna/ Remote out (+12V)
8	Green/black	Rear left -
9	Green	Rear left +
10	Black	GND
11	Violet/black	Rear right -
12	Violet	Rear right +

Note: cable out view

FML022_HMR 15_Owner_Manual_artwork_Preliminary_rev.22A.indd 8 25/03/22 14:14

8 CONTROLS

8.1 Operational Panel

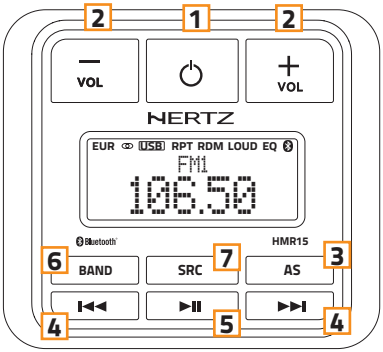

8.2 Name of Buttons and their Functions

1 ⏻ Button

- **Mute ON / OFF** (short press)
- **Power On** (short press)
- **Power OFF** (long press)

2 **VOL +/-** Button

- **Adjust volume level**

3 **AS** Button

- **AM/FM mode:** entering manual tuning (short press) the display shows "MANUAL". The System will revert to "AUTO" mode after a few seconds if no button is pressed
- **FM mode:** auto storing of the first 18 strongest stations (FM1, FM2, FM3). (Long press).
- **AM mode:** auto storing of the first 12 strongest stations (AM1, AM2). (Long press).
- **USB mode:** a long press enter USB music file browsing (please see "9.3 USB mode operation")

4 ⏮ / ⏭ Button

- **AM/FM mode:** previous/next preset station (short press).
- **AM/FM mode: SEEK** the next/previous strongest station (long press).
- **USB/BT mode:** previous/next track (short press).
- **USB/BT mode:** fast forward / rewind (press and hold).

5 ⏯ Button

- **AM/FM mode:** save a preset station (long press). (please see "9.2 Radio operation").
- **USB/BT mode:** PLAY or PAUSE playback (short press).

6 **BAND** Button

- **AM/FM mode:** change band.
- **USB mode:** change display info (Title, Artist, Album name, Track number and Playback time) (short press).

7 **SRC** Button

- **Toggle the audio source** (short press).
- **Enter into system MENU** (long press).
  - Then short press "SRC" to move to the next option.
  - Use the "VOL +/-" button to change the option value.

FML022_HMR 15_Owner_Manual_artwork_Preliminary_rev.22A.indd 9 25/03/22 14:14

9 OPERATIONS

9.1 Basic Operation

WARNING: when the unit is turned on, starting and stopping the engine with its volume raised to the maximum level may cause hearing damage. Make sure you adjust the volume in advance

Power On/Off

Note:

- Start the engine before using this unit.
- Be careful about using this unit for a long time without running the engine. If you drain the vessel battery, you may not be able to start the engine and this can reduce the service life of the battery.

1. Start the engine.

Engine ON position

2. Press the ⏻ button to turn on the power in standby mode. Press and hold to turn off the power.
3. Press the **SRC** button to toggle source among Tuner, USB, BT Music, Aux In.

Adjusting the volume

Press **VOL + / VOL-** button to increase or decrease the volume.
The adjustable range of volume is 0 to 40.

WARNING: while boating, keep the volume at a level at which external sounds can still be heard. Please be aware of the volume levels in residential, family areas and local volume level ordinances.

System menu

- Press and hold **SRC** to enter system menu.
- Press **SRC** to move to the next option.
- Use the **VOL +/-** button to change the option value / setting.

1 **Subwoofer Vol.:** Press **VOL +** or **VOL -** to adjust the desired Subwoofer volume level range from -13 + 7

2 **Subwoofer LP:** Press **VOL +** or **VOL -** to change Subwoofer Lo-Pass filter: **80 -> 120 -> 160 Hz**

3 **Dimmer:** Press **VOL +** or **VOL -** to select dimmer ON/OFF.

4 **Bass:** Press **VOL +** or **VOL -** to adjust the desired Bass level range from -7 to +7.

5 **Treble:** Press **VOL +** or **VOL -** to adjust the desired Treble level range from -7 to +7.

6 **Balance:** Press **VOL +** or **VOL -** to adjust the Balance between the right and left speakers from R10 (full right) to L10 (full left).

7 **Fader:** Press **VOL +** or **VOL -** to adjust the Fader between the front and rear speakers from R10 (full rear) to F10 (full front).

8 **Beep:** Press **VOL +** or **VOL -** to select beep on/off.

9 **EQ (Preset Equalizer Setting):** Press **VOL +** or **VOL -** to change EQ:
Hertz EQ -> Classic -> Pop.

10 **LOUD:** Press **VOL +** or **VOL -** to select loudness ON/OFF.

11 **Area:** Press **VOL +** or **VOL -** to select between USA, Europe.

12 **P-VOL:** Press **VOL +** or **VOL -** to select the desired volume level upon turn on.

FML022_HMR 15_Owner_Manual_artwork_Preliminary_rev.22A.indd 10 25/03/22 14:14

9.2 Radio Operation

Select Tuner as Playing Source
Press **SRC** button to select the Tuner mode.

Global Tuner
This unit is initially set to USA frequency intervals of 10KHz for AM and 100KHz for FM.
When using it outside the USA, the frequency reception range can be switched to the intervals below.

		USA Standard	**Europe** Standard
AM	Frequency spacing	10KHz	9KHz
	Frequency range	530 - 1710KHz	522 - 1620KHz
FM	Frequency spacing	100KHz	50KHz
	Frequency range	87.5 - 107.9MHz	87.5 - 108MHz

Select the Radio Band
Press **BAND** button to select one radio band from FM1, FM2, FM3, AM1, AM2.

Preset station selection
- short press **SEEK -** to move to the previous preset.
- short press **SEEK +** to move to the next preset.

SEEK Tuning
- long press **SEEK -** to SEEK the previous strongest station.
- long press **SEEK +** to SEEK the next strongest station.

Manual Tuning
short press **AS** button to enter manual tuning.
- the display shows **MANUAL** (the system reverts to **AUTO** mode after a few seconds if no button is pressed).
- press **SEEK -** or **SEEK +** to manual tune the desired frequency (the system reverts to **AUTO** mode after a few seconds if no button is pressed).

Auto Store
Only stations with sufficient signal strength will be detected and stored in the memory.
Press and hold the **AS** button to automatically find the first 18 strongest stations and store them into presets.
The new stations replace any stations already stored in the band.

Save a preset
Tune the desired station / frequency and then press and hold ▶II button, the preset number starts to blink.
Use the **SEEK** buttons to select desired preset number then long press ▶II button to save it.

FML022_HMR 15_Owner_Manual_artwork_Preliminary_rev.22A.indd 11 25/03/22 14:14

9.3 USB Mode Operation

Connect

1. Insert a USB device into the USB pigtail.
2. To remove the USB device, you should select another source or turn off the power, in order to avoid damaging the USB device. Then take off the USB device.

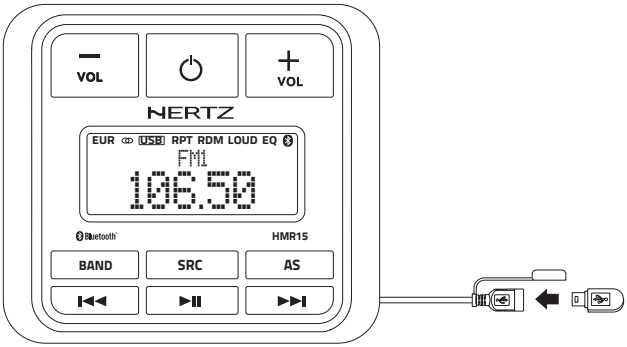

Select a Track

1. Press the ▶▶| button to move on to the next track/song. Press the |◀◀ button to go back to the previous track/song.
2. Press and hold the ▶▶| button to fast forward through the track/song. Press and hold the |◀◀ button to fast rewind through the track/song.

Play / Pause

Press the ▶|| button to pause the track/song that is currently playing.
Press the ▶|| button to resume playing the track/song that has been paused.

Repeat Feature

This function allows you to Repeat All tracks/songs, repeat the currently playing track/song or turn the Repeat feature OFF.

1. Press **AS** button once, it will display "REPEAT ONE". The "RPT" logo lights up.
2. Press **AS** twice, it will display "RANDOM". The "RDM" logo lights up.
3. Press **AS** button three times, it will display "REPEAT ALL". The "RPT" logo turns off.

Browsing

- Long press "**AS**" button to enter USB file browsing, playback stops, then use "SEEK" buttons to find the desired folder (folders are distinguished by the symbol ">" before the name) or track.
- Press "**AS**" button to enter the folder or to play the selected song.
- Press "**BAND**" button to exit the current folder.
- The system will revert to "Playback" mode after a few seconds if no button is pressed.
- The upper bar will display the current browsing level. Example:
  - "_-------" means that you are browsing the USB ROOT.
  - "-_------" means that you entered into a folder.
  - "--_-----" means that you entered into a folder contained into another folder.

Track Info

Short press **BAND** button to change the displayed info.

FML022_HMR 15_Owner_Manual_artwork_Preliminary_rev.22A.indd 12 25/03/22 14:14

9.4 AUX In Mode Operation

The AUX In RCA inputs in this system are provided to allow playback of sounds and music from external devices connected to this unit. Press the **SRC** button to select "AUX In".

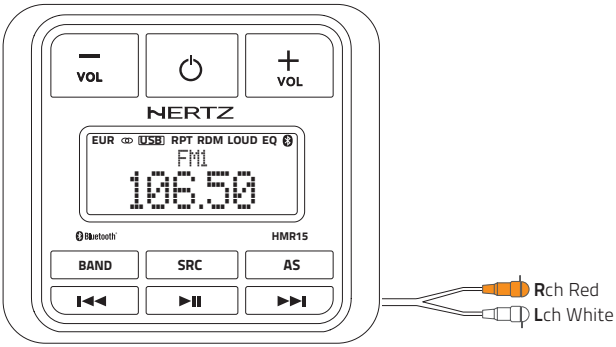

9.5 Bluetooth Operation

Pair the Bluetooth Device

1. From your Bluetooth enabled device, turn Bluetooth ON and search for Bluetooth device.
2. When a list of available Bluetooth devices appears on your Bluetooth device select HMR 10
3. "CONN. OK" will appear on the display.
4. The unit will automatically enter the BT Music source and you can now start streaming audio from your Bluetooth enabled device.

Note:
When the device is connected long pressing the **AS** button the device will be disconnected. Short press **AS** button to reconnect the same device (it may take up to 20 seconds).

WARNING: please avoid operating your connected mobile phone while audio streaming as this may cause noise or stuttering on the song playback. Audio streaming may or may not resume after telephone interruption as this depends on the mobile phone used.

Play / Pause

Press the ▶II button to pause the track/song that is currently playing.
Press the ▶II button to resume playing the track/song that has been paused.

Select a Track

1. Press the ▶▶I button to move on to the next track/song.
2. Press the I◀◀ button to go back to the previous track/song.

Note:
Playing order will depend on Bluetooth audio player. When the I◀◀ button is pressed some A2DP devices will restart the current track depending on the duration of the playback. Some Bluetooth audio players may not allow play / pause synchronization with this unit. Please make sure both the device and the main unit are in the same play / pause status in BT Music mode.

FML022_HMR 15_Owner_Manual_artwork_Preliminary_rev.22A.indd 13 25/03/22 14:14

10 TROUBLESHOOTING

10.1 General

Problem	Cause	Remedy
Unit cannot power on.	Unit fuse blown.	Replace with new fuse of correct value.
	Vessel battery fuse blown.	Replace with new fuse of correct value.
No/low audio output.	Incorrect audio output connection.	Check wiring and correct.
	Volume set too low.	Increase volume level.
	Speakers damaged.	Replace speakers.
	Heavily biased volume balance.	Adjust the channel balance to center position.
	Speaker wiring is in contact with metal part of vessel.	Insulate all speaker wiring connections.
Poor sound quality or distortion.	Speaker power rating does not match unit.	Replace speakers.
	Wrong connections.	Check wiring and correct.
	Speaker is shorted.	Check wiring and correct.
Unit resets itself when engine is off.	Incorrect connection between ACC and Battery.	Check wiring and correct.
Auto seek function can not find any stations.	The antenna cable is not connected.	Insert the antenna cable securely.
	The signals are too weak.	Select a station manually.

10.2 USB

Problem	Cause	Remedy
USB device cannot be inserted.	The USB device has been inserted incorrectly.	Reverse the connection direction of the USB device and try again.
	The USB connector is broken.	Replace with a new USB device.
USB device is not recognized.	The USB device is damaged.	Disconnect the USB device and reconnect. If the device is still not recognized, try replacing it with a different USB device.
	Connectors are loose.	
No sound heard with the display showing "No File".	MP3/WMA/WAV* file is stored in the USB device.	Store these files properly in the USB device.
Sound skips or is noisy.	MP3/WMA/WAV* files are not encoded properly.	Use properly encoded MP3/WMA/WAV* files.

*Only 16bit/44.1kHz

10.3 Bluetooth

Problem	Cause	Remedy
Cannot pair the Bluetooth enabled device with the audio system.	The device does not support the profiles required for the system.	The external BT device is not compatible.
	The Bluetooth function of the device is not enabled.	Refer to the user manual of the device for how to enable the function.
Audio quality is poor after connection with a Bluetooth enabled device.	The Bluetooth reception is poor.	Move the device closer to the audio system or remove any obstacle between the device and the system.

FML022_HMR 15_Owner_Manual_artwork_Preliminary_rev.22A.indd 14 25/03/22 14:14

11 TECHNICAL SPECIFICATIONS

FM TUNER		
Frequency Range	USA	87.9 - 107.9 MHz
	Europe	87.5 - 108.0 MHz
AM TUNER		
Frequency Range	USA	530 - 1710 KHz
	Europe	522 - 1620 KHz

AUDIO	
Maximum Power Output	50 W x 4 (@ 4 Ohm)
Max Output Level @ 0.1 % THD	6 x 4 V RMS (Front - Rear - Sub)
Controls	Treble, Bass, Balance, Fader, Loudness
Preset EQ	Hertz EQ, Classic, Pop
Subwoofer LowPass Filter	80, 120, 160Hz
AUX Input	Stereo RCA Plugs

USB	
USB	2.0 Full Speed
USB Port	1 A
USB Voltage	5.0 V
Supported Audio Format	MP3,WMA,WAV* (*16bit/44.1kHz only)
Maximum MP3/WMA Songs	Max Folder 6000 Max File 60000
USB Flash Drive	Max Capacity 32 Gb
Compatible Format	FAT/FAT32

BLUETOOTH	
Specification	Bluetooth Version 5.0
Supported Profiles	▪ A2DP (Advanced Audio Distribution Profile) ▪ AVRCP 1.5 (Audio/Video Remote control profile) ▪ SSP (Simple Secure Pairing)

GENERAL	
Power Supply Voltage	12 V DC (10,5 to 16 V allowable)
Grounding System	Negative Ground
Speaker impedance	4-8 ohms per channel
IP Protection	IP66
Over Voltage	Alarm
Over Temperature	Protection

NOTE: Specifications and design are subject to change without notice for further improvement

CEA SPECIFICATIONS	
Amplifier Power Standard CEA CEA-2006 Compliant	Output power @ 4Ω, ≤1% THD+N, 14.4 V: 22 W x 4 RMS

* To avoid an excessive overheating, the unit will enter in Safe Mode and mute the audio output

A warning will also be displayed on-screen with instructions to turn the unit off. Until normal operating temperature is restored.

FML022_HMR 15_Owner_Manual_artwork_Preliminary_rev.22A.indd 15 25/03/22 14:14

PART OF **ELETTROMEDIA**
Strada Regina Km 3,500 - Marignano
62018 Potenza Picena (MC) Italy
T +39 0733 870 870 - F +39 0733 870 880
www.elettromedia.it

All specifications subject to change without notice **FML022_REV.22A**