ShenZhen FeiMin Technology CO.,LTD.

Product specification

CUSTOMER: Shenzhen jiemeisi industry co., ltd

PRODUCTS: Built-in 2.4G/FM antenna

PART NO: 3.208.384

Spec.: FM-S803-SMT-1206 (D3)

Data: 2023.06.25

SUPPLIER		
PREPARED BY	CHECKED BY	APPROVED BY
FanMa	XingxiXia	DongdongMa

CUSTOMER		
ACCEPTED BY	CHECKED BY	APPROVED BY

REMARK:Please send us one(or copy)of this approval with stamp after accepting,other copies filed by the customer.

ADD:Room 303,Building C,Hengnan one Road,Gushu community,Xixiang Street,Bao' an District,Shenzhen City
Tel: 0755-23035723 Fax: 0755-23036702
E-mail: ant001@fmant.cn HTTP:www.fmant.cn

Frequency Range: 2.4G(2400-2500MHZ); FM: 88-108MHZ

1. Project Information

1.1. Appearance and Dimensions

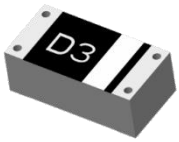

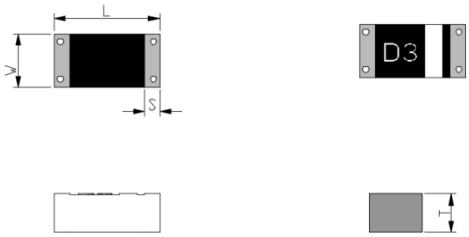

Symbol	Dimension (mm)
L	3.4±0.20
W	1.7±0.20
T	1.2±0.20
S	0.4±0.20

1.2. antenna Clearance area

When designing the antenna, it should be far away from metal components and irrelevant components such as batteries, oscillators, shields, cameras, etc. to leave a clean space for the antenna. This interval is called clearance area. The following is the size of clearance area we recommend to reserve.

Model	size	Clearance area **L*W(mm)**
A1（2.4G monopole）	5.5*1.2*1.2	9.1*5.6
X5（2.4G monopole）	5.2*2.2*1.0	8.7*6.5
X6（2.4G pifa）	3.2*1.6*1.0	7.0*6.0
D1（2.4G monopole ）	5.2*2.2*1.0	8.7*6.5
D2（2.4G monopole）	5.2*2.2*1.0	8.7*6.5
D3（2.4G monopole）	3.4*1.7*1.2	7.2*6.0
F01（2.4G pifa）	3.2*1.6*0.4	7.0*6.0
S2 （ 2.4/5.8Gdouble frequency）	7.0*3.0*2.0	9.0*7.0
U1 (UHF monopole）	15.0*3.0*1.0	19.0*8.0
G2（GPS monopole ）	9.5*3.0*1.0	13.5*7.5

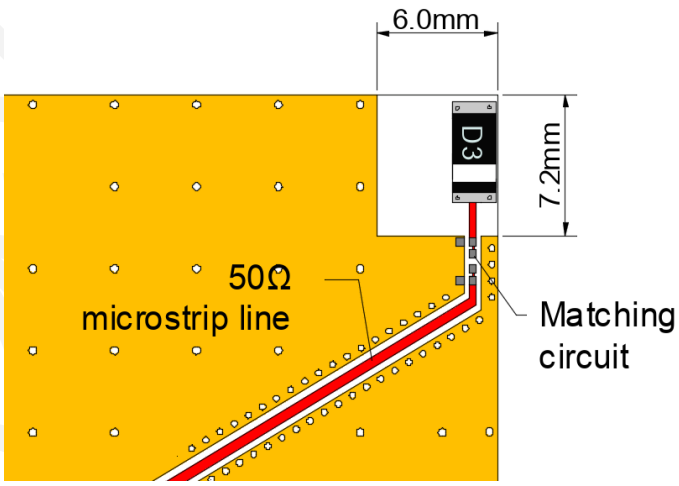

1.3 Demo Test Board with Antenna(Unit:mm)

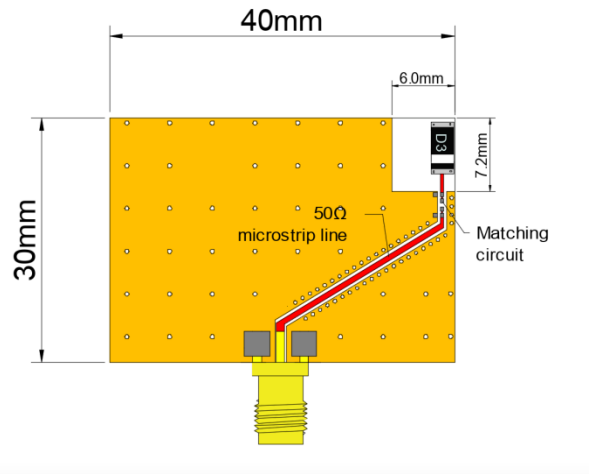

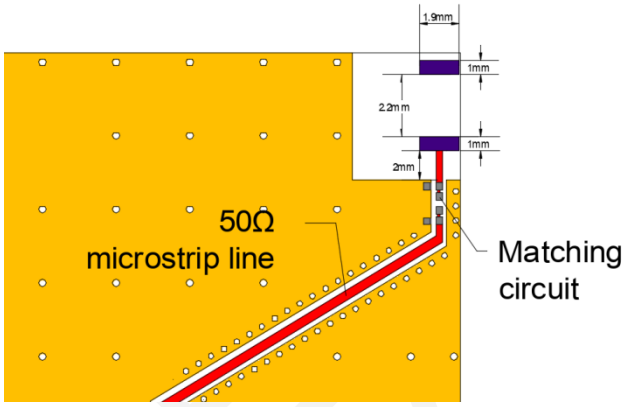

1.4. Matching Circuit

With the following recommended values of matching and tuning components,the center frequencies will be about 2440 MHz at our standard 30*40 mm evaluation board.However,these are typical reference values which may need to be changed when circuit boards or part vendors are diffierent.

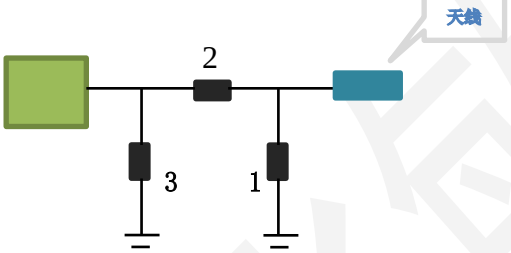

System Matching Circuit Component（Murata）		
Location	Desciption	Tolerance
1	NC	/
2	4.7nH(0402)	±0.2nH
3	1.0pF (0402)	±0.1pF

2. Electrical Characteristics(30*40mm ground plane)

2.1.Electrical Table

Characteristics		Specifications	Unit
Outline Dimensions		3.4*1.7*1.2	mm
Working Frequency		2400-2500	MHz
VSWR		<2	/
Impedance		50	Ω
Polarization		Linear polarization	/
Gain	Peak	3	dBi
	Efficiency	50	%

2.2. VSWR & return loss

VSWR

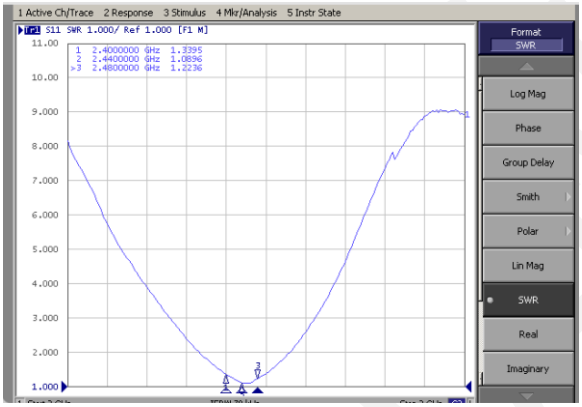

return loss

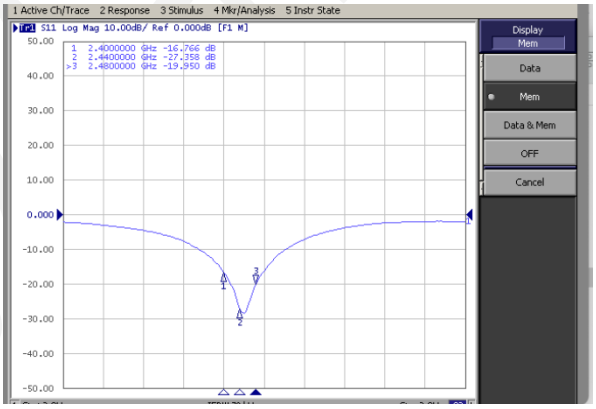

2.3 Gain and Efficiency

Test system

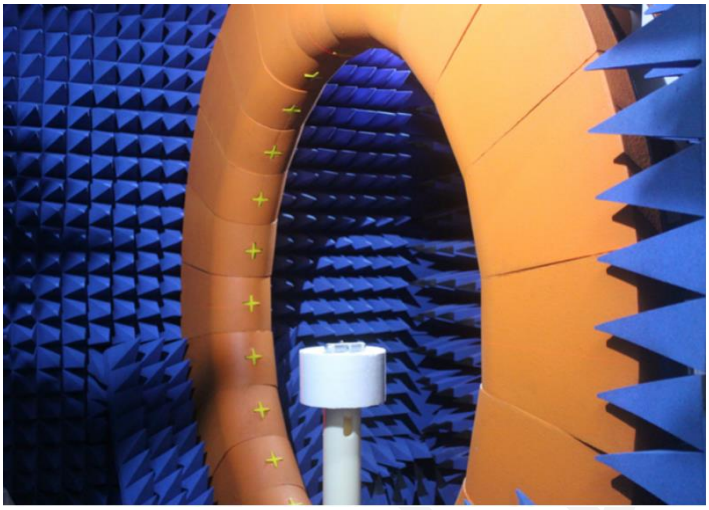

Shenzhen Feimin Technology Co., Ltd. (24-probe OTA microwave darkroom)

Frequency (MHz)	Gain (dBi)	Efficiency (%)
2400 MHz	2. 53	48. 07
2410 MHz	2. 42	46. 87
2420 MHz	2. 62	45. 74
2430 MHz	2. 60	47. 41
2440 MHz	2. 83	49. 21
2450 MHz	3. 04	49. 87
2460 MHz	3. 37	50. 91
2470 MHz	3. 51	51. 95
2480 MHz	3. 54	52. 81
2490 MHz	3. 39	51. 34
2500 MHz	3. 31	49. 99

2.4. Antenna radiation pattern

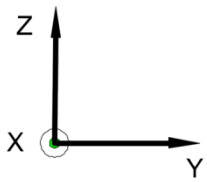

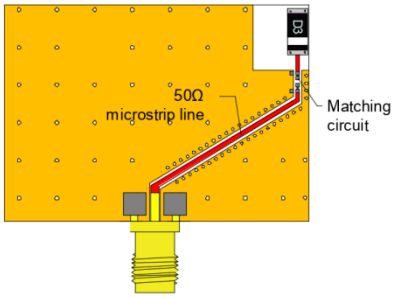

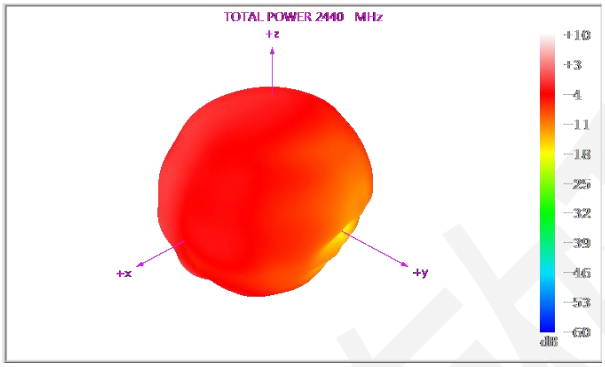

3D-plane@2.44GHz

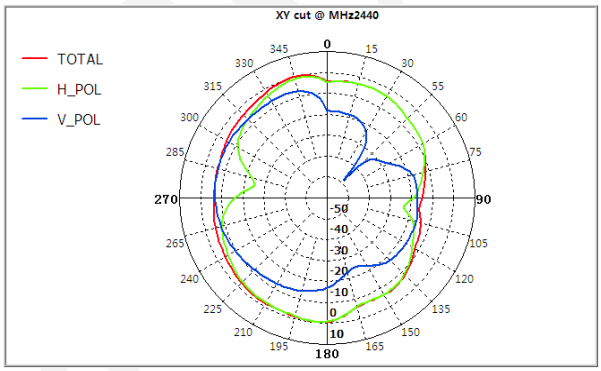

2D-plane XOY @2.44GHz

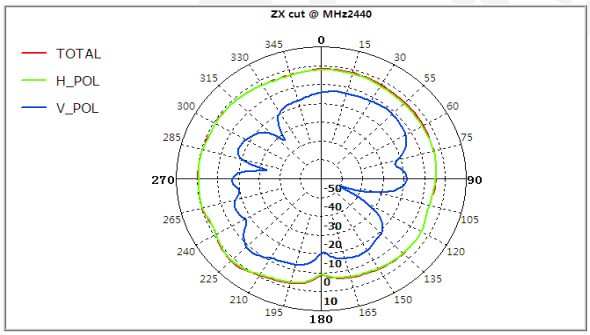

2D-plane XOZ@2.44GHz

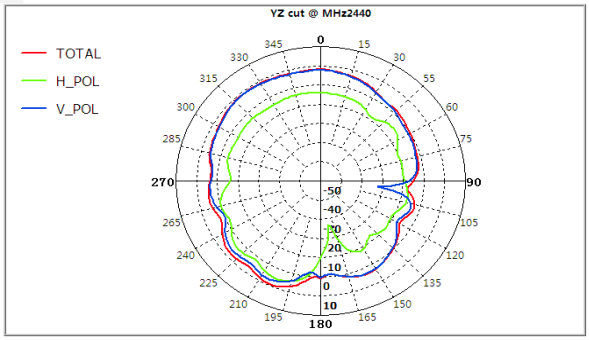

2D-plane YOZ @2.44GHz

3.Packaging Information

3.1. Tape specification

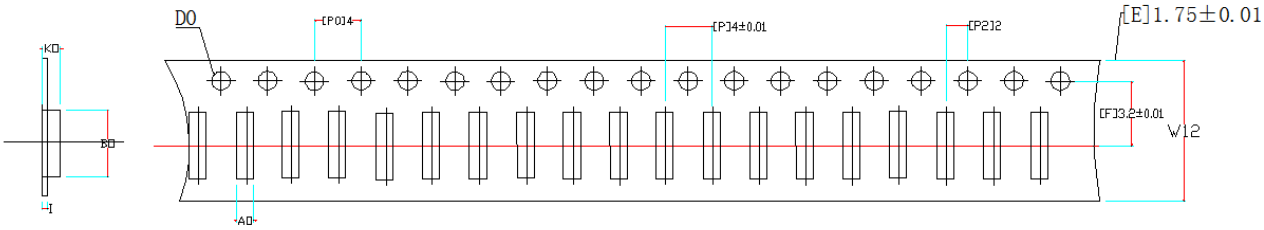

Index	A0	B0	K0	P0	P	P2	ϕ D0	W	E	F	T
Dimension(mm)	2.0± 0.1	3.7± 0.1	1.5± 0.1	4.0± 0.1	4.0± 0. 1	2.0± 0.1	1.5 +0.1	12.0 ±0.3	1.75 ±0.1	3.7± 0.1	0.3± 0.05

1. 10 sprocket hole pitch cumulative tolerance ±0.20.
2. Carrier camber is within 1 mm in 250 mm.
3. All dimensions meet EIA-481-C requirements.
4. Material :Transparent PS.
5. Packing length per 7" reel :12.5Meters.
6. Component load per 7" reel : 3000 pcs.(120pcs are reserved before and after.)

3.2.Reel specification

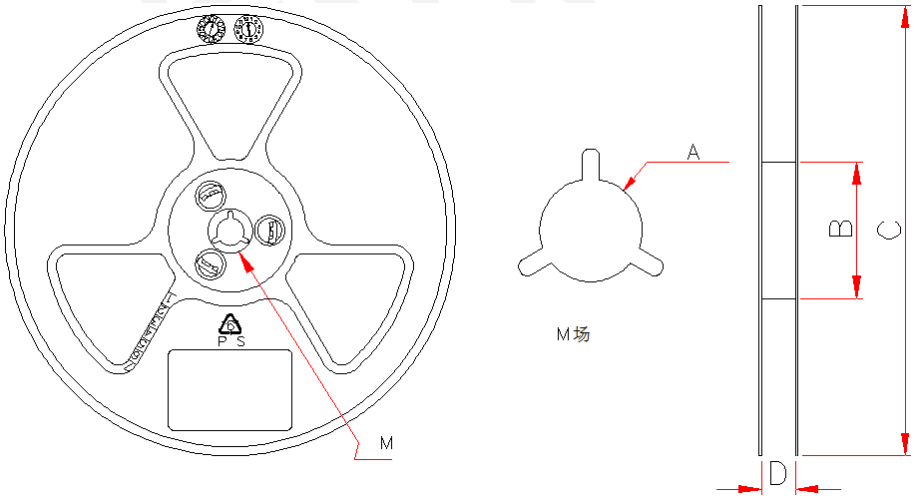

Index	A	B	C	D
Dimension(mm)	13. 3±0. 3	100±0. 3	330±0. 3	24. 5±0. 3

4. Notes

1)

Products should be handled with care to avoid damage or contamination from perspiration and skin oils.

2)

The use of tweezers or vacuum pick up is strongly recommended for individual components.

5. Storage Conditions

1)

Recommended products should be used within 6 months form the time of delivery.

2)

Storage environment condition

- Temperature and humidity conditions:-10~40℃ and 30~70%RH.
- 。
  The packaging material should be kept where no chlorine or sulfur exists in the air.
- Products should be storage in thewarehouse without heat shock,vibration,direct sunlight and so on.