Microtest
微 测 检 测

Test Report

Report No.:	MTi210723005-04E1
Date of issue:	Oct. 29, 2021
Applicant:	Shenzhen Leaderment Technology Co., Ltd.
Product name:	Magnetic Wireless Car Charger
Model(s):	UBWL379
FCC ID:	2ASUP-UBWL379

Shenzhen Microtest Co., Ltd.
http://www.mtitest.com

Address: 101, No. 7, Zone 2, Xinxing Industrial Park, Fuhai Avenue, Xinhe Community, Fuhai Street, Bao' an District, Shenzhen, Guangdong, China.
Tel: (86-755)88850135 Fax: (86-755) 88850136 Web:www.mtitest.com E-mail: mti@51mti.com

Instructions

1. The report shall not be partially reproduced without the written consent of the laboratory;
2. The test results of this report are only responsible for the samples submitted;
3. This report is invalid without the seal and signature of the laboratory;
4. This report is invalid if transferred, altered or tampered with in any form without authorization;
5. Any objection to this report shall be submitted to the laboratory within 15 days from the date of receipt of the report.

Table of Contents

1 GENERAL INFORMATION 5

1.1 FEATURE OF EQUIPMENT UNDER TEST (EUT) 5
1.2 TEST MODE 5
1.3 EUT TEST SETUP 5
1.4 ANCILLARY EQUIPMENT 5

2 SUMMARY OF TEST RESULT 6

2.1 OPERATION CHANNEL LIST 6
2.2 TEST CHANNEL 6

3 TEST FACILITIES AND ACCREDITATIONS 7

3.1 TEST LABORATORY 7
3.2 ENVIRONMENTAL CONDITIONS 7
3.3 MEASUREMENT UNCERTAINTY 7

4 LIST OF TEST EQUIPMENT 8

5 TEST RESULTS 9

5.1 ANTENNA REQUIREMENT 9
5.1.1 Standard requirement 9
5.1.2 EUT Antenna 9
5.2 CONDUCTED EMISSION 10
5.2.1 Limits 10
5.2.2 Test Procedures 10
5.2.3 Test Setup 10
5.2.4 Test Result 10
5.3 RADIATED EMISSION 15
5.3.1 Limits 15
5.3.2 Test Procedures 16
5.3.3 Test Setup 17
5.3.4 Test Result 17
5.4 OCCUPIED BANDWIDTH 21
5.4.1 Test method 21
5.4.2 Test result 21

PHOTOGRAPHS OF THE TEST SETUP 22

PHOTOGRAPHS OF THE EUT 24

TEST RESULT CERTIFICATION	
Applicant's name:	Shenzhen Leaderment Technology Co., Ltd.
Address:	1st Floor, Building 24, Longcheng Industrial Zone Gaofeng Community, Dalang Street, Longhua District 518109 Shenzhen.
Manufacturer's Name:	Shenzhen Leaderment Technology Co., Ltd.
Address:	1st Floor, Building 24, Longcheng Industrial Zone Gaofeng Community, Dalang Street, Longhua District 518109 Shenzhen.
Factory's Name :	Shenzhen Whakin Innovation Technology Co., Ltd.
Address:	4/F, L Bldg, Jingtie Technology Industrial Park, No. 49 Changjiangpu Rd., HeAo Community, Longgang district, Shenzhen 518116, China
Product description	
Product name	Magnetic Wireless Car Charger
Trademark	UNBREAKcable
Model Name	UBWL379
Serial Model	N/A
Standards	FCC Part 15C
Test procedure.....	ANSI C63.10-2013
Date of Test	
Date (s) of performance of tests.....:	July 27, 2021 ~ Aug. 10, 2021
Test Result.....:	Pass
This device described above has been tested by Shenzhen Microtest Co., Ltd. and the test results show that the equipment under test (EUT) is in compliance with the FCC requirements. And it is applicable only to the tested sample identified in the report.	

Testing Engineer : Yanice Xie

(Yanice Xie)

Technical Manager : Leon chen

(Leon Chen)

Authorized Signatory : Tom Xue

(Tom Xue)

1 GENERAL INFORMATION

1.1 Feature of equipment under test (EUT)

Product name:	Magnetic Wireless Car Charger
Model name:	UBWL379
Model difference:	N/A
Operation frequency:	115–205 kHz
Modulation type:	ASK
Max output power:	15W
Antenna type:	Coil Antenna
Power supply:	DC 12V from adapter AC 120V/60Hz
Input:	DC: 5V/3A, 9V/2A, 12V/1.5A
Battery:	N/A
Adapter information:	N/A
EUT serial number:	MTi210723005-04-S0001

1.2 Test mode

To investigate the maximum EMI emission characteristics generates from EUT, the test system was pre-scanning tested base on the consideration of following EUT operation mode or test configuration mode which possible have effect on EMI emission level. Each of these EUT operation mode(s) or test configuration mode(s) mentioned above was evaluated respectively.

Test mode	Description
Mode 1	Wireless charging

Note:

1: The test modes were carried out for all operation modes. The final test mode of the EUT was the worst test mode for EMI, and its test data was showed.

2: EUT is tested under full load.

1.3 EUT test setup

See photographs of the test setup in the report for the actual setup and connections between EUT and support equipment.

1.4 Ancillary equipment

Equipment	Model	S/N	Manufacturer
Adapter	HW-090200CH0	/	Huizhou BYD Electronics Co., Ltd.
Load	YBZ1.1	/	YBZ

2 Summary of Test Result

Item	FCC Part No.	Description of Test	Result
1	FCC PART 15.203	Antenna requirement	Pass
2	FCC PART 15.207	Conducted emission	Pass
3	FCC PART 15.209	Radiated emission	Pass
4	FCC Part 15.215	20dB bandwidth	Pass

2.1 Operation channel list

Channel	Frequency (kHz)
Low	115
Middle	117
High	205

2.2 Test channel

Channel	Frequency (kHz)
Middle	117

3 Test Facilities and Accreditations

3.1 Test laboratory

Test Laboratory	Shenzhen Microtest Co., Ltd
Location	101, No. 7, Zone 2, Xinxing Industrial Park, Fuhai Avenue, Xinhe Community, Fuhai Street, Bao' an District, Shenzhen, Guangdong, China.
FCC Registration No.:	448573

3.2 Environmental conditions

Temperature:	15ºC~35ºC
Humidity	20%~75%
Atmospheric pressure	98kPa~101kPa

3.3 Measurement uncertainty

Measurement	Uncertainty
Conducted emission (150 kHz~30 MHz)	± 2.5 dB
Radiated emission (9 kHz~30 MHz)	± 4.0 dB
Radiated emission (30 MHz~1 GHz)	± 4.2 dB
Radiated emission (above 1 GHz)	± 4.3 dB
Occupied Bandwidth	± 3 %
Temperature	±1 degree
Humidity	± 5 %

This uncertainty represents an expanded uncertainty expressed at approximately the 95% confidence level using a coverage factor of k=2.

4 List of test equipment

Equipment No.	Equipment Name	Manufacturer	Model	Serial No.	Calibration date	Due date
MTI-E043	EMI Test Receiver	Rohde&schwarz	ESCI7	101166	2021/06/02	2022/06/01
MTI-E044	TRILOG Broadband Antenna	schwarabeck	VULB 9163	9163-1338	2021/05/30	2023/05/29
MTI-E047	Amplifier	Hewlett-Packard	8447F	3113A06150	2021/06/02	2022/06/01
MTI-E089	ESG Vector Signal Generator	Agilent	N5182A	MY49060455	2021/06/02	2022/06/01
MTI-E058	ESG Series Analog Ssignal Generator	Agilent	E4421B	GB40051240	2021/06/02	2022/06/01
MTI-E062	PXA Signal Analyzer	Agilent	N9030A	MY51350296	2021/06/02	2022/06/01
MTI-E066	MXA Signal Analyzer	Agilent	N9020A	MY50143483	2021/06/02	2022/06/01
MTI-E078	Synthesized Sweeper	Agilent	83752A	3610A01957	2021/06/02	2022/06/01
MTI-E079	DC Power Supply	Agilent	E3632A	MY40027695	2021/06/02	2022/06/01
MTI-E021	EMI Test Receiver	Rohde&schwarz	ESCS30	100210	2021/06/02	2022/06/01
MTI-E022	Pulse Limiter	Schwarzbeck	VSTD 9561-F	00679	2021/06/02	2022/06/01
MTI-E023	Artificial mains network	Schwarzbeck	NSLK 8127	NSLK 8127 #841	2021/06/02	2022/06/01
MTI-E046	Active Loop Antenna	Schwarzbeck	FMZB 1519 B	00044	2021/05/30	2023/05/29
MTI-E048	Amplifier	Agilent	8449B	3008A02400	2021/06/02	2022/06/01
MTI-E072	Thermometer Clock Humidity Monitor	-	HTC-1	/	2021/06/02	2022/06/01
MTI-E090	Test Loop Antenna	DATETEK	LA-001	771409634	2021/06/02	2022/06/01

Note: the calibration interval of the above test instruments is 12 or 24 months and the calibrations are traceable to international system unit (SI).

5 Test Results

5.1 Antenna requirement

5.1.1 Standard requirement

15.203 requirement: For intentional device, according to 15.203: an intentional radiator shall be designed to ensure that no antenna other than that furnished by the responsible party shall be used with the device

5.1.2 EUT Antenna

The EUT antenna is Coil Antenna. It comply with the standard requirement. In case of replacement of broken antenna the same antenna type must be used.

5.2 Conducted emission

5.2.1 Limits

For the following equipment, when designed to be connected to the public utility (AC) power line the radio frequency voltage that is conducted back onto the AC power line on any frequency or frequencies shall not exceed the limits in the following tables. Compliance with the provisions of this paragraph shall be based on the measurement of the radio frequency voltage between each power line and ground at the power terminal using a 50 μH/50 ohms line impedance stabilization network (LISN).

Frequency (MHz)	Conducted limit (dBμV)	
	Quasi-peak	Average
0.15 -0.5	66 - 56 *	56 - 46 *
0.5 -5	56	46
5 -30	60	50

Note:
the limit of " * " marked band means the limitation decreases linearly with the logarithm of the frequency in the range.

5.2.2 Test Procedures

The EUT was placed 0.8 meters from the horizontal ground plane with EUT being connected to the power mains through a line impedance stabilization network (LISN). All other support equipment powered from additional LISN(s). The LISN provide 50 Ohm/ 50uH of coupling impedance for the measuring instrument.

Interconnecting cables that hang closer than 40 cm to the ground plane shall be folded back and forth in the center forming a bundle 30 to 40 cm long.

I/O cables that are not connected to a peripheral shall be bundled in the center. The end of the cable may be terminated, if required, using the correct terminating impedance. The overall length shall not exceed 1 m.

LISN is at least 80 cm from nearest part of EUT chassis.

For the actual test configuration, please refer to the related Item – photographs of the test setup.

5.2.3 Test Setup

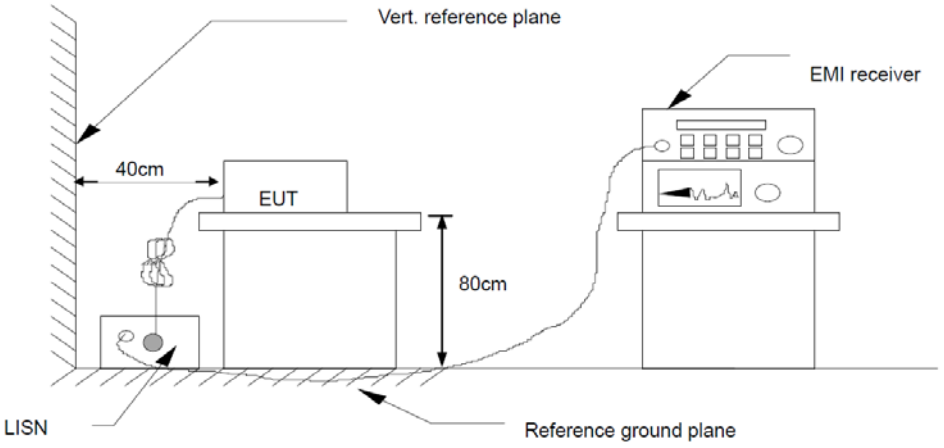

5.2.4 Test Result

EUT:	Magnetic Wireless Car Charger	Model Name:	UBWL379
Pressure:	101kPa	Phase:	L
Test voltage:	DC 12V from adapter AC 120V/60Hz	Test mode:	Mode 1

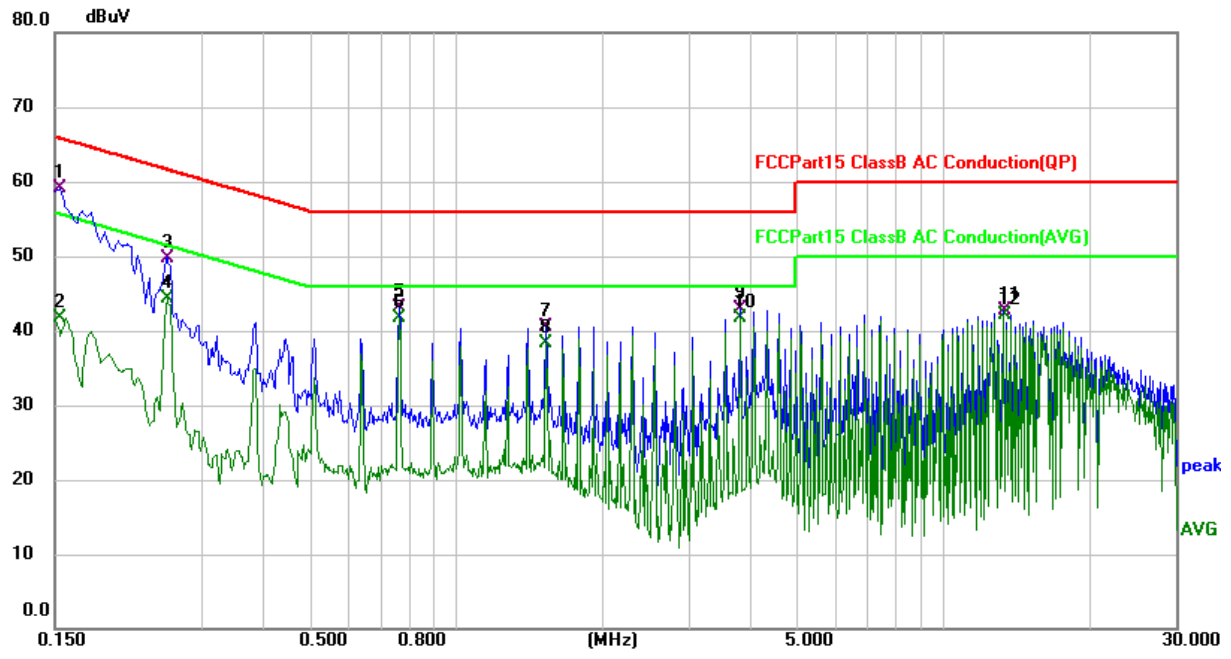

No.	Frequency (MHz)	Reading (dBuV)	Factor (dB)	Level (dBuV)	Limit (dBuV)	Margin (dB)	Detector
1	0.1539	48.03	10.99	59.02	65.79	-6.77	QP
2	0.1539	30.73	10.99	41.72	55.79	-14.07	AVG
3	0.2540	38.80	11.00	49.80	61.63	-11.83	QP
4	0.2540	33.32	11.00	44.32	51.63	-7.31	AVG
5	0.7660	31.93	11.14	43.07	56.00	-12.93	QP
6 *	0.7660	30.62	11.14	41.76	46.00	-4.24	AVG
7	1.5339	26.07	14.40	40.47	56.00	-15.53	QP
8	1.5339	23.87	14.40	38.27	46.00	-7.73	AVG
9	3.8340	31.57	11.42	42.99	56.00	-13.01	QP
10	3.8340	30.34	11.42	41.76	46.00	-4.24	AVG
11	13.2860	31.05	11.66	42.71	60.00	-17.29	QP
12	13.2860	30.35	11.66	42.01	50.00	-7.99	AVG

EUT:	Magnetic Wireless Car Charger	Model Name:	UBWL379
Pressure:	101kPa	Phase:	N
Test voltage:	DC 12V from adapter AC 120V/60Hz	Test mode:	Mode 1

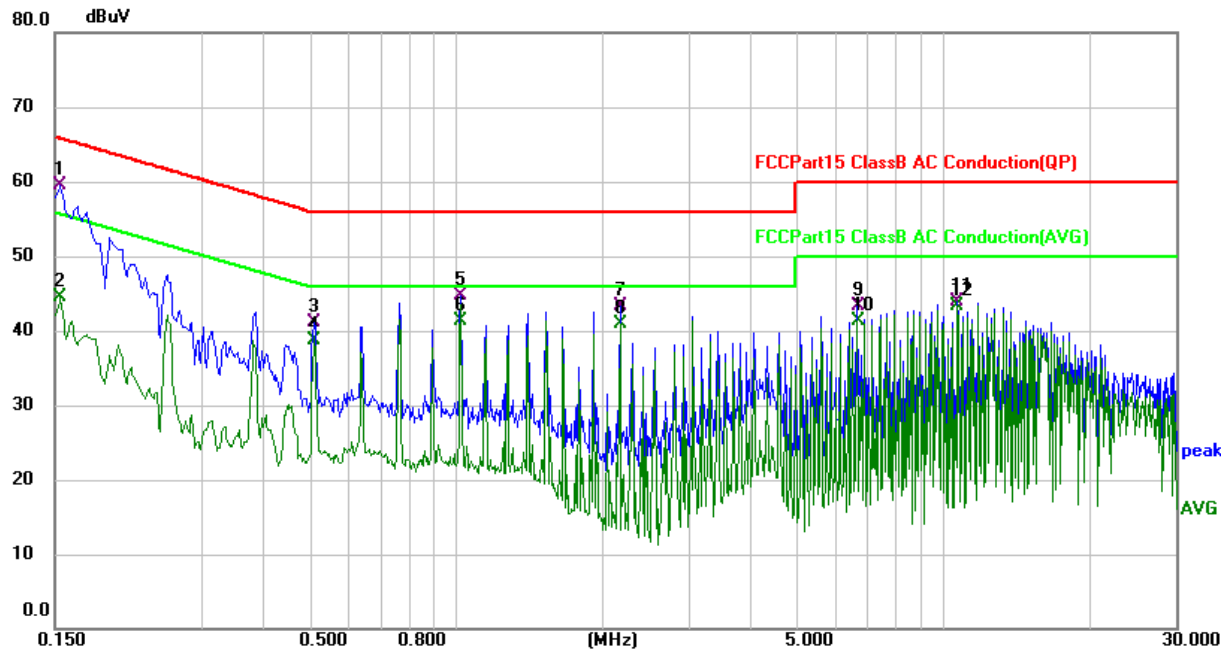

No.	Frequency (MHz)	Reading (dBuV)	Factor (dB)	Level (dBuV)	Limit (dBuV)	Margin (dB)	Detector
1	0.1539	48.60	10.94	59.54	65.79	-6.25	QP
2	0.1539	33.63	10.94	44.57	55.79	-11.22	AVG
3	0.5100	30.23	10.92	41.15	56.00	-14.85	QP
4	0.5100	27.87	10.92	38.79	46.00	-7.21	AVG
5	1.0220	31.53	13.25	44.78	56.00	-11.22	QP
6 *	1.0220	28.15	13.25	41.40	46.00	-4.60	AVG
7	2.1740	27.65	15.73	43.38	56.00	-12.62	QP
8	2.1740	25.17	15.73	40.90	46.00	-5.10	AVG
9	6.6420	31.91	11.41	43.32	60.00	-16.68	QP
10	6.6420	29.87	11.41	41.28	50.00	-8.72	AVG
11	10.7299	32.40	11.55	43.95	60.00	-16.05	QP
12	10.7299	31.81	11.55	43.36	50.00	-6.64	AVG

EUT:	Magnetic Wireless Car Charger	Model Name:	UBWL379
Pressure:	101kPa	Phase:	L
Test voltage:	DC 12V from adapter AC 240V/60Hz	Test mode:	Mode 1

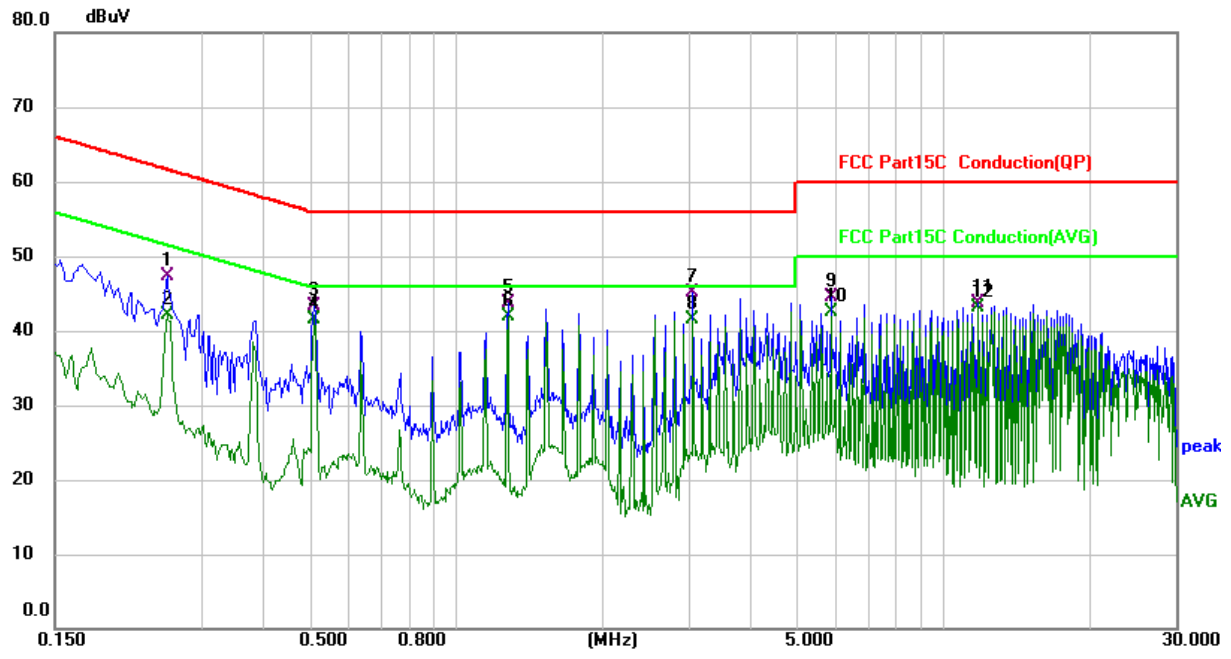

No.	Frequency (MHz)	Reading (dBuV)	Factor (dB)	Level (dBuV)	Limit (dBuV)	Margin (dB)	Detector
1	0.2540	36.27	11.00	47.27	61.63	-14.36	QP
2	0.2540	31.14	11.00	42.14	51.63	-9.49	AVG
3	0.5100	32.20	11.07	43.27	56.00	-12.73	QP
4	0.5100	30.36	11.07	41.43	46.00	-4.57	AVG
5	1.2780	29.79	13.88	43.67	56.00	-12.33	QP
6 *	1.2780	28.10	13.88	41.98	46.00	-4.02	AVG
7	3.0659	33.80	11.39	45.19	56.00	-10.81	QP
8	3.0659	30.18	11.39	41.57	46.00	-4.43	AVG
9	5.8778	32.87	11.55	44.42	60.00	-15.58	QP
10	5.8778	30.90	11.55	42.45	50.00	-7.55	AVG
11	11.7538	32.17	11.63	43.80	60.00	-16.20	QP
12	11.7538	31.42	11.63	43.05	50.00	-6.95	AVG

EUT:	Magnetic Wireless Car Charger	Model Name:	UBWL379
Pressure:	101kPa	Phase:	N
Test voltage:	DC 12V from adapter AC 240V/60Hz	Test mode:	Mode 1

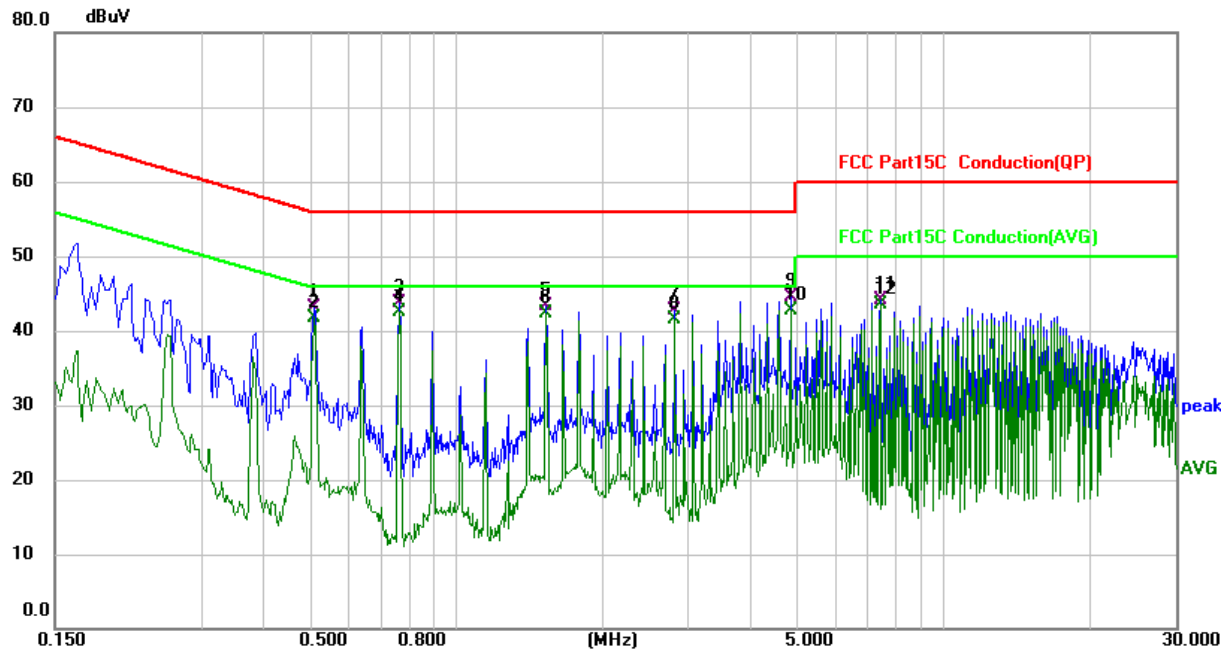

No.	Frequency (MHz)	Reading (dBuV)	Factor (dB)	Level (dBuV)	Limit (dBuV)	Margin (dB)	Detector
1	0.5100	32.20	10.92	43.12	56.00	-12.88	QP
2	0.5100	30.74	10.92	41.66	46.00	-4.34	AVG
3	0.7660	32.54	11.10	43.64	56.00	-12.36	QP
4	0.7660	31.38	11.10	42.48	46.00	-3.52	AVG
5	1.5339	29.01	14.36	43.37	56.00	-12.63	QP
6	1.5339	28.04	14.36	42.40	46.00	-3.60	AVG
7	2.8100	31.31	11.39	42.70	56.00	-13.30	QP
8	2.8100	30.15	11.39	41.54	46.00	-4.46	AVG
9	4.8539	33.12	11.40	44.52	56.00	-11.48	QP
10 *	4.8539	31.28	11.40	42.68	46.00	-3.32	AVG
11	7.4100	32.59	11.43	44.02	60.00	-15.98	QP
12	7.4100	32.02	11.43	43.45	50.00	-6.55	AVG

5.3 Radiated emission

5.3.1 Limits

In case the emission fall within the restricted band specified on 15.205(a), then the 15.209(a) limit in the table below has to be followed.

Frequencies (MHz)	Field Strength (micorvolts/meter)	Measurement Distance (meters)
0.009~0.490	2400/F(KHz)	300
0.490~1.705	24000/F(KHz)	30
1.705~30.0	30	30
30~88	100	3
88~216	150	3
216~960	200	3
Above 960	500	3

LIMITS OF RADIATED EMISSION MEASUREMENT (Above 1000MHz)

FREQUENCY (MHz)	Class B (dBuV/m) (at 3M)	
	PEAK	AVERAGE
Above 1000	74	54

Notes:

The limit for radiated test was performed according to FCC PART 15C.
The tighter limit applies at the band edges.
Emission level (dBuV/m)=20log Emission level (uV/m).

FREQUENCY RANGE OF RADIATED MEASUREMENT (For unintentional radiators)

Highest frequency generated or Upper frequency of measurement used in the device or on which the device operates or tunes (MHz)	Range (MHz)
Below 1.705	30
1.705 – 108	1000
108 – 500	2000
500 – 1000	5000
Above 1000	5th harmonic of the highest frequency or 40 GHz, whichever is lower

Spectrum Parameter	Setting
Attenuation	Auto
Start Frequency	1000 MHz
Stop Frequency	10th carrier harmonic
RB / VB (emission in restricted band)	1 MHz / 1 MHz for Peak, 1 MHz / 10Hz for Average

Receiver Parameter	Setting
Attenuation	Auto
Start ~ Stop Frequency	9kHz~150kHz / RB 200Hz for QP
Start ~ Stop Frequency	150kHz~30MHz / RB 9kHz for QP
Start ~ Stop Frequency	30MHz~1000MHz / RB 120kHz for QP

5.3.2 Test Procedures

a. The measuring distance of at 3 m shall be used for measurements at frequency up to 25GHz. For frequencies above 1GHz, any suitable measuring distance may be used.

b. The EUT was placed on the top of a rotating table 0.8 meters above the ground at a 3 meter semi-chamber test. The table was rotated 360 degrees to determine the position of the highest radiation.

c. The height of the equipment or of the substitution antenna shall be 0.8m; above 1GHz, the height was 1.5m, the height of the test antenna shall vary between 1 m to 4 m. Both horizontal and vertical polarizations of the antenna are set to make the measurement.

d. The initial step in collecting conducted emission data is a spectrum analyzer peak detector mode pre-scanning the measurement frequency range. Significant peaks are then marked and then Quasi Peak detector mode re-measured.

e. If the Peak Mode measured value compliance with and lower than Quasi Peak Mode Limit, the EUT shall be deemed to meet QP Limits and then no additional QP Mode measurement performed.

f. For the actual test configuration, please refer to the related Item –EUT Test Photos.

g. For the radiated emission test above 1GHz:
Place the measurement antenna away from each area of the EUT determined to be a source of emissions at the specified measurement distance, while keeping the measurement antenna aimed at the source of emissions at each frequency of significant emissions, with polarization oriented for maximum response.

h. The measurement antenna may have to be higher or lower than the EUT, depending on the radiation pattern of the emission and staying aimed at the emission source for receiving the maximum signal. The final measurement antenna elevation shall be that which maximizes the emissions. The measurement antenna elevation for maximum emissions shall be restricted to a range of heights of from 1 m to 4 m above the ground or reference ground plane.

Note: Both horizontal and vertical antenna polarities were tested and performed pretest to three orthogonal axis. The worst case emissions were reported.

5.3.3 Test Setup

Radiated Emission Test-Up Frequency Below 30MHz

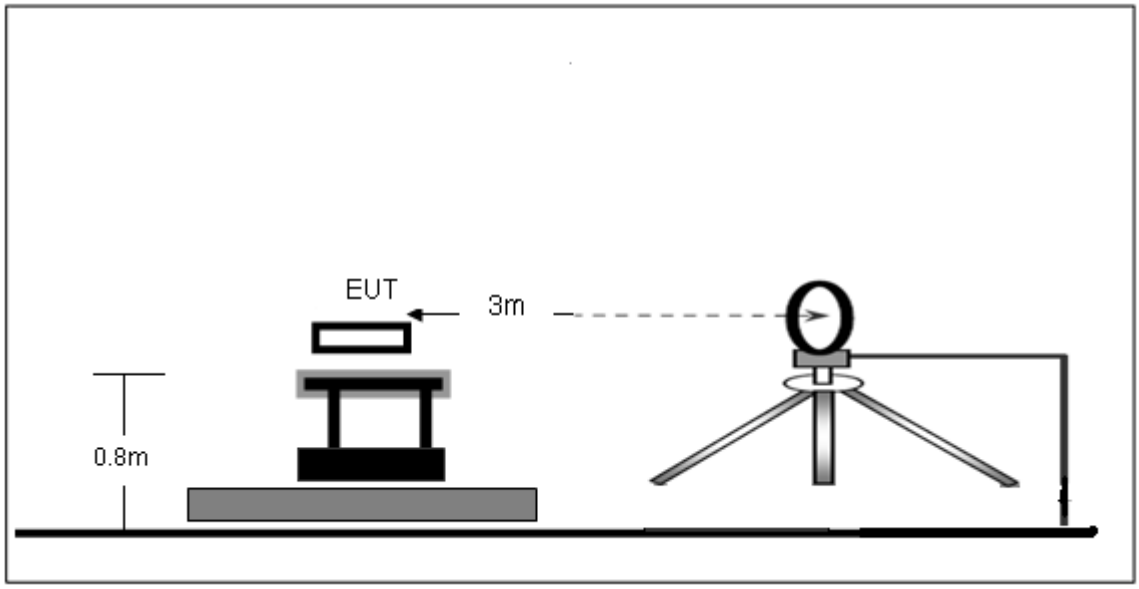

Radiated Emission Test-Up Frequency 30MHz~1GHz

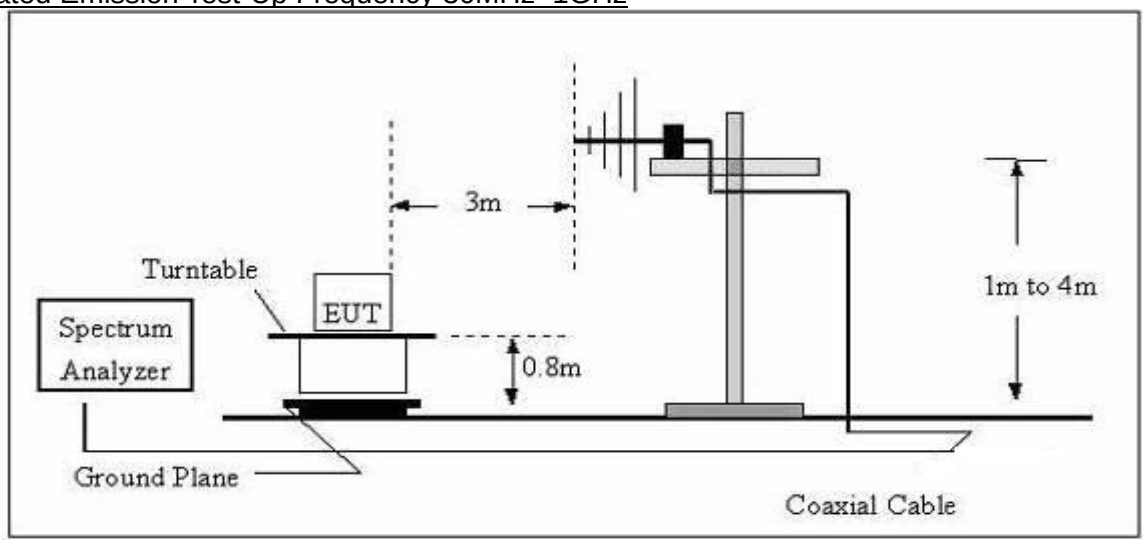

5.3.4 Test Result

Frequency range (9kHz – 30MHz)

EUT:	Magnetic Wireless Car Charger	Model Name:	UBWL379
Pressure:	101kPa	Test mode:	Mode 1
Test voltage:	DC 12V from adapter AC 120V/60Hz		

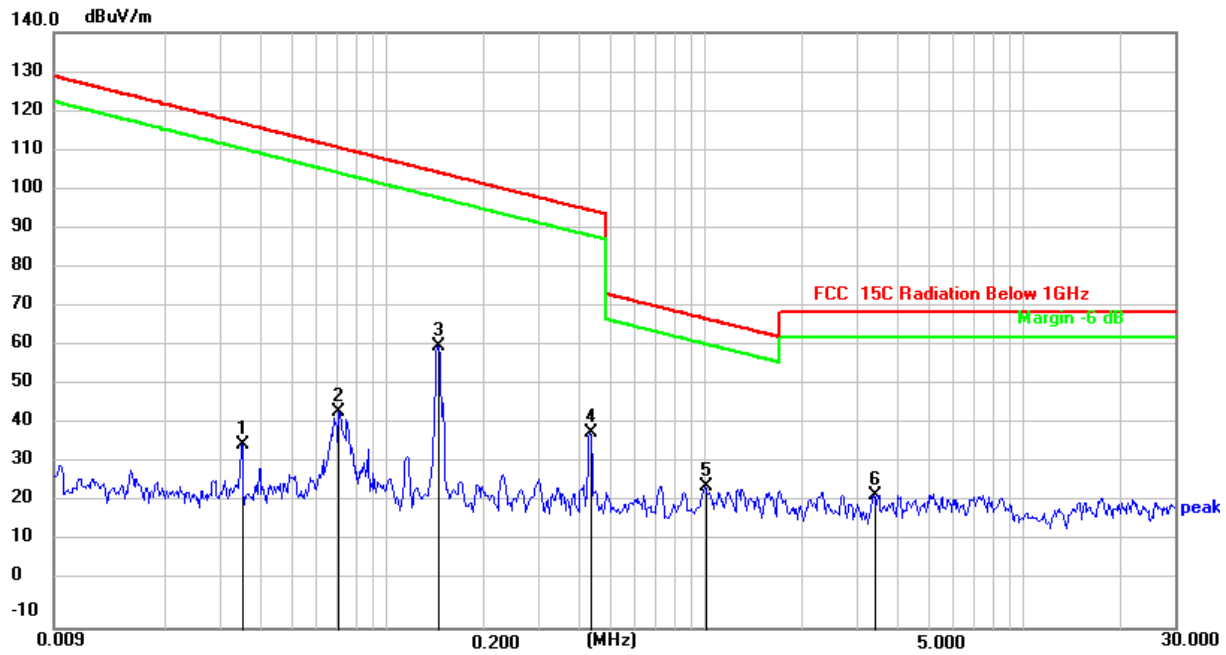

No.	Frequency (MHz)	Reading (dBuV)	Factor (dB/m)	Level (dBuV/m)	Limit (dBuV/m)	Margin (dB)	Detector
1	0.0349	14.18	22.18	36.36	116.75	-80.39	QP
2	0.0706	22.51	22.21	44.72	110.63	-65.91	QP
3	0.1454	39.33	21.84	61.17	104.35	-43.18	QP
4	0.4347	17.49	21.73	39.22	94.84	-55.62	QP
5 *	1.0024	3.49	22.43	25.92	67.60	-41.68	QP
6	3.3843	1.80	21.87	23.67	69.50	-45.83	QP

–

Frequency range (30MHz – 1GHz)

EUT:	Magnetic Wireless Car Charger	Model Name:	UBWL379
Pressure:	101kPa	Polarization:	Vertical
Test voltage:	DC 12V from adapter AC 120V/60Hz	Test mode:	Mode 1

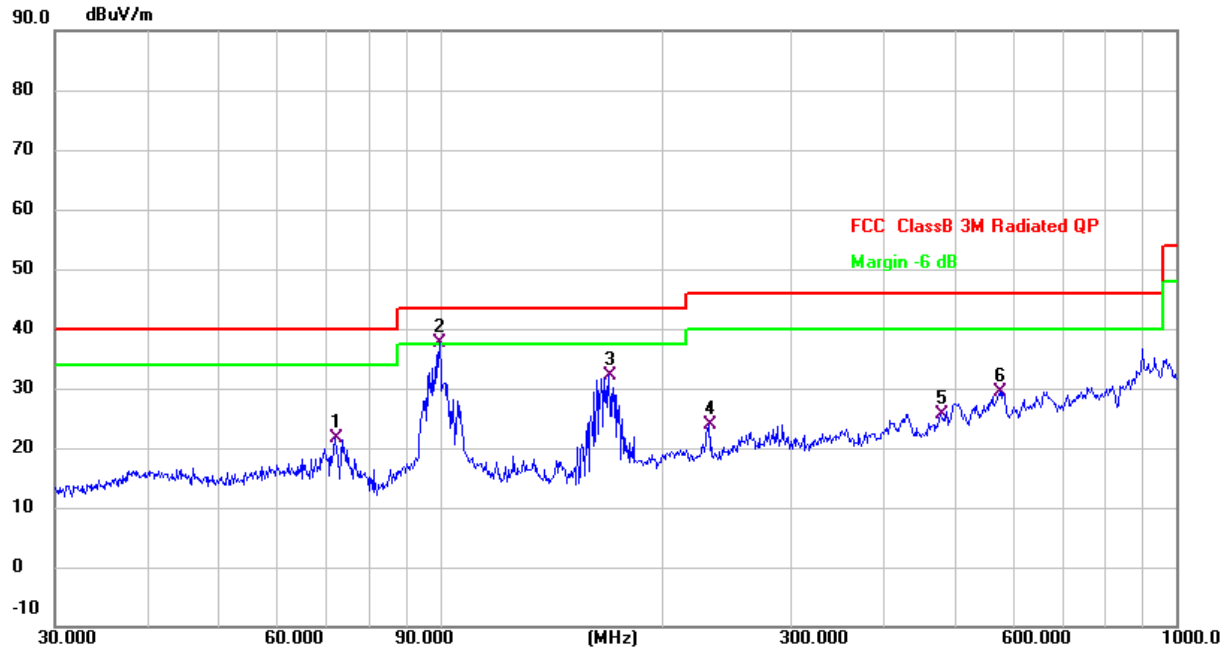

No.	Mk.	Freq.	Reading Level	Correct Factor	Measure-ment	Limit	Over	
		MHz	dBuV	dB	dBuV/m	dBuV/m	dB	Detector
1		72.0843	38.28	-16.69	21.59	40.00	-18.41	QP
2	*	99.8777	49.01	-11.32	37.69	43.50	-5.81	QP
3		169.5990	47.30	-15.13	32.17	43.50	-11.33	QP
4		231.7179	35.52	-11.59	23.93	46.00	-22.07	QP
5		478.8456	32.00	-6.35	25.65	46.00	-20.35	QP
6		576.6443	32.38	-3.11	29.27	46.00	-16.73	QP

EUT:	Magnetic Wireless Car Charger	Model Name:	UBWL379
Pressure:	101kPa	Polarization:	Horizontal
Test voltage:	DC 12V from adapter AC 120V/60Hz	Test mode:	Mode 1

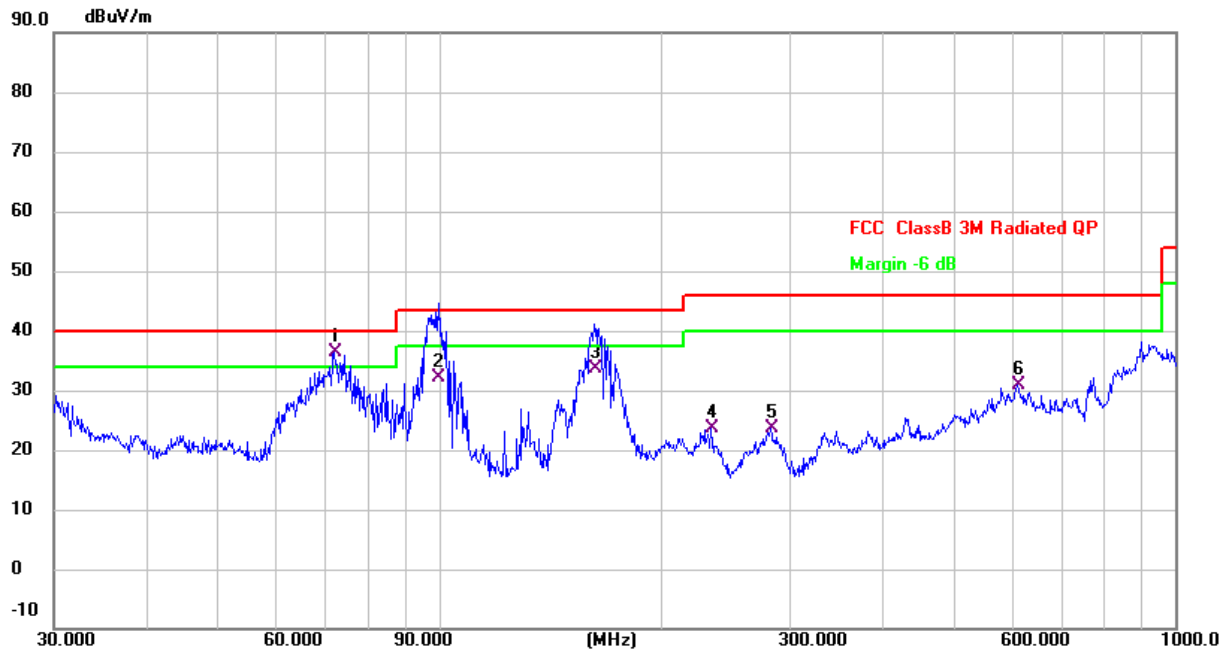

No.	Mk.	Freq.	Reading Level	Correct Factor	Measure-ment	Limit	Over	
		MHz	dBuV	dB	dBuV/m	dBuV/m	dB	Detector
1	*	72.0843	49.82	-13.56	36.26	40.00	-3.74	QP
2		99.8777	44.43	-12.23	32.20	43.50	-11.30	QP
3		162.6106	50.72	-17.12	33.60	43.50	-9.90	QP
4		234.1684	33.58	-9.94	23.64	46.00	-22.36	QP
5		281.9946	32.02	-8.48	23.54	46.00	-22.46	QP
6		609.9217	30.80	0.06	30.86	46.00	-15.14	QP

5.4 Occupied bandwidth

5.4.1 Test method

Use the following spectrum analyzer settings:
Span = approximately 2 to 3 times the 20 dB bandwidth, centered on a hopping channel
RBW ≥1% of the 20 dB bandwidth
VBW ≥RBW
Sweep = auto
Detector function = peak
Trace = max hold
The EUT should be transmitting at its maximum data rate. Allow the trace to stabilize. Use the marker-to-peak function to set the marker to the peak of the emission. Use the marker-delta function to measure 20 dB down one side of the emission. Reset the marker-delta function, and move the marker to the other side of the emission, until it is (as close as possible to) even with the reference marker level. The marker-delta reading at this point is the 20 dB bandwidth and 99% occupied bandwidth of the emission.

5.4.2 Test result

Frequency (kHz)	20dB emission bandwidth (kHz)	99% occupied bandwidth (kHz)
117	8.508	7.253

Test plots as below:

Photographs of the Test Setup

Radiated emission

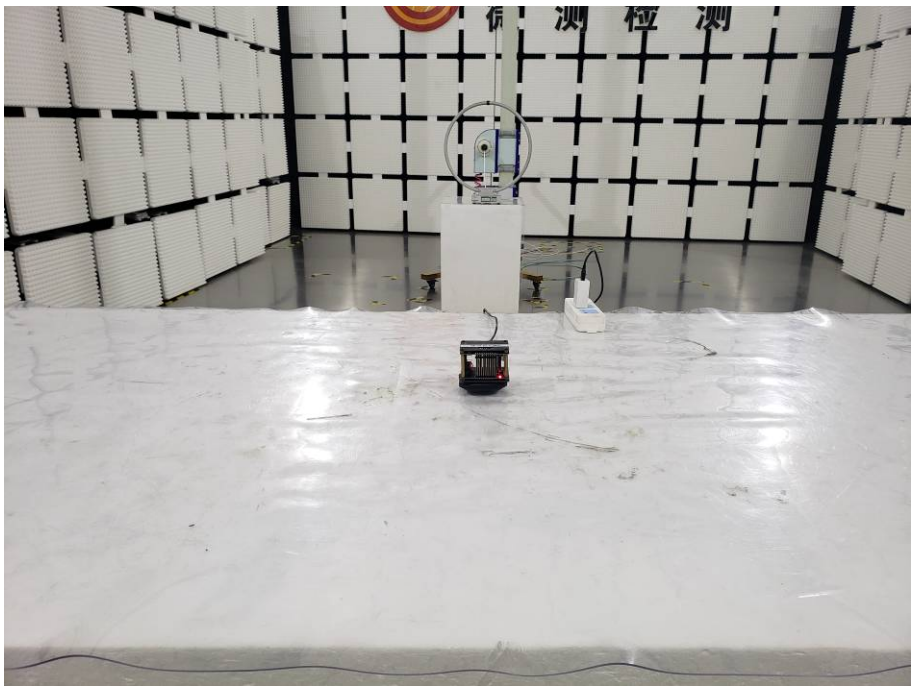

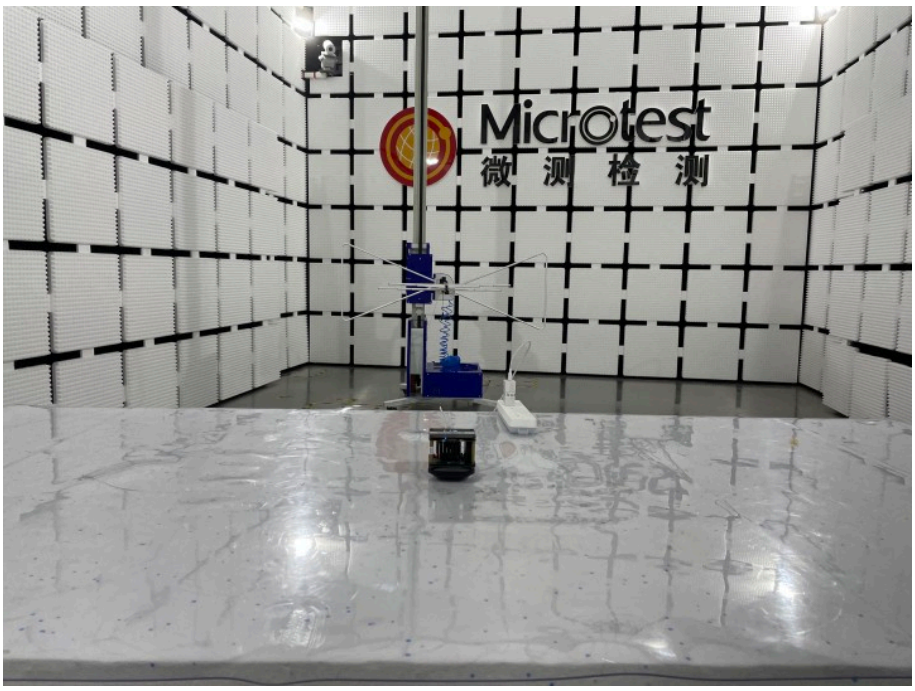

Conducted emission

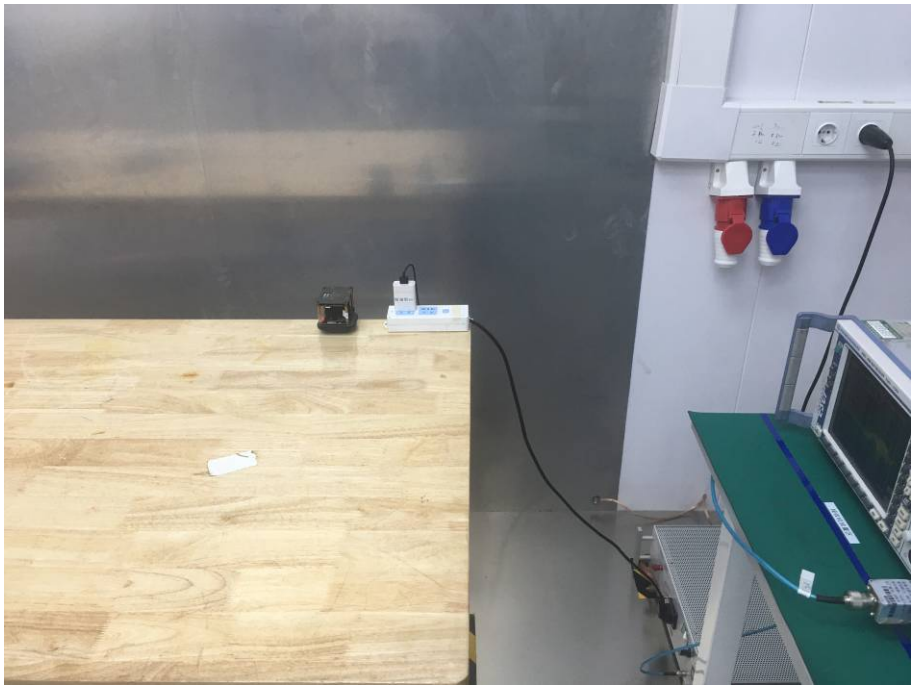

Photographs of the EUT

See the APPENDIX 1- EUT PHOTO.

----END OF REPORT----