FCC:
This device complies with part 15 of the FCC Rules. Operation is subject to the condition that this device does not cause harmful interference
(1) this device may not cause harmful interference, and
(2) this device must accept any interference received, including interference that may cause undesired operation.
Changes or modifications not expressly approved by the party responsible for compliance could void the user's authority to operate the equipment.
NOTE: This equipment has been tested and found to comply with the limits for a Class B digital device, pursuant to Part 15 of the FCC Rules. These limits are designed to provide reasonable protection against harmful interference in a residential installation. This equipment generates, uses and can radiate radio frequency energy and, if not installed and used in accordance with the instructions, may cause harmful interference to radio communications. However, there is no guarantee that interference will not occur in a particular installation.
If this equipment does cause harmful interference to radio or television reception, which can be determined by turning the equipment off and on, the user is encouraged to try to correct the interference by one or more of the following measures:
-- Reorient or relocate the receiving antenna.
-- Increase the separation between the equipment and receiver.
-- Connect the equipment into an outlet on a circuit different from that to which the receiver is connected.
-- Consult the dealer or an experienced radio/TV technician for help.
The device has been evaluated to meet general RF exposure requirement.
The device can be used in portable exposure condition without restriction.

FCC ID: 2ASV5-ATC001

IC Statement
This device contains licence-exempt transmitter(s)/receiver(s) that comply with Innovation, Science and Economic Development Canada' s licence-exempt RSS(s). Operation is subject to the following two conditions:
(1) This device may not cause interference; and
(2) This device must accept any interference, including interference that may cause undesired operation of the device.
The term "IC: " before the certification/registration number only signifies that the Industry Canada technical specifications were met. This product meets the applicable Industry Canada technical specifications.
Cet appareil contient des é metteurs / r é cepteurs exempt é s de licence conformes aux RSS (RSS) d'Innovation, Sciences et D é veloppement é conomique Canada. L'exploitation est autoris é e aux deux conditions suivantes : (1) l'appareil ne doit pas produire de brouillage, et (2) l'utilisateur de l'appareil doit accepter tout brouillage radio é lectrique subi, m ê me si le brouillage est susceptible d'en compromettre le fonctionnement.

IC:24369-ATC001

V1.0

Please read this manual before operating your action camera, and keep it for further reference.

USER MANUAL

AKASO Brave 7 LE Action Camera

AKASO

CONTENTS

What's in the Box	1
Your Brave 7 LE	2
Getting Started	6
Customizing Your Brave 7 LE	7
Connecting to the App	8
Playing Back Your Content	15
Deleting Your Content	17
Offloading Your Content	17
Maintaining Your Camera	18
Maximizing Battery Life	18
Battery Storage and Handling	18
Remote	19
Mounting Your Camera	20
Contact Us	22

WHAT'S IN THE BOX

Brave 7 LE	Waterproof Housing	Handle Bar/ Pole Mount	Mount 1	Mount 2
Mount 3	Mount 4	Mount 5	Mount 6	Mount 7
Mount 8	Charger	Battery	USB Cable	Helmet Mounts
Bandages	Tethers	Lens Cloth	Remote	User Manual

How to use all sorts of accessories of action camera?

Scan the following QR code or enter the website to watch the video.

https://youtu.be/UqKtElRXqI8

Unboxing: 00:00-00:19
How to remove the camera from the box it's mounted on? : 00:20-00:31
How to remove the camera from the waterproof case? : 00:32-01:05
How to mount the camera to a tripod? : 01:17-01:49
How to mount the camera to your body? : 01:50-02:08
How to mount the camera to a self stick? : 02:09-02:55
How to mount the camera to a bike? : 02:56-04:34
How to mount the protective backdoor? : 04:35-04:59
How to mount the camera to a helmet? : 05:03-11:16

YOUR BRAVE 7 LE

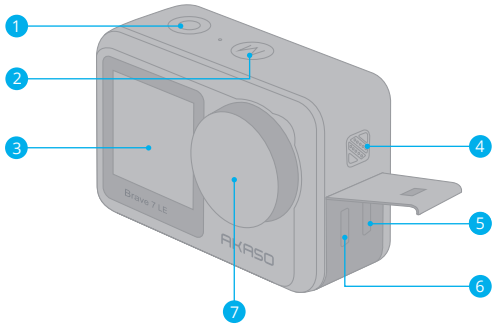

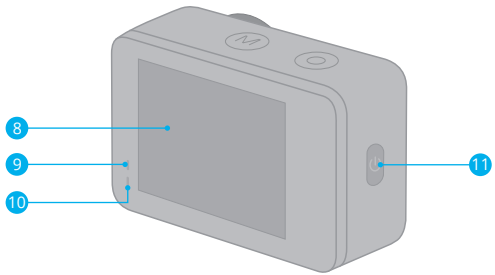

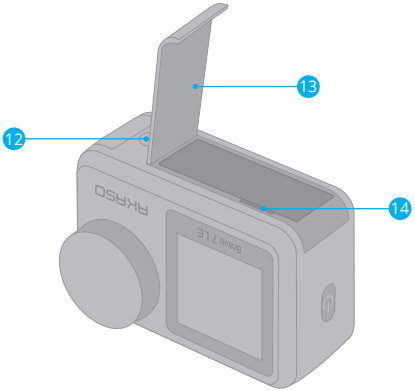

1. Shutter/Select Button
2. Mode/Exit Button
3. Front Screen
4. Speaker
5. Micro HDMI Port
6. Micro USB Port
7. Lens
8. Touch Screen
9. Charging Indicator
10. Working Indicator
11. Power Button
12. Tripod Hole
13. Battery Door
14. MicroSD Slot

Note: Camera does not record sound when it is in the waterproof case.

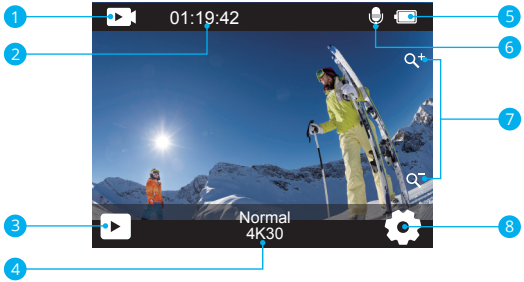

1. Mode
2. Recording Time/Photos Remaining
3. Playback
4. Current Shooting Mode
5. Battery Status
6. Audio Recording
7. Zoom Level
8. Settings

Swipe your finger from the button to the top on the screen, you can quickly adjust the resolution, quality and EIS settings on the shortcut menu. Swipe your finger across the screen to scroll through the options.

Swipe your finger from the top to the button on the screen, you can quickly turn off your screen or power off your camera on the shortcut menu. To turn on your screen again, press the Shutter button or tap the screen then swipe your finger from left to right on the screen.

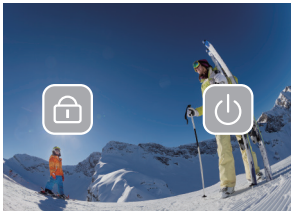

Tap the current shooting mode area on the screen to enter the video or photo shortcut menu. You can switch to different shooting modes by tapping the mode icon.

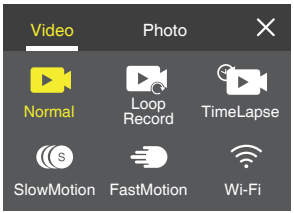

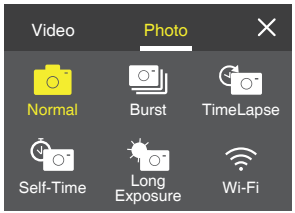

Switch Between Front Screen and Touch Screen

Press and hold Mode button to switch between the front screen and the touchscreen camera view. You cannot switch between the screens while the video is recording.

Note: The following instructions are only applicable to the touchscreen, they will not work on the front screen.

GETTING STARTED

Welcome to your AKASO Brave 7 LE. To capture videos and photos, you need a microSD card to start recording (sold separately).

MICROSD CARDS

Please use brand name memory cards that meet these requirements:

- microSD, microSDHC or microSDXC
- Class 10 or UHS-I rating
- Capacity up to 64GB (FAT32)

Note:

1. Please format the microSD card first in this camera before using. To keep your microSD card in good condition, reformat it on a regular basis. Reformatting erases all your content, so please make sure to offload your photos and videos before reformatting.
2. FAT32 format microSD card stops recording when the file size reaches to 4GB, and starts to record again on a new file.

POWERING ON AND OFF

To Power On:

Press and hold the Power button for 3 seconds. The camera beeps while the camera status light is on. When information appears on the display, your camera is on.

To Power Off:

Press and hold the Power button for 3 seconds. The camera beeps while the camera status light is off.

SWITCHING MODE

Turn on the camera, press Mode button or swipe your finger across the screen to change video or photo mode. More shooting modes are available under the shortcut menu when you tap the current shooting mode area on the screen.

TURNING ON AND OFF Wi-Fi

Turn on the camera, press Power button to turn on Wi-Fi, and press again Power button again to turn off Wi-Fi.

OVERVIEW OF MODES

There are 5 modes: Video, Photo, Playback, Video Setup and Photo Setup.

VIDEO MODE

Video Mode is the default mode when you turn on the camera.
In Video Mode, press Shutter button, the camera starts recording video.
Press Shutter button again to stop recording video. Tap the Zoom icon on the screen to adjust the zoom level.
Note: Camera does not record sound when it is in the waterproof case.

PHOTO MODE

Press Mode button or swipe your finger across the screen to switch to Photo Mode after you turn on camera.
In Photo Mode, press Shutter button to take photos. Tap the Zoom icon on the screen to adjust the zoom level.

PLAYBACK MODE

You can enter the Playback mode by tapping the Playback on the screen directly.
Or press Mode button twice, then press Shutter button or tap Playback icon to enter Playback mode after you turn on camera. You can playback your files in this mode.

VIDEO SETUP MODE

Press Mode button three times, then press Shutter button or tap Video Setup icon to enter Video Setup mode after you turn on camera. You can change video settings in this mode.

PHOTO SETUP MODE

Press Mode button four times, then press Shutter button or tap Photo Setup icon to enter Photo Setup mode after you turn on camera. You can change photo settings in this mode.

CUSTOMIZING YOUR BRAVE 7 LE

Video Shortcut Menu

1. Normal Video

Default setting is Normal Video.

2. Loop Record: 1 Min/3 Min/5 Min

Default setting is 1 Min.
Loop recording allows your camera to overwrite old files with new files. Once the memory card becomes full, the camera will delete the first video file to make room for the latest file. For example, if the setting for loop recording is “1 Minute”, then the camera will create video clips of 1 minute in length, and a 1-minute clip will be deleted when the camera needs more memory.

3. Time Lapse

Time Lapse: 1 Sec/3 Sec/5 Sec/10 Sec/30 Sec/1 Min
Time Lapse Duration: Unlimited/5 Min/10 Min/15 Min/20 Min/30 Min/60 Min
Default setting is 1 Sec and Unlimited.
In Time Lapse Video mode, press Shutter button, the camera records video from frames captured at specific intervals.
Note: Time Lapse Video is captured without audio.

4. Slow Motion

In Slow Motion Video mode, press Shutter button, the camera records slow motion video.

5. Fast Motion: 2x/4x/6x/10x/15x

Default setting is 2x.
Action that appears to move faster than normal on the screen, accomplished by filming the action at less than normal speed in the camera and then projecting it at normal speed.

Photo Shortcut Menu

1. Single Photo

Default setting is Single Photo.

2. Burst Photo: 3 shots/7 shots/15 shots/30 shots

Default setting is 3 shots.

In burst mode, several photographs are captured in quick succession, so it is perfect for capturing fast-moving activities.

3. Time Lapse

Time Lapse: 3 Sec/5 Sec/10 Sec/30 Sec/1 Min

Time Lapse Duration: Unlimited/5 Min/10 Min/15 Min/20 Min/30 Min/60 Min

Default setting is 3 Sec and Unlimited.

Time Lapse Photo captures a series of photos at specified intervals. Use this mode to capture photos of any activity, then choose the best ones later.

4. Self-Time: Delay 2s/Delay 5s/Delay 10s

Default setting is Delay 2s.

Self-Time Mode gives a delay between pressing the shutter release and the shutter's firing.

5. Long Exposure: 1 Sec/2 Sec/5 Sec/8 Sec/30 Sec/60 Sec

Default setting is 1 Sec.

Long exposure means using a long-duration shutter speed to sharply capture the stationary elements of images while blurring, smearing, or obscuring the moving elements.

Video Setup

1. Video Resolution: 4K30fps/2.7K60fps/2.7K30fps/1080P120fps/1080P60fps/1080P30fps/720P240fps/720P120fps/720P60fps

Default setting is 4K30FPS.

Note: When capturing video at high resolutions or high frame rates in warm ambient temperatures, the camera may become warm and use more power.

2. Video Record: Off/On

Default setting is On.

3. Image Stabilization: Off/On

Default setting is Off.

This setting adjusts the footage to offset for motion during capture. The result is smoother footage, especially in activities with relatively small but fast motion including cycling, motorcycling, and handheld uses.

Note: Image stabilization cannot be activated when the video resolution is 1080P120fps, 720P240fps and 720P120fps.

4. Video Quality: High/Middle/Low

Default setting is Middle.

5. Wind Noise Reduction: Off/On

Default setting is Off.

Turn on Wind Noise Reduction, it can lower the noise to an acceptable level.

6. Auto Low Light: Off/On

Default setting is Off.

Auto Low Light mode will automatically adjust settings according to lighting conditions to achieve the best low light performance. Even if you move back and forth between bright and dark environments, you do not need to manually adjust the camera settings.

7. EV: -2.0/-1.0/0.0/+1.0/+2.0
Default setting is 0.
By default, your camera uses the entire image to determine the appropriate exposure level. However, exposure lets you select an area that you want the camera to prioritize when determining exposure. This setting is particularly useful in shots where an important region might otherwise be over or underexposed.

8. Metering: Center/Multi
Default setting is Multi.
The metering mode refers to the way in which a camera determines exposure.

9. Date Stamp: Off/Date/Date&Time
Default setting is Date&Time.
Turn on Date Stamp, this camera adds date stamp to the videos and photos you take.

Photo Setup

1. Photo Resolution: 20MP/16MP/14MP/10MP/8MP/5MP/2MP
Default setting is 20MP.

2. Image Quality: High/Middle/Low
Default setting is High.

3. ISO: Auto/100/200/400/800/1600/3200
Default setting is Auto.
ISO determines the camera's sensitivity to light, and creates a trade-off between brightness and resulting image noise. Image noise refers to the degree of graininess in the image. In low light, higher ISO values result in brighter images, but with greater image noise. Lower values result in lower image noise, but darker images.

4. EV: -2.0/-1.0/0.0/+1.0/+2.0
Default setting is 0.
By default, your camera uses the entire image to determine the appropriate exposure level. However, exposure lets you select an area that you want the camera to prioritize when determining exposure. This setting is particularly useful in shots where an important region might otherwise be over-or underexposed.

5. Metering: Center/Multi
Default setting is Multi.
The metering mode refers to the way in which a camera determines exposure.

6. Date Stamp: Off/Date/Date&Time
Default setting is Date&Time.
Turn on Date Stamp, this camera adds date stamp to the videos and photos you take.

Camera Settings

1. Sounds: Shutter/Boot-up/Beep/Volume
You can turn on or off these sound effects and adjust the volume of the camera in this setting.

2. Angle: Super Wide/Wide/Medium/Narrow
Default setting is Super Wide.
The angle refers to how much of the scene (measured in degrees) can be captured through the camera lens. Super Wide angle captures the largest amount of the scene, while Narrow angle captures the least.

3. Diving Mode: Off/On
Default setting is Off.
Turn on Diving Mode, it can compensate for the lack of red light in underwater scenes. Diving Mode is designed to be used in tropical and blue water, optimized for use between 10 and 80 feet.

4. Effect: Normal/BW/Natural/Negative/Warm/Brightness Contrast
Default setting is Normal.

5. Distortion Calibration: Off/On
Default setting is Off.
Turn on Distortion Calibration, it can correct the image distortion.

6. Driving Mode: Off/On
Default setting is Off.
If you turn on Driving Mode and connect camera with car cigarette lighter, the camera will turn on automatically if you start your car and will turn off if you stop your car.

7. Upside Down: Off/On
Default setting is Off.
This setting determines the orientation of your video or photos to help you prevent upside down footage.

8. Screen Saver: Off/1 Min/3 Min/5 Min
Default setting is 1 Min.
Screen saver helps to turn off the display after a period of inactivity to save battery life. To turn on the display again, press any button or tap the screen on the camera.

9. Auto Power Off: Off/1 Min/3 Min/5 Min
Default setting is 3 Min.
Auto Power Off helps to power off camera after a period of inactivity to save battery life.

10. Power Frequency: 50Hz/60Hz
Default setting is 50Hz.

11. White Balance: Auto/Daylight/Shade/Tungsten Light/White Fluorescent
Default setting is Auto.
White Balance lets you adjust the color temperature of videos and photos to optimize for cool or warm lighting conditions.

12. Date&Time: MM/DD/YY

13. Language: English/ Deutsch/ Français/ Italiano/Español/Português/日本語
Default setting is English.

14. Format Card: Yes/No
Default setting is No.
To keep your microSD card in good condition, reformat it on a regular basis. Reformatting erases all of your content, so be sure to offload your photos and videos first.

15. System: Factory Reset/System Info/Card Info
You can check the system information of your camera under this menu.

Factory Reset: Yes/No
Default setting is No.
This option resets all settings to their default values.

System Info: You can check the model and firmware version of your camera.

Card Info: You can check the card capacity and remaining space of your microSD card.

CONNCTING TO THE APP

Please download and install the **AKASO GO** App in **App Store** or **Google Play** first. The **AKASO GO** App lets you control your camera remotely using a smartphone or tablet.

Features include camera control, live preview, playback, download and settings.

1. Turn on the camera, press Power button to turn on the Wi-Fi. The Wi-Fi name and password are shown on the camera screen.
2. Connect the Wi-Fi "**Brave 7 LE**" and enter the password on your smartphone WLAN setting.
3. Open **AKASO GO** App, tap "**+**" icon on the upper right corner. Add "**Brave 7 LE**" and click the "**Live Preview**".
3. Your camera will be connected with the **AKASO GO** App.

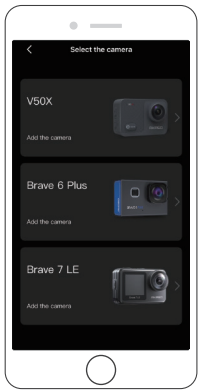

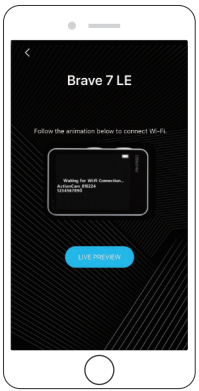

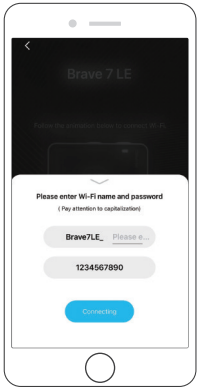

PLAYING BACK YOUR CONTENT

You can playback your content on the camera, your computer, TV, smartphone or tablet. You can also play back content by inserting the microSD card directly into a device, such as a computer or a compatible TV. With this method, playback resolution depends on the resolution of the device and its ability to play back that resolution.

Note: To play back your videos and photos on a computer, you must first transfer these files to a computer. Transferring also frees up space on your microSD card for new content.

Viewing Files on Your Brave 7 LE

Turn on the camera, tap the Playback button on the left side of the screen to enter the Playback Mode.

In Playback Mode, swipe your finger across the screen to scroll through video or photo files.

DELETING YOUR CONTENT

Deleting Files on Your Brave 7 LE

1. Enter Playback mode. If your microSD card contains a lot of content, it might take a minute for it to load.
2. Swipe your finger across the screen to scroll through video or photo files.
3. Tap the Delete icon on the screen → select the files you want to delete → tap the delete icon again.
4. Confirm to delete the selected files or all files.
5. To exit Playback mode, tap Cancel and Return button.

Deleting Files on AKASO App

1. Open the **AKASO GO** App. Connect the camera with the App.
2. Tap Playback icon to see all the videos and photos.
3. Select the photo or video you want to delete and then tap the More icon at the right upper corner, and choose Delete.

OFFLOADING YOUR CONTENT

Offloading Your Content to A Computer

To offload files to a computer, you need a card reader (sold separately). Connect it to the computer via USB port and insert the microSD card. You can then transfer files to your computer or delete selected files by using file explorer.

Offloading Your Content to Smartphone

1. Open the **AKASO GO** App. Connect the camera with the App.
2. Tap Playback icon to see all the videos and photos.
3. Select the photo or video you want to download and then tap the More icon at the right upper corner, and choose Download.

Note:

1. If you cannot offload videos or photos to iPhone or iPad, please enter Setting → Privacy → Photos, find "**AKASO GO**" and select "**Read and Write**".
2. iPhone and iPad do not allow you to download 4K or 2.7K video via App, please offload 4K or 2.7K videos via card reader.

MAINTAINING YOUR CAMERA

Please follow these guidelines to get the best performance from your camera:

1. For best audio performance, shake the camera or blow on the mic to remove debris from the microphone holes.
2. To clean the lens, wipe it with a soft, lint-free cloth. Do not insert foreign objects around the lens.
3. Don't touch the lens with fingers.
4. Keep the camera away from drops and bumps, which may cause damage to the parts inside.
5. Keep the camera away from high temperature and strong sunshine to avoid being damaged.

MAXIMIZING BATTERY LIFE

If the battery reaches 0% while recording, the camera will save the file and power off. To maximize battery life, follow these guidelines when possible:

- Turn off Wireless Connections
- Capture video at lower frame rates and resolutions
- Use Screen Saver setting.

BATTERY STORAGE AND HANDLING

The camera contains sensitive components, including the battery. Avoid exposing your camera to very cold or hot temperatures. Low or high temperature conditions may temporarily shorten the battery life or cause the camera to temporarily stop working properly. Avoid dramatic changes in temperature or humidity when using the camera, as condensation may form on or within the camera.

- Do not dry the camera or battery with an external heat source such as a microwave oven or hair dryer. Damage to the camera or battery caused by contact with liquid inside the camera is not covered under the warranty.

- Do not store your battery with metal objects, such as coins, keys or necklaces. If the battery terminals come in contact with metal objects, this may cause a fire.

- Do not make any unauthorized alterations to the camera. Doing so may compromise safety, regulatory compliance, performance, and may void the warranty.

WARNING: Do not drop, disassemble, open, crush, bend, deform, puncture, shred, microwave, incinerate or paint the camera or battery. Do not insert foreign objects into the battery opening on the camera. Do not use the camera or the battery if it has been damaged - for example, if cracked, punctured or harmed by water. Disassembling or puncturing the battery can cause an explosion or fire.

REMOTE

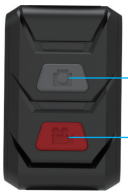

Photo Button

Video Button

Splashproof only, not waterproof.

VIDEO

To record Video, verify the camera in Video mode.

To start recording:

Press the Video Button. The camera will emit one beep and the camera light will flash while recording.

To stop recording:

Press the Video Button again. The camera will emit one beep and the camera light will stop flashing while recording.

PHOTO

To capture a photo, verify the camera in Photo mode.

To take a photo:

Press the Photo Button. The camera will emit a camera shutter sound.

MOUNTING YOUR CAMERA

Attach your camera to helmets, gear and equipment.

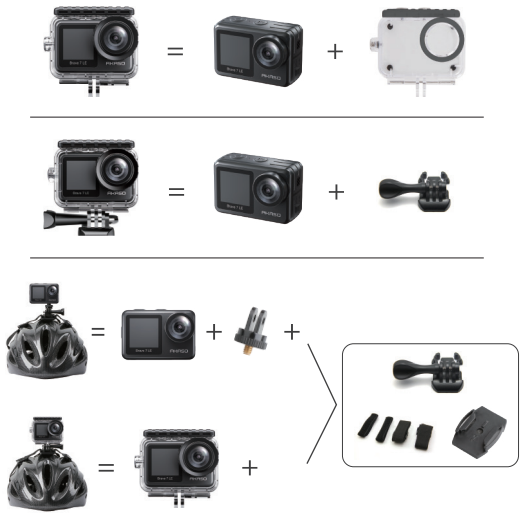

CONTACT US

For any inquiries with AKASO products, please feel free to contact us, we will respond within 24 hours.

E-mail: cs@akasotech.com

Tel: (888) 466-9222 (US) Mon-Fri (except holiday) 9am-5pm (EST)

Official website: www.akasotech.com