CLASSICAL TURNTABLE WITH AM/FM RADIO,CD PLAYER,CASSETTE,USB RECORDING,AUX IN,BLUETOOTH

MODEL:411A
Nostalgic Music System
Operating Instructions Manual

CAUTION

TO PREVENT FIRE OR SHOCK HAZARD,DO NOT USE THIS PLUG WITH ANEXTENSION CORD,RECEP TACLE OR OTHER OUTLET UNLESS THE BLADES CAN BE FULLY INSERTED TO PREVENT BLADE EXPOSURE.TO PREVENT FIRE OR SHOCK HAZARD,DONOT EXPOSE THISAPPLINACE TO RAIN OR MOISTURE.

The lightning flash with arrow-head symbol, within an equi-lateral triangle is intended to alert the user to the presence of uninsulated'dangerous voltage' within the product's enclosure that may be of sufficient magnitude to constitute a risk of electric shock to persons.	CAUTION RISK OF ELECTRIC SHOCK DO NOT OPEN WARNING:TOREDUCETHE RISK OF ELECTRIC SHOCK DO NOT REMOVE COVER (OR BACK), NO USER SERVICEABLE PARTS INSIDE REFER SERVICING TO QUALIFIED SERVICE PERSONNEL.	The exclamation point within an equilateral triangle is in-tended to alert the user to the presence of important operating and maintenance (servicing) instructions in the literature accompany-ing the appliance.

IMPORTANT SAFETY INSTRUCTIONS

1.) Read these instructions.

2.) Keep these instructions.

3.) Heed all warnings.

4.) Follow all warnings.

5.) Do not use this apparatus near water.

6.) Clean only with dry cloth.

7.) Do not block any ventilation openings.Install in accordance with the manufacturer's instructions.

8.) Do not install near any heat sources such as radiators,heat registers,stoves,or other apparatus (including amplifiers)that produce heat.

9.) Protect the power cord from being walked on or pinched particularly at plugs,convenience receptacles,and point where they exit from the apparatus.

10.) Only use attachments / accessories specified by the manufacturer.

11.) Unplug this apparatus during lightning storms or when unused for long periods of time

12.) Refer all servicing to qualified service personnel.Servicing is required when the apparatus has been damaged in any way,such as power-supply cord or plug is damaged,liquid has been spilled or objects have fallen into the apparatus,the apparatus has been exposed to rain or moisture,does not operate normally,or has been dropped.

13.) This appliance shall not be exposed to dripping or splashing water and no object filled with liquids such as vases shall be placed on the apparatus.

14.) Do not overload wall outlet.Use only power source as indicated.

IMPORTANT NOTES

Avoid installing this unit in places exposed to direct sunlight or close to heat radiating appliances such as electric heaters, on top of other stereo equipment that radiates too much heat, places lacking ventilation or dusty areas, places subject to constant vibration and/or humid or moist areas.

Do not attempt to clean this unit with chemical solvents as this might damage the finish. Use a clean dry cloth.

Operate controls and switches as described in the manual.

Before turning On the power, make certain that power cord is properly installed.

Store your CDs, In a cool area to avoid damage from heat.

When moving the set, be sure to first disconnect the power cord.

PREPARATION FOR USE

UNPACKING AND SET UP

- Carefully remove the unit from the display carton and remove all packing material from the unit.
- Unwind the AC power cord and extend it to its full length.
- Unwind the FM Antenna wire and extend it to its full length.
- Place the unit on a stable, level surface, convenient to an AC outlet, out of Direct sunlight, and away from sources of excess heat, dust, moisture, humidity or strong magnetic fields.

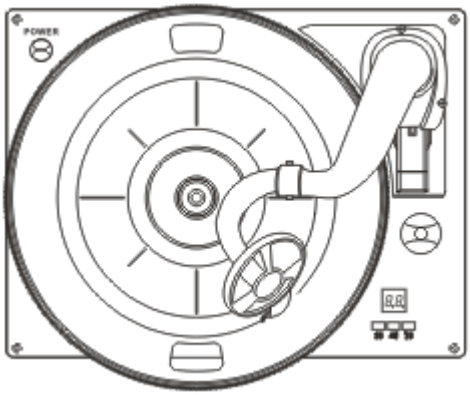

- Remove the opaque white plastic stylus cover from the phonograph stylus by sliding it In the direction of the arrow.

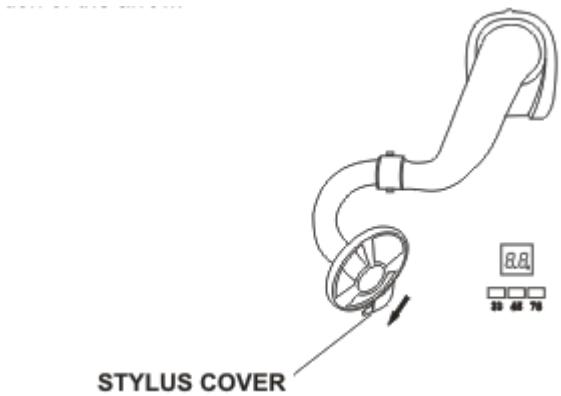

POWER SOURCE

This product is designed to operate on 230V 50Hz AC only. Attempting to operate this system from any other power source may cause damage to the system, and such damage is
not covered by your warranty.

NOTE: You will note that this system is equipped with domestic standard AC power plug. If this plug does not fit into your existingAC outlet, do not try to defeat this safety feature by filing the wide blade to make it fit into your outlet. If this plug will not fit into your outlet, you probably have an outdated non-polarized AC outlet. You should have your outlet changed by a qualified licensed electrician.

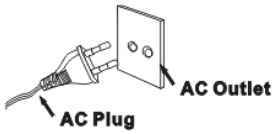

PROTECT YOUR FURNITURE

This model is equipped with non-skid rubber 'feet' to prevent the product from moving when you operate the controls. These 'feet' are made from non-migrating rubber material specially formulated to avoid leaving any marks or stains on your furniture. However certain types of oil based furniture polishes, wood preservatives, or cleaning sprays may cause the rubber 'feet' to soften, and leave marks or a rubber residue on the furniture. To prevent any damage to your furniture we strongly recommend that you purchase small self-adhesive felt pads, available at hardware stores and home improvement centers everywhere, and apply these pads to the bottom of the rubber 'feet' before you place the product on fine wooden furniture.

LOCATION OF CONTROLS AND INDICATORS

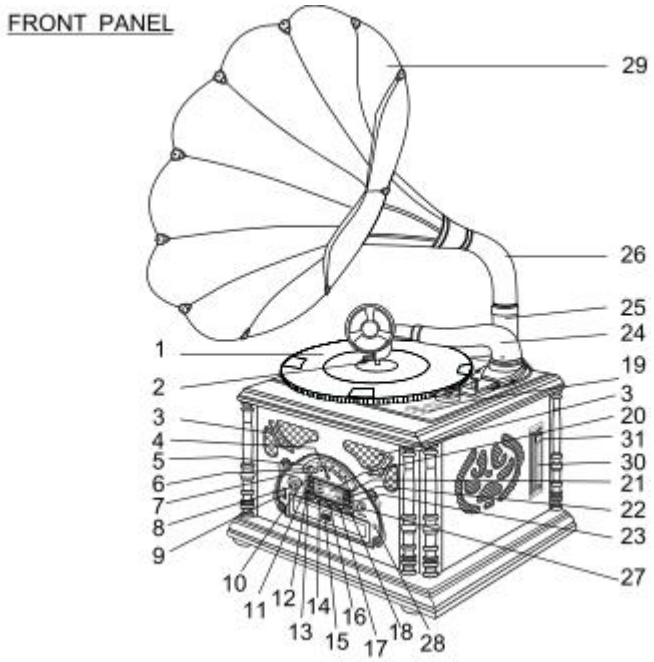

1) Turntable.
2) Stylus.
3) Speakers.
4) Tuning Control Knob.
5) FM Dial Scale.
6) Bluetooth Indicator.
7) AM Dial Scale.
8) AM/FM/PH/CD/USB/TAPE Function Selector.
9) USB Socket.
10) RANDOM Control Button.
11) REPEAT Control Button.
12) PROGRAM Control Button.
13) PLAY/PAUSE Control Button.
14) STOP Control Button.
15) CD Drawer.
16) SKIP REV. Control Button.
17) SKIP FWD. Control Button.
18) OPEN/CLOSE Control Button.
19) PHONO Speed Selector.
20) CD Track Number Display.
21) REC Control Button.
22) FOLDER+/+10 Control Button.
23) FOLDER-/-10 Control Button.
24) Tone Arm.
25) Syphon.
26) Connector Tube.
27) OFF/VOLUME Knob.
28) PHONE Jack.
29) Big Horn Speaker.
30) Cassette Player Slot.
31)Cassette EJ/FF Button (Eject/Fast Forward.)

BACK PLNEL

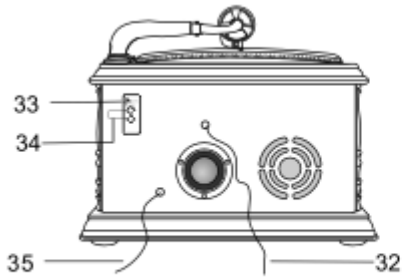

PHONOGRAPH

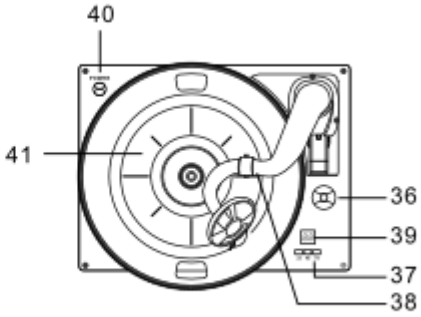

32.) Antenna Jack/FM Antenna.
33.) AUX IN (Audio input)
34.) LINE OUT Jack(R/L)
35.)AC Power Cord

36.)45 RPM Adapter
37.)Speed Selector(33/45/78 RPM)
38.)Tone Arm with Stylus
39.)Speed Display
40.)PHONO Power Switch
41.)Turntable.

REMOTE CONTROL OPERATION:

R1) OPEN/CLOSE.
R2) RECORD.
R3) REPEAT.
R4) PLAY/PAUSE.
R5) DN/FB(SKIP REV.).
R6) UP/FF(SKIP Forward.).
R7) STOP.
R8) TRACK-10.
R9) TRACK+10.
R10) RANDOM.
R11) DELETE.
R12) PROGRAM.

NOTE:All of the buttons on the remote control have the same function as these buttons in the unit.This remote control just used for CD/MP3 and USB mode.

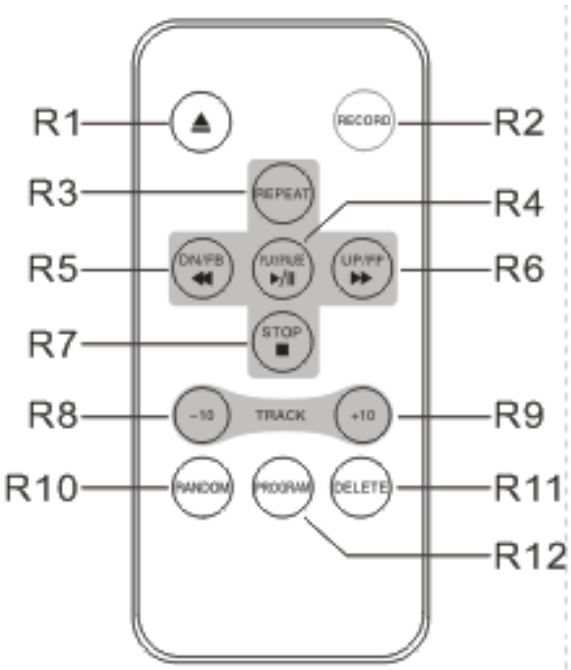

PARTS LIST

A) Horn Speaker (1pc)

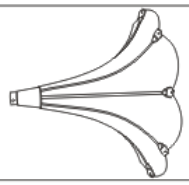

B) U-type Bracket (1pc)

C) Middle Tube (1pc)

D) Bottom Tube (1pc)

E) Screw A (2pcs)
(KM5*8mm)

F) Screw B (2pcs)
(PM4*16mm)

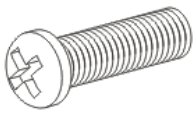

G) Screw C (3pcs)
(BA4*18mm)

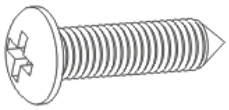

H) Screw D (4pcs)
(KA3*14mm)

Important notes:

Assemble this unit on clean and smooth surface, so as not to scratch or damage the surface of the unit.

BIG HORN SPEAKER ASSEMBLY INSTRUCTIONS

1.) Look at picture Fig1. According to the correct position, put the big horn speaker(A) into the middle tube(C). Please note to line up the hole on the speaker with the slot on the tube. Be careful that your hand is not inured by the big horn speaker.
2.) Look at Fig2. Fig3. Rotate two screws A (E) clockwise into the hole. Tighten clockwise with a Philip's head screwdriver.
3.) Look at Fig4.It shows the assembled big horn speaker apparatus.

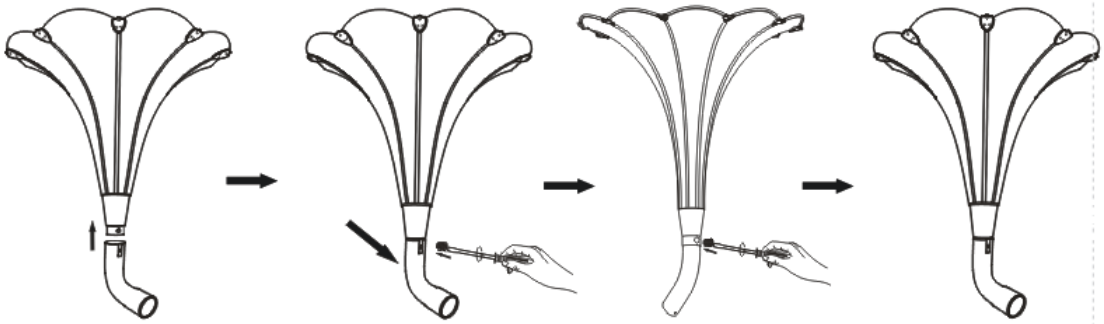

Fig1 Fig2 Fig3 Fig4

4.) Look at Fig5. Put the TR-W102U host cabinet flat on the table. Line the holes on the bottom tube(D) up as shown with the holes on the cabinet so that the open end of the tubing face upwards. Rotate three screws C(G) clockwise into the holes. Tighten with a Philip s head screwdriver.
5.) Look at Fig6. It shows the assermbled TR-W102UB host cabinet apparatus.

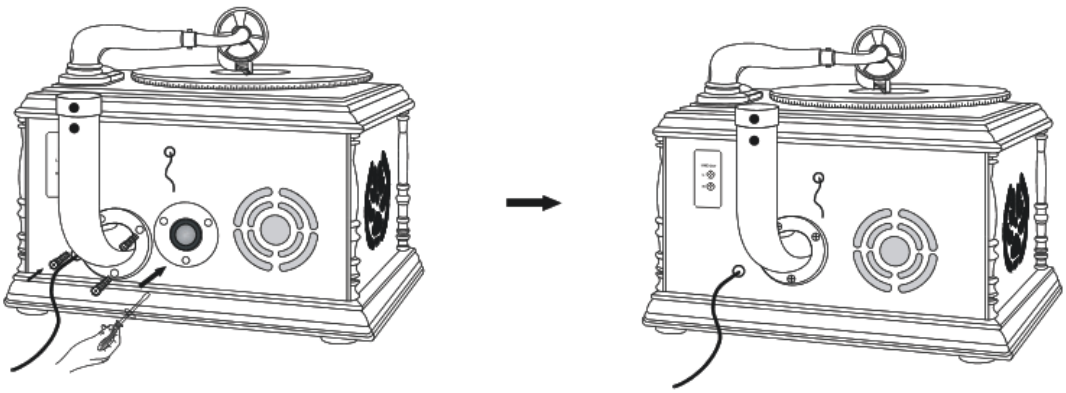

Fig5 Fig6

6.) Look at Fig7. Match the holes on the U-type(B) bracket according with the holes on the TR-W102U host cabinet as shown. Rotate clockwise four screws D(H) into the holes on the sides and one screw B(F) inot the middle and tighten.

7.) Look at Fig8. It shows the assembled TR-W102U host cabinet with the U-type bracket (B) apparatus.

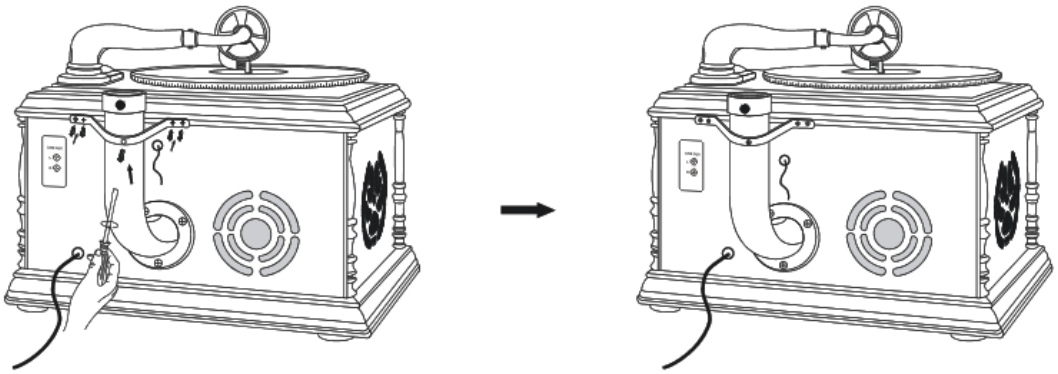

Fig7 Fig8

8.) Look at Fig9. Nest the assembled big horn speaker (A) into the tubing of the TR-W102U host cabinet in the correct position. Rotate one screw B(F) clockwise into the hole. Tighten clockwise with a Philip's head screwdriver. It should be able to be turned freely by rotating the big horn speaker lightly.

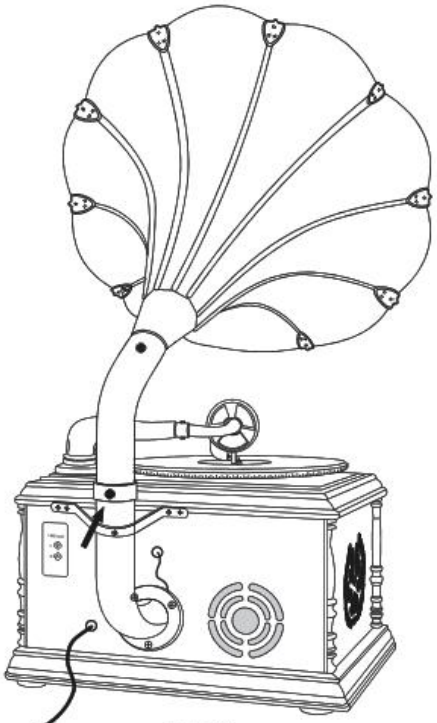

Fig9

OPERATING INSTRUCTIONS

RADIO OPERATION

1.) To turn on the system ‘ON’, rotate the OFF/VOLUME control clockwise until a ‘click’ is heard, and set the Volume to a low level. The backlight remains ‘On’.
2.) Set the Function selector(AM/FM/PH/CD/USB/TA) to AM or FM position.
3.) Rotate the TUNING control to tune the desired radio station.
4.) Adjust the VOLUME control to a desired level.

ANTENNA INFORMATION

The AM antenna is inside the cabinet. If AM reception is unsatisfactory try repositioning the cabinet slightly until the internal antenna is picking up the strongest signal.
The FM wire antenna is located on the back cabinet. If necessary adjust the position and direction of this antenna until you find the position that provides the best reception.

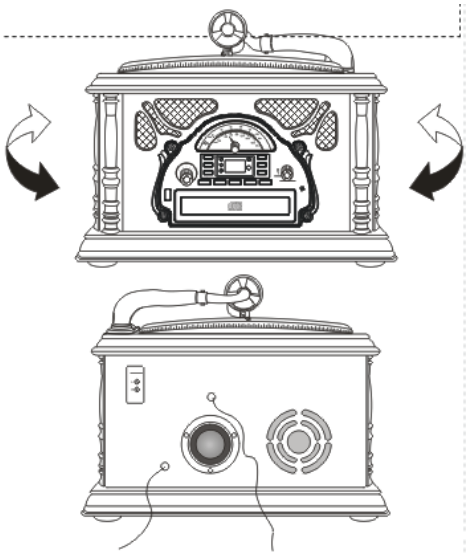

CD OPERATION

NOTE: You may level hold the PLAY/PAUSE button to change the playing mode between CD and USB.
1.)To turn the system”on”,press the POWER button at the side of the unit, and set the volume to a low level.
2.) Set the Function selector(AM/FM/PH/CD/USB) to the CD position.
3.) Press the OPEN/CLOSE button to open the CD drawer. ’ NOd’ will be shown on the disc if has no disc in the CD drawer
4.) Place your disc(MP3 is compatible) in the CD drawer with the label side facing up.

5.) Press the OPEN/CLOSE button again to close the CD drawer. The disc will spin for a few seconds while the player is reading the disc, then the disc stops spinning and start to play the first track on the disc. The playing track number, Cd and the folder name will be shown on the screen 5 seconds in turn during the playback. For example: ‘001’’Cd’’F01'.
6.) Press the SKIP REV.(DN/FR) or SKIP FWD.(DN/FF) button to choose play the desired track.
7.) Adjust the OFF/VOLUME to the desired level.
8.) Playback will continue until the end of this disc. You may stop at any time by pressing the STOP button.

USB OPERATION

1.) Rotate the OFF/VOLUME control clockwise until a ‘click’ is heard, set the volume to the desired level. ‘NOF’ will be shown on the display if no tracks in USB.
2.) Plug the U disk into the USB socket, level hold the PLAY/PAUSE button for 3 seconds to enter into USB mode, ‘USb’ will be shown on the screen 1 second. The player will begin to play the first song on the USB. the playing track number, USb and the folder name will be shown on the screen 5 seconds in turn during the playback. For example: ‘001’’USb’’F01'.
3.) PLAY/PAUSE, SKIP REV. / SKIP FWD.(DN/FR, UP/FF) and STOP buttons are the same function as in CD playback.

NOTE: By using USB during recording or playback mode, pls. stop the playback function first and turn off the system, then take out off the USB from the USB socket avoid damage the USB and the system.
The time of reading the USB by the system will based on files in your USB, the longer if more, the shorter if smaller.

REPEAT PLAYBACK

This feature allows you to continuously repeat a single track or the entire disc.
Press SKIP REV. or SKIP FWD. button to select the desired track and press PLAY/PAUSE button to begin play, then press REPEAT button once will repeat the playback of the selected track. The Repeat indicator flashes.
Press the REPEAT button twice will repeat playback of the entire disc, the Repeat indicator remains ’ON’.

Note: To cancel Repeat Playback, press the REPEAT button until the Repeat indicator goes ‘Off’. Repeat playback is also canceled by pressing
the STOP button, or setting the function selector to the AM、FM、PH、or USB position.

PROGRAMMED PLAYBACK

This feature allows you to program up to 20 CD tracks and 99 MP3 tracks on a disc for playback in any desired order.

1.) Press the PROGRAM button to enter the Program mode. The program number briefly shows ‘ P01', the Program indicator flashes.
2.) Press SKIP REV. or SKIP FWD. button to select the first track number you wish to enter in the program memory. Example: Track Number ‘008’.
3.) When the desired track number appears on the display, press the PROGRAM button again to enter track in memory. The Program number briefly show ‘P02’.
4.) Repeat steps 2-3, selecting a different track number each time until you have entered up to 20 CD tracks and 99 MP3 tracks in the program memory.

NOTE: You may program the same track number to play multiple times in the program sequence if desired.

5.) Press PLAY/PAUSE button to begin programmed playback. The PROGRAM indicator stops flashing and remains ‘ On’. Playback will begin with the first track you programmed and will continue until the last programmed track has played. Press SKIP FWD. or SKIP REV. button to select a specific track in the programmed tracks.
6.) After the last track has played, the player stops and the display shows the total number of tracks on the disc and Cd 5 seconds in turn. However, the program sequence has been canceled in the memory.The program indicator goes ‘Off’.

RANDOM PLAYBACK

In CD/MP3 playback, press RANDOM button once enter into random function. RANDOM indicator remains ‘On’. Press SKIP FWD. or SKIP REV. button to choose the tracks in the disc randomly. Press RANDOM button again or press STOP button to cancel RANDOM function, the RANDOM indicator goes ‘Off’.

CASSETTE OPERATION

Note:Before inwerting a tape in the player be sure that there is no excess slack in the cassette that could become jammed in the mechanism. Refer to the Care and Maintenance section for instructions on removing excess slack from the cassette.

1.) To turn the system”on”,perss the POWER button at the side of the unit, and set the volume to a low level.
2.) Set the function selector (AM/TM/PH/CD/USB/TA)to TA position,”TAP” will be shown on the display.
3.) ilustration, with the side you wish to play facing”up”and the open end on the right side.

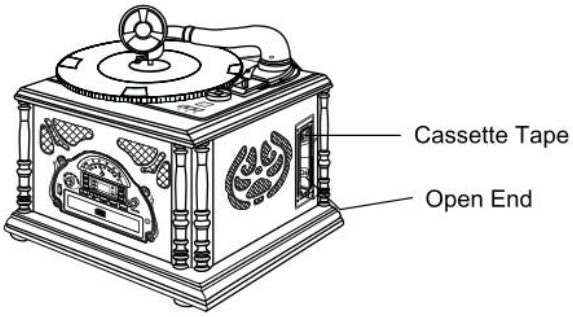

4.) Cassette playback begins as soon as the tape is inserted .Adjust the OFF/VOLUME control to the desired level.
5.) To advance the tape rapidly,depress the EJ/FF(Eject/Fast Forward)button approcimately half way. The tape will move forward rapidly as long aw the button is depressed.Nomal playback will resume when the button is released.
6.) When the tape ends the player stops automatically.Depress the EJ/FF(Eject/Fast Forward)button completely to remove the cassette from the player.You may press the EJ/FF(Eject/Fast Forward)button to stop playback and remove the cassette at any time.
7.) To turn the system”off”, rotate the OFF/VOLUME control counter clockwise until a”click”is beard.

PLAYING RECORDS

This system includes a full-size, 3-speed,belt-drive turntable. You can play33,45,and78 RPM records.

Raise the CUE lever to lift the tone arm off its rest. Move the tone arm to the edge of the record. The turntable starts automatically. Use the CUE lever to gently lower the tone arm onto the record.

1.) Rotate the OFF/VOLUME control clockwise until a”click”is heard,and set the Volume to a low level.
2.) Set the function selector(AM/FM/PH/CD/USB/TA)to the PHONO position,”PHO”will be shown on the display.

3.) Make sure that you have removed the stylus cover from the stylus and have released the Tone Arm Lock that secured the tone arm to the tone arm rest.
4.) Set the turntable Speed Selector to the appropriate speed,33,45,or78RPM.if you are playing 45 RPM singles, place the 45 RPM adapter on the centre spindle.
5.) Place your record on the centre spindle.
6.) Raise the CUE lever to lift the ton arm off its rest. Move the tone arm to the edge of the record. The turntable starts automatically.
7.) Use the CUE lever to gently lower the tone arm onto the record.
8.) Press PHONO switch and the record will start turning.
9.) Adjust the VOLUME control to the desired level.
10.) When the tone arm reaches the end of the record,it will continue turning until PHONO switch is pressed again.

NOTE: Do not turn or stop the turntable manually. Moving or jarring the Turntable without securing the Tone Arm clamp could result in damage to the Tone Arm.

SKIPPING TRACKS AND HIGH SPEED MUSIC SEARCHING

During CD or MP3(in CD or USB mode) playback, repeatedly press SKIP REV.(DN/FR) or SKIP FWD(DN/FF) buttons to skip to higher or lower number tracks. When the desired track number appears on the display release the buttons and playback will begin on the desired track.

To rapidly search forward or backward within a track to locate a specific musical passage, depress and hold either the SKIP REV.(DN/FB) or SKIP FWD.(UP/FF) buttons. The player will move forward or backward at high
speed as long as the buttons are depressed. When you hear the desired passage release the buttons. Normal playback will resume at that point.

During CD or MP3(in CD/USB mode)playback, repeatedly press FOLDER +/+10 or FOLDER-/-10 buttons on the remote control to skip to higher or lower 10 number tracks by pressing one time. During the CD or MP3(in CD/USB mode) stop mode, repeatedly press FOLDER+/+10 or FOLDER-/-10 buttons on the remote control to skip higher or lower folders. When the desired folder number appears on the display release the buttons and press PLAY/PAUSE button to begin play.

USING STEREO HEADPHONES(NOT INCLUDED)

Connect a set of stereo headphones with a 3.5mm mini-plug to the PHONE jack on the front panel. Before putting on the headphones always set the OFF/VOLUME control to a low level, then put the headphones on and gradually increase the volume to a comfortable listening level. The built-in speakers automatically shut off when headphones are connected to the PHONE jack.

BLUETOOTH FUNCTION OPERATION:

1. Turn on the unit, rotate the volume control to desert level.

Turn the Function Knob to PH mode, and make sure the tone-arm is on the resetting state. A short Bluetooth starting tone can be heard,then the Bluetooth indicator will be flashing.

2. Turn on your Bluetooth device and scan.It will be displayed as “RETRO LINE” when discovered by your Bluetooth device. Enter password”0000” during pairing if necessary
3. When the unit is paired with your Bluetooth device,you can hear a short tone from the speakers.

   Play your Bluetooth device as you normally do and the sound will be played from this unit. Then you may anioy the music.

   Note:

   1. Make sure your Bluetooth device and this unit is within 10 meters
   2. Check and see if there are other Bluetooth devices nearby interfering the signal and connection.
   3. This unit is could be paired by multiple different Bluetooth devices, but could only be connected and played by one of them at a time. Make sure no others device is actively connected to it already when you are trying to connect the one you are wording on.

   AUX IN FUNCTION OPERATION:

   Select to the PHONO function Insert two ends of cord into”AUC IN”socket of unit and corresponding socket of your ecternal device recpectively.Operate external device as usual and through the speaker of unit can hear the songs from the external device.

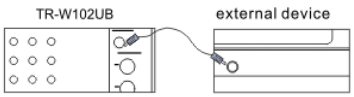

LINE OUT OPERATION

This system includes a set of LINE OUT sockets (L/R) which allow you to record from the Radio or phonograph of this system to an external recording device such as a cassette recorder. Mini-Disc, etc. In any play mode, insert the audio cable (not include) into the matching “LINE OUT” socket of the unit, operate TR-W102UB as usual, and through the speakers of A, you can hear the sound exported from TR-W102UB

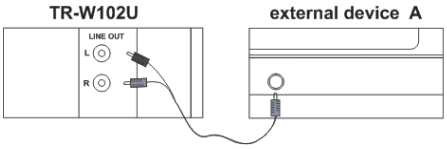

RECORDING tracks from CD/MP3/PHONO to USB

CD RECORDING

1.) To turn the system”on”,press the POWER button at the side of the unit,and set the volume to a low level.
2.) Set the function selector(AM/FM/PH/CD/USB) to CD position, place CD disc into the CD drawer, press PLAY/PAUSE to play the disc.
3.) Press SKIP FWD. or SKIP REV. button to choose record the desired track.
4.) Plug U Disk into USB socket, press RECORD button once to enter into Record mode, ‘rEC’ indicator remains ‘On’. Press RECORD button twice will start to record the playing track into USB, the track will be re-start play from start to record the playing track into USB, the track will be re-start play from the beginning of the selected track. ’rEC’ will be shown on the display and ‘rEC’ indicator flashes.

5.) Press STOP button will cancel the record function. Press STOP button once will stop RECORD mode, and ‘rEC’ indicator goes ‘Off’, press twice will stop CD playing.

NOTE: When the player Playback MP3 disc, the display will show ‘Cd’.

PROGRAM RECORDING

This feature allows you choose the desired tracks to be recorded at one time.

1.) Program tracks you want to record, procedures are the same as those of program playback step 1-4 on page 10. Program indicator remains ‘On’.
2.) Press SKIP FWD. or SKIP REV. button to choose the desired on in the programmed tracks.
3.) Plug U Disc into USB slot. Press PLAY/PAUSE button to begin play the programmed tracks, press RECORD button twice to start record. ‘rEC’ indicator flashes. The display will show the playing track number, ‘Cd’ and folder name of the track selected. For example: ‘001’’Cd’’F01'.
4.) Press STOP button once will cancel the record function and ‘rEC’ indicator goes ‘Off’. Otherwise the recording will be from the first track to the end of the programmed tracks.
5.) After the last track has been recorded, the player stops and the display shows the total number of tracks on the disc and ‘Cd’ 5 seconds in turn. The program sequence has been canceled in the memory. The program indicator goes ‘Off’.

PHONO RECORDING

1.) Rotate the OFF/VOLUME control clockwise until a ‘click’ is heard, and set the volume to a low level.
2.) Set the function selector(AM/FM/PH/CD/USB) to PH position. ‘PHO’ will be shown on the display.
3.) Plug U Disk into USB socket. Place the record on the turntable center and play the record. Press RECORD button twice to enter into record mode. The player will re-start play the first point of the track to be selected. ‘rEC’ will be shown on the display and ‘rEC’ indicator remain flash. The recording will be from the first to the end of the phono record.
4.) Press STOP button once will stop RECORD mode, and ‘rEC’ indicator goes ‘Off’. ‘PHO’ will be shown on the display and phono record will continue to playback.
NOTE:You may refer to playback of USB to play the recorded tracks in USB.

CASSETTE RECORDING

1) Rotate the OFF/VOLUME control clockwise until a”click” is heard, and set the Bolume to a low level.
2) Set the function selevtor(AM/FM/PH/CD/USB/TA) to TA position.
3) Plug U DISK into USB socket.Place the record on the tumtable center and play the record.Press RECORD button twice to enter into record mode. The player will re-start play the flrst point of the tracd to be slected “REC”will be shown in the display and “REC” indicator remain flash.The recording will be from the first to the ane of the phono record.
4) Press STOP button ince will stop RECORD mode. and”REC”indicator goes “Off”,”PHO”will be shown on the display and phono record will continue to playback.

DELETE TRACKS FROM U DISK

Plug U Disc into USB socket. Select CD function, level hold PLAY/PAUSE to select USB mode.press SKIP REV.or SKIP FWD. button in the unit or UP/FF or DN/FB mode,Press DELETE one time only delete 1 track.

CARE AND MAINTENANCE

CASSETTE CARE

Two common causes of trouble experienced when using cassettes are:

1) Tape jamming-Leading to uneven speed in playback.
2) Tape entangling-the tape wraps itself around vital parts of the mechanism.

To reduce the likelihood of these problems occurring, the following precautions should be observed:

Check that there are no loose layers of tape visible through the cassette centre Tindow(see Fig 1)

Take up any loose layers,using a pencil or hecagonally barreled ballpoint pen, before inserting the cassette into the machine (see Fig 2)

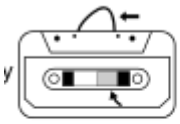

Fig.1

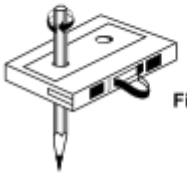

Fig.2

If the cassette feels tighe while performing operation shown (see Fig 2),the tape may be jamming due to ridges formed in the winding of the tape(visble through the centre window). These may be removed in most cases, by fast winding of the cassette from ine end to the other and back again.

Use only well-known brands of tape.Avoid use of C-120 Cassettes.

Furthermore, do not expose cassettes to direct sunlight, dust or oil, and do not touch the tape surfaces.

COMPACT DISC CARE

- To remove a disc from its storage case, press down on the centre of the case and lift the disc out, holding it carefully by the edges.

- Fingerprints and dust should be carefully wiped off the discs recorded surface with a soft cloth. Unlike conventional records, compact discs have no grooves to collect dust and microscopic debris, so gently wiping with a soft cloth should remove most particles. Wipe in a straight line from the inside to the outside of the disc. Small dust particles and light stains will have absolutely no effect on reproduction quality.

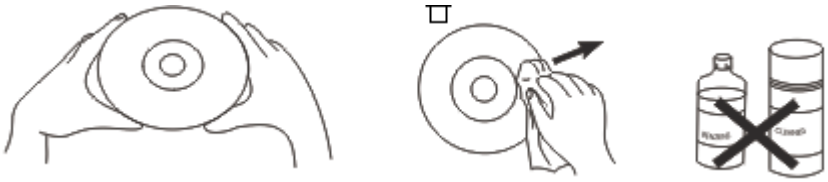

- Clean the disc periodically with a soft, lint-free, dry cloth. Never use detergents or abrasive cleaners to clean the disc. If necessary, use a CD cleaning kit.
- Never write on or affix labels to the surface of compact discs.

CARE OF THE CABINETS

You should care for the cabinet as you would care for any piece of the furniture. When the cabinet becomes dusty wipe it with a soft, non-abrasive dust cloth. If the cabinet becomes smudged with fingerprints you may use any good quality commercial dusting and polishing spray cleaner, however avoid spraying the plastic or metal parts of this system. We recommend that you spray the cleaner on your dust cloth, not directly on the cabinet, to avoid getting any of the spray on the plastic or metal parts.

FCC Statement

This device complies with Part 15 of the FCC Rules. Operation is subject to the following two conditions:
(1)This device may not cause harmful interference.
(2)This device must accept any interference received, including interference that may cause undesired operation.
2. Changes or modifications not expressly approved by the party responsible for compliance could void the user's authority to operate the equipment.
Note:This equipment has been tested and found to comply with the limits for a class B digital device,pursuant to Part 15 of the FCC Rules. These limits are designed to provide reasonable protection against harmful interference in a residential installation.
This equipment generates uses and can radiate radio frequence energy and,if not installed and used in accordance with the instructions,may cause harmful interference to radio communications.However,there is no guarantee that interference will not accor in a particular installation.if this equipmemt does cause harmful interference to radio or television reception,which can be determined by turning the equipment off and on,the user is encouraged to try to correct the interference by one or more of the following measures:

- Reorient or relocate the receiving antenna.
- Increase the separation between the equipment and receiver.
- Connect the equipment into an autlet on a circuit different from that to which the receiver is connectec.
- Consult the dealer or an experienced radio/TV technician for help.

This equipment complies with FCC radiation exposure limits set forth for an uncontrolled environment. This equipment should be installed and operated with minimum distance 20cm between the radiator & your body.

- --This device is acting as slave and operating in the 2.4 GHzband. Ad Hoc function is supported but not able to operate on non-US frequencies.
- Operation of this device is restricted to indoor use only.
- FCC ID:2ASWF-0411
- .