TOPFLYtech SolarX 110 Asset GPS Tracker

User Manual

20240222

Thanks for your purchasing of the high-quality GPS tracker from TOPFLYtech. Please read this user manual carefully before installation and operation. Information in this manual is the property of TOPFLYtech. Changes to the specifications and features in this manual may be made by TOPFLYtech without prior notice. No part of this manual could be reproduced, copied, translated, transmitted, or published in any form or by any means without TOPFLYtech's prior written permission.

SolarX 110

The tracker is using GNSS & LTE technologies and could collect device coordinates then transfer them via LTE network to the server. It provides customer with cost-effective, efficient and safety management. It has been widely used in commercial transportation, company vehicle fleet management, intelligent transportation, logistics, car rental, engineering machinery, marine transportation, animal/pet tracking and other segments.

Shenzhen TOPFLYtech Co., Limited. All Rights Reserved

Contents

1. QUICK REFERENCE 4

2. PRODUCT SPECIFICATIONS 6

3. LED INDICATOR 7

4. INSTALLATION GUIDE 7

4.1 SIM CARD PRE-INSTALLATION NOTE 7
4.2 SIM CARD INSTALLATION AND TRACKER POWER SWITCH 8
4.3 FIX SCREWS 8
4.4 INSTALLATION 9

5. CONTROL BUTTON WORK LOGIC 9

6. ALARM CONFIGURATION 9

6.1 ALARM SENT THROUGH NETWORK 9
6.2 ALARM SENT THROUGH SMS 10

7. QUICK TROUBLE SHOOTING 10

7.1 UNABLE TO CONNECT TO THE TRACKING PLATFORM 10
7.2 TRACKER SHOWS OFFLINE 10
7.3 UNABLE TO LOCATE 10
7.4 POSITION DRIFT 11
7.5 NO COMMAND REPLY 11

8. WARRANTY AND STOCK 11

9. FREQUENTLY USED COMMANDS 11

9.1 APN SETTING 11
9.2 SERVER SETTING 12
9.3 UPLOAD INTERVAL SETTING 12
9.4 HEARTBEAT SETTING 13
9.5 PIN SETTING 13
9.6 GOOGLE MAP SEARCH 13
9.7 FORGOT THE PIN 13

10. OPTIONAL ACCESSORIES LIST 14

11. FCC WARNING 16

12. ISEDC WARNING 16

1. Quick Reference

SolarX 110

Attention

i. SolarX 110 obtains power through sunlight to extend the battery life.

ii. Please make sure that the device is exposed to direct sunlight every day. This will be very useful to extend the battery life. If the device is not charged for more than three months, it may cause permanent damage to the internal battery.

iii. Please give the device a full charge before installation.

iv. Only when the solar panel output voltage value is 0.3V higher than device battery voltage value, the solar panel will start to charge the battery. Otherwise, the solar charging will stop.

v. To ensure the battery life for longer period, please be careful to set the reporting intervals. Lower reporting rates will maintain the balance between the power consumption and gaining (from solar panel). We usually recommend set the tracker reporting ⩾every 30 mins when ignition/motion on, and ⩾every 1 hour when ignition/motion off. Customer may contact TOPFLYtech for further advice.

Equipment power consumption and solar panel charging current

i. The normal device power consumption is around 50mAh when the device is in working mode without sleep.

ii. The typical charging rate of the solar panel under direct sunlight at noon (in summer) is about 80mAh (different sunlight illumination, different charging current).

Disclaimer

Before using this device, customers should fully understand their usage scenarios and installation environment. TOPFLYtech will not be responsible for any lost caused by using the device in a wrong scenario or reporting rate. It is highly recommended that customers should contact TOPFLYtech before deployment. We are glad to give suggestions.

Shenzhen TOPFLYtech Co., Limited. All Rights Reserved

Intelligent Power Management

To extend the battery life, we designed an intelligent power management algorithm. This algorithm allows the tracker working under a lower reporting rate when battery is low. Once the battery is charged back, the tracker will report as normal. This function is enabled in default. Customer can disable it by command. The detail working logic is:

- When the battery voltage value is down to 3.2V, tracker will send position message at every 24 hours no matter ignition (motion) on or off. Alarm (event) message will not be affected and sent out immediately regardless of whether the tracker is in this mode.

- When the battery is charged back to 3.4V, the device will report at its TIMER setting.

Battery Protection

The tracker has a charging threshold to avoid the battery overcharge. Only when the battery voltage is ≤3.95V, the battery charging will start once sunlight condition is met or the tracker is connected to external power through the cable. The charging will stop when the battery voltage reaches 4.05V or the sunlight condition isn't met or it's disconnected from external power, depending on which comes first.

FOTA (firmware over the air) Notification

TOPFLYtech is committed to providing clients with the best user experience. We are offering automatic firmware update feature for every device. This feature allows devices always having the latest version firmware. It can save clients the time and effort of updating firmware manually. Please note that this feature is enabled in default. If you want to turn it off, please contact with TOPFLYtech. If this feature is disabled, the fw update only can be done by sending upgrade command manually.

Shenzhen TOPFLYtech Co., Limited. All Rights Reserved

2. Product Specifications

Network Specifications	
Operating Band	LTE FDD Cat 1: B1/B2/B3/B4/B5/B7/B8/B12/B13/B17/B18/B19/B20/B25/B26/B28/B66 LTE TDD Cat 1: B34/B38/B39/B40/B41 GSM: 850/900/1800/1900 MHz
Data Transmission	LTE-FDD:Max.10Mbps (DL), Max.5Mbps (UL) LTE-TDD:Max.8.96Mbps(DL), Max.3.1Mbps (UL) GPRS: Max. 85.6Kbps (DL), Max. 85.6Kbps (UL)
GNSS Specifications	
GNSS Chipset	All-In-One GNSS Receiver
GNSS System	GPS + Glonass + Beidou + Galileo +QZSS
Receiver type:	47 tracking / 47 acquisitions- channel GNSS receive
Sensitivity	Acquisition: -147dBm Tracking: -166dBm Reacquisition: -159dBm
Horizontal Position Accuracy	Autonomous: < 2 m CEP
TTFF @ -130 dBm with (without) Easy	Cold start: <15S/28s Warm start: <25s/2s Hot start: <1s/1s
Interfaces	
Charging and Data Transmission	Type-C connector
Network, GNSS Antenna	Internal only
LED Indicator	Network, GNSS and Battery
Touch button	For Power On and Off
FOTA	Yes
Hall Switch	For Remove Alert (Disabled in default, needs to be enabled manually)
Temperature Sensor	Built-in Temperature sensor
BLE 5.3	Yes
WiFi	2.4 GHz 802.11b (Rx)
Sim Card	Nano Sim Card
Tracker Configuring	Type-C Connector
General Specifications	
Waterproof	IP67
Dimensions	88mm*60.4mm*30.7mm (3.46" *2.38" *1.21")
Weight	150g (5.3oz)
Battery	Rechargeable Li-Polymer 2500 mAh/ 3.6V

Shenzhen TOPFLYtech Co., Limited. All Rights Reserved

Standby Time (Without solar charging, 2 hours active tracking per day and report every 2 hours when standing still)	30 minutes reporting: 100 Days 5 minutes reporting: 45 Days
Charging & Data Communication	Type-C cable (A to C and C to C) (Recommend using 5V 1A adaptor, 5 hours charging)
Operating Temperature	-30℃ ~ +80℃ (-22°F ~ 176°F)
Mounting	Magnet/Screw/Double-sided tape
Air Interface Protocol	
Transmit Protocol	TCP, UDP, MQTT, SMS
Data Security & Encryption Option	MD5/ AES128
BLE Accessory Support	Yes
Scheduled Timing/angle/distance Report	Report position and status at preset intervals
Geo-fence	Support up to 64 internal Geo-fence regions
Alarms	Support up to 31 types of alarm (Refer **6. Alarm Configuration**)
Industry Certifications	
FCC, PTCRB, AT&T, US Cellular, T-Mobile	

3. LED Indicator

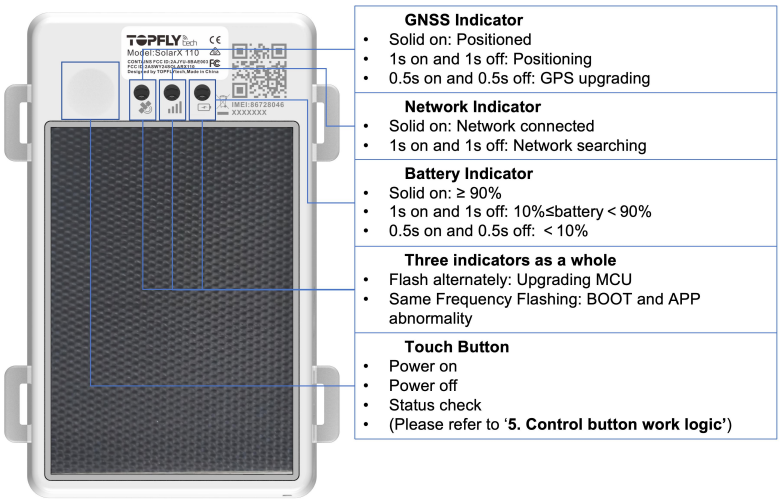

Note: Indicator lights will go out automatically after the tracker turns on for 70 seconds without connecting to the external power via Type-C cable.

4. Installation Guide

4.1 SIM card pre-installation note

4.1.1 SIM card data service should be enabled.

4.1.2 If SIM card is locked via PIN, please unlock it first.

4.1.3 Ensure there is sufficient balance in the SIM card.

4.2 SIM card installation

4.2.1 Open the tracker SIM card slot cover with the screwdriver.

4.2.2 Insert the SIM card with a little push.

4.2.3 Put the cover back and use screwdriver to fix the cover tightly.

4.3 Fix Screws

4.3.1 It is **VERY IMPORTANT** to fix the 2 SIM card cover screws to prevent water from leaking inside and cause damage to device.

Please note that, the structures on different sides of the cover are different. Therefore, please follow the below photos, to make sure the area highlighted in red toward the notch reserved for the device, and then tighten the screws after ensuring that it is fully covered.

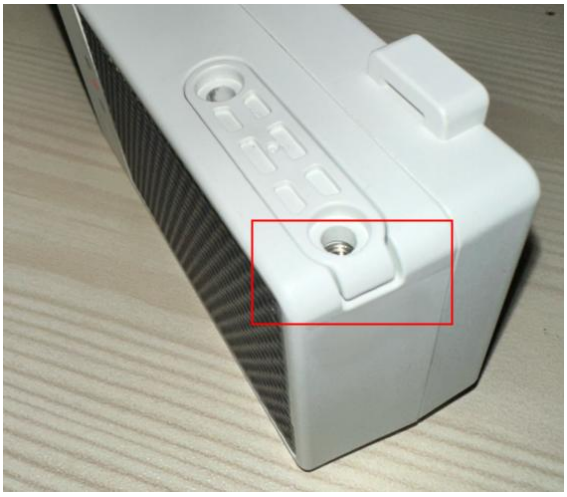

4.3.2 Final check, please ensure the cover/lid is fully covered and screws tightened.

4.4 Installation

Away from emission source such as all kinds of sensors, burglar alarm and other communication devices.

5. Control button work logic

Power on (default enable)	● Hold on the button more than 6 seconds, device will be powered on and all LED start to work ● Other method to power on: USB connect.
Status Check (default enable)	When device is in power on status, click the button for 5 times in a row (each interval is less than 1 second), device's LED will work 100 seconds and indicate GNSS, Network, and Battery status. For details, please refer to '**3. LED Indicator**'.
Power off (default enable)	Click the button for 9 times in a row (each interval is less than 1 second), and the ninth time should be holding the button for more than 3 seconds, the LED lights will be solid on for 3 seconds then device power off.

6. Alarm Configuration

6.1 Alarm sent through network

6.1.1 alarm_set,0000,a,b,0,0,#

6.1.2 0000 is device default PIN

6.1.3 a=alarm code, value from 1 to 31

Shenzhen TOPFLYtech Co., Limited. All Rights Reserved

Alarm Code	Description	Alarm Code	Description
1	Device removal (VS alarm 21)	20	Device power on (VS alarm 29)
6	Low battery (VS alarm 7)	21	Device mounted
7	Battery recover	25	Device high temperature disappear
8	Device high temperature (VS alarm 25)	26	Vibration stop
9	Vibration start (VS alarm 26)	29	Device power off
12	Type-C cable connected (VS alarm 13)	30	Device low temperature (VS alarm 31)
13	Type-C cable disconnected	31	Device low temperature disappear
14	Enter geofence (VS alarm 15)	70	High speed (VS alarm 71)
15	Leave geofence	71	High speed recover
16	Start moving (VS alarm 17)	74	Requesting current location
17	Stop moving		

6.1.4 b=enable or disable, value is 0 (disable) or 1 (enable)

6.2 Alarm sent through SMS

Alarm also can be sent through SMS. But the tracker SIM card must support SMS function first. Then it needs customer set manager cellphone number. Please refer the frequently used commands part to get further information. Related commands: managera, managerd, manager.

7. Quick Trouble Shooting

7.1 Unable to Connect to the Tracking Platform

7.1.1 Check the APN and IP settings.

7.1.2 Check the SIM card data service whether enabled.

7.1.3 Make sure there is no limitation or already added server IP to the SIM card IP whitelist when using a M2M SIM card.

7.1.4 Check the balance/data of the SIM card.

7.2 Tracker Shows Offline

7.2.1 Check the battery remaining power

7.2.2 Check if the device entered into network blind area.

7.2.3 Check the SIM card balance.

7.2.4 If the connection lost happens on the last several days of the month, check whether the network service is terminated by carrier because of exceeding the max data usage volume.

7.3 Unable to Locate

7.3.1 The device may shield by metallic things.

7.3.2 The device may enter into an area with no satellite signal coverage. (Underground, building, etc)

Shenzhen TOPFLYtech Co., Limited. All Rights Reserved

7.4 Position Drift

In an area with poor GNSS signal (like the areas with lots of high buildings), position drift may happen. When the device moves to open area, the drift will no longer exist.

7.5 No Command Reply

7.5.1 Check the command format. Make sure it's correct.

7.5.2 The device may be in network blind area.

7.5.3 Ensure the SIM card is properly inserted.

8. Warranty and Stock

The device standard warranty period is 12 months starting from the date of purchasing. If the device will be stored for a long time, please connect it to the external power and recharge the internal battery (5 hours) every 3 months. It will be helpful to extend the internal battery life.

9. Frequently Used Commands

Commands are not case-sensitive and can be sent via mobile phone. The content is separated by comma and ends with #. When set successfully, the tracker will return OK and execute it. Otherwise, there will be no message returned.

Function	Command Format
APN Setting	**APN,***Current PIN,APN Name,Username,Password***#**
Server Setting	**IP,***Current PIN,Server Domain Name or IP,Port Number***#**
Upload Interval Setting	**TIMER,***Current PIN,Upload Time(ACC on):Upload Time(ACC off):Angle Compensation:Distance Compensation***#**
Heartbeat Setting	**HBT,***Current PIN,Heartbeat Interval***#**
PIN Setting	**PASSWORD,***Current PIN,New PIN***#**
Google Map Search	**GOOGLE,***Current PIN***#**
Forgot the PIN	**MYSELF#**

9.1 APN Setting

APN,*Current PIN,APN Name,Username,Password#*

APN Name:

Range: APN of service provider

Length Limit: 1~32

Username:

Range: Letters and Numerals

Length Limit: 0~32

Password:

Range: Letters and Numerals

Length Limit: 0~32

Note:

1) Tracker will return "SET APN OK" when received this command.
2) If there is no Username and Password, the SMS setting is:
   APN,Current PIN,APN Name,,#
3) If there is no APN PIN, the SMS setting is:
   APN,Current PIN,APN Name,Username,#

9.2 Server Setting

IP,*Current PIN,Server Domain Name or IP,Port Number#*

Server Domain Name or IP:

Range: Letters, Numerals and Symbols

Length Limit: 1~128

Port Number:

Range: Positive Integer

Length Limit: 0~65535

Note: Tracker will return "SET IP OK" when received this command.

9.3 Upload Interval Setting

TIMER,*Current PIN,Upload Time(ACC on):Upload Time(ACC off):Angle Compensation: Distance Compensation#*

Upload Time (ACC on):

Range: Positive Integer

Range Limit: 0, 300~65535 second

Upload Time (ACC off):

Range: Positive Integer

Range Limit: 0, 1800~ 4294967295 second

Angle Compensation:

Range: Positive Integer

Range Limit: 0~90 degrees

Distance Compensation:

Range: Positive Integer

Range Limit: 0 ~ 65535 meters

Shenzhen TOPFLYtech Co., Limited. All Rights Reserved

Note: Tracker will return "SET TIMER OK" when received this command.

9.4 Heartbeat Setting

HBT,*Current PIN,Heartbeat Interval#*

Heartbeat Interval:

Range: Positive Integer

Range Limit: 1 ~ 255 minutes

Default: 30 minutes

Note: Tracker will return "SET HBT OK" when received this command.

9.5 PIN Setting

PASSWORD,*Current PIN,New PIN#*

PIN:

Range: Letters and Numerals

Length Limit: 1 ~ 10

Default: 0000

Note: Tracker will return "SET PASSWORD OK" when received this command.

9.6 Google Map Search

GOOGLE,*Current PIN#*

Note: Tracker will return below message when received this command.

http://maps.google.com/maps?q=<Latitude>, <Longitude>

9.7 Forgot the PIN

MYSELF#

Note:

1) If the manager phone number has been set, only the manager can use "MYSELF#". If no manager setting, the tracker will return the IMEI and current PIN when it received "MYSELF#" from any mobile phone.
2) This command can be used to retrieve password.

Shenzhen TOPFLYtech Co., Limited. All Rights Reserved

10. Optional Accessories List

Product Sku	Description	Photo for Reference
TA59	SolarX 110 bracket (stainless steel) with 2 mounting screws	
TA60	Magnet Set (2 units) for SolarX 110 bracket with 2 mounting screws and (If use magnet installation method, it will not support remove alert function)	
TA63	Double-sided tape for SolarX 110 bracket	
TSTH1-B	BLE 5.0 Wireless Temperature and Humidity Sensor	
TSDT1-B	BLE 5.0 Wireless Door and Temperature Sensor	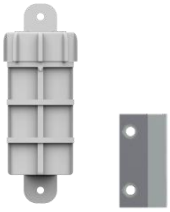
TSR1-B	BLE 5.0 Wireless Relay	
T-button	BLE 5.1 Key Fob & Panic button	

Shenzhen TOPFLYtech Co., Limited. All Rights Reserved

T-sense	BLE 5.1 IP67 temp&movement&door sensor	
T-hub	BLE 5.1 IO extension hub	
T-one	BLE 5.1 Probe temp or temp&humi sensor extender	
TA51	Torque Adjustable Hand Screwdriver	

Shenzhen TOPFLYtech Co., Limited. All Rights Reserved

11. FCC Warning

This equipment has been tested and found to comply with the limits for a Class B digital device, pursuant to part 15 of the FCC Rules. These limits are designed to provide reasonable protection against harmful interference in a residential installation. This equipment generates, uses and can radiate radio frequency energy and, if not installed and used in accordance with the instructions, may cause harmful interference to radio communications. However, there is no guarantee that interference will not occur in a particular installation. If this equipment does cause harmful interference to radio or television reception, which can be determined by turning the equipment off and on, the user is encouraged to try to correct the interference by one or more of the following measures:

—Reorient or relocate the receiving antenna.

—Increase the separation between the equipment and receiver.

—Connect the equipment into an outlet on a circuit different from that to which the receiver is connected.

—Consult the dealer or an experienced radio/TV technician for help.

This device complies with Part 15 of the FCC Rules. Operation is subject to the following two conditions:

(1) this device may not cause harmful interference, and

(2) this device must accept any interference received, including interference that may cause undesired operation

Caution!

Any changes or modifications not expressly approved by the party responsible for compliance could void the user's authority to operate the equipment.

IMPORTANT NOTICE:

FCC Radiation Exposure Statement

This equipment complies with FCC radiation exposure limits set forth for an uncontrolled environment. This equipment should be installed and operated with minimum distance 20 cm between the radiator and your body.

12. ISEDC Warning

This device complies with Innovation, Science, and Economic Development Canada licence-exempt RSS standard(s). Operation is subject to the following two conditions:

(1) this device may not cause interference, and

(2) this device must accept any interference, including interference that may cause undesired operation of the device.

Le présent appareil est conforme aux CNR d' Innovation, Sciences et Développement économique Canada applicables aux appareils radio exempts de licence. L'exploitation est autorisée aux deux conditions suivantes :

(1) l'appareil nedoit pas produire de brouillage, et

(2) l'utilisateur de l'appareil doit accepter tout brouillage radioélectrique subi, même si le

brouillage est susceptible d'en compromettre le fonctionnement.

The device is compliance with RF exposure guidelines, users can obtain Canadian information on RF exposure and compliance.The minimum distance from body to use the device is 20cm.

Le présent appareil est conforme Après examen de ce matériel aux conformité ou aux limites d'intensité de champ RF, les utilisateurs peuvent sur l'exposition aux radiofréquences et la conformité and compliance d'acquérir les informations correspondantes. La distance minimale du corps à utiliser le dispositif est de 20cm.

Shenzhen TOPFLYtech Co., Limited. All Rights Reserved