RF Exposure report

The following samples were submitted and identified on behalf of the client as:

Product Name	SyncUP Kids Watch V2
Brand Name	T-Mobile
Model No.	TMUS-SKW-2
Applicant	T-mobile Usa, Inc. 12920 Se 38th Street, Bellevue, Washington, United States, 98006.
Standards	IEEE/ANSI C95.1-1992, IEEE 1528-2013
FCC ID	2ASXC-TMO-SKW-02
Date of EUT Receipt	Mar. 18, 2024
Date of Test(s)	Mar. 20, 2024 ~ Apr. 16, 2024
Date of Issue	Apr. 30, 2024

In the configuration tested, the EUT complied with the standards specified above.

Remarks:

This report details the results of the testing carried out on one sample, the results contained in this test report do not relate to other samples of the same product. The manufacturer should ensure that all products in series production are in conformity with the product sample detailed in this report.

This report may only be reproduced and distributed in full. If the product in this report is used in any configuration other than that detailed in the report, the manufacturer must ensure the new system complies with all relevant standards. Any mention of SGS Taiwan Ltd. Central RF Lab or testing done by SGS Taiwan Ltd. Central RF Lab in connection with distribution or use of the product described in this report must be approved by SGS Taiwan Ltd. Central RF Lab in writing.

Signed on behalf of SGS

Clerk / Kimmy Chiou	PM / Kiki Lin	Approved By / John Yeh
Kimmy Chiou	Kiki Lin	John Yeh

Date: Apr. 30, 2024

Unless otherwise stated the results shown in this test report refer only to the sample(s) tested and such sample(s) are retained for 90 days only.
除非另有說明，此報告結果僅對測試之樣品負責，同時此樣品僅保留90天。本報告未經本公司書面許可，不可部份複製。
This document is issued by the Company subject to its General Conditions of Service printed overleaf, available on request or accessible at http://www.sgs.com.tw/Terms-and-Conditions and for electronic format documents, subject to Terms and Conditions for Electronic Documents at http://www.sgs.com.tw/Terms-and-Conditions. Attention is drawn to the limitation of liability, indemnification and jurisdiction issues defined therein. Any holder of this document is advised that information contained hereon reflects the Company's findings at the time of its intervention only and within the limits of Client's instructions, if any. The Company's sole responsibility is to its Client and this document does not exonerate parties to a transaction from exercising all their rights and obligations under the transaction documents. This document cannot be reproduced except in full, without prior written approval of the Company. Any unauthorized alteration, forgery or falsification of the content or appearance of this document is unlawful and offenders may be prosecuted to the fullest extent of the law.

Revision History

Report Number	Revision	Description	Issue Date	Revised By	Remark
TESA2402000084ES	00	Initial creation of document	Apr. 25, 2024	Kimmy Chiou	
TESA2402000084ES	01	Modify product name	Apr. 30, 2024	Kimmy Chiou	*

Note:

1. The mark " * " is the revised version of the report due to comments submitted by the certification.
2. Variant information of main and 2nd source is provided by the applicant, test results of this report are applicable to the sample EUT(s) received.

Unless otherwise stated the results shown in this test report refer only to the sample(s) tested and such sample(s) are retained for 90 days only.
除非另有說明，此報告結果僅對測試之樣品負責，同時此樣品僅保留90天。本報告未經本公司書面許可，不可部份複製。
This document is issued by the Company subject to its General Conditions of Service printed overleaf, available on request or accessible at http://www.sgs.com.tw/Terms-and-Conditions and for electronic format documents, subject to Terms and Conditions for Electronic Documents at http://www.sgs.com.tw/Terms-and-Conditions. Attention is drawn to the limitation of liability, indemnification and jurisdiction issues defined therein. Any holder of this document is advised that information contained hereon reflects the Company's findings at the time of its intervention only and within the limits of Client's instructions, if any. The Company's sole responsibility is to its Client and this document does not exonerate parties to a transaction from exercising all their rights and obligations under the transaction documents. This document cannot be reproduced except in full, without prior written approval of the Company. Any unauthorized alteration, forgery or falsification of the content or appearance of this document is unlawful and offenders may be prosecuted to the fullest extent of the law.

Contents

1 GENERAL INFORMATION 4
1.1 Test Methodology 4
1.2 Description of EUT 5
1.3 Maximum value 7
2 MEASUREMENT SYSTEM 8
2.1 Test Facility 8
2.2 SAR System 9
3 SAR SYSTEM VERIFICATION 12
3.1 Tissue Simulating Liquid 12
3.2 Tissue Simulant Liquid measurement 12
3.3 Measurement results of Tissue Simulant Liquid 13
3.4 The composition of the tissue simulating liquid: 14
3.5 System check 14
3.6 System check results 15
4 TEST CONFIGURATIONS 16
4.1 Test Environment 16
4.2 Test Note 16
4.3 Test position 18
4.4 Test limit 19
5 MAXIMUM OUTPUT POWER 22
5.1 FDD LTE 22
5.2 WLAN 35
5.3 Bluetooth 35
5.4 BLE 36
6 DUTY CYCLE 37
7 SUMMARY OF RESULTS 38
7.1 Decision rules 38
7.2 Summary of SAR Results 38
7.3 Reporting statements of conformity 40
7.4 Conclusion 40
8 SIMULTANEOUS TRANSMISSION ANALYSIS 41
8.1 Simultaneous Transmission Scenarios: 41
8.2 Estimated SAR calculation 41
8.3 SPLSR evaluation and analysis 41
8.4 Conclusion 42
9 INSTRUMENTS LIST 43
10 UNCERTAINTY BUDGET 44
11 SAR MEASUREMENT RESULTS 45
12 SAR SYSTEM CHECK RESULTS 59
13 APPENDIXES 67
13.1 SAR_Appendix A Photographs 67
13.2 SAR_Appendix B DAE & Probe Cal. Certificate 67
13.3 SAR_Appendix C Phantom Description & Dipole Cal. Certificate 67

Unless otherwise stated the results shown in this test report refer only to the sample(s) tested and such sample(s) are retained for 90 days only.
除非另有說明，此報告結果僅對測試之樣品負責，同時此樣品僅保留90天。本報告未經本公司書面許可，不可部份複製。
This document is issued by the Company subject to its General Conditions of Service printed overleaf, available on request or accessible at http://www.sgs.com.tw/Terms-and-Conditions and for electronic format documents, subject to Terms and Conditions for Electronic Documents at http://www.sgs.com.tw/Terms-and-Conditions. Attention is drawn to the limitation of liability, indemnification and jurisdiction issues defined therein. Any holder of this document is advised that information contained hereon reflects the Company's findings at the time of its intervention only and within the limits of Client's instructions, if any. The Company's sole responsibility is to its Client and this document does not exonerate parties to a transaction from exercising all their rights and obligations under the transaction documents. This document cannot be reproduced except in full, without prior written approval of the Company. Any unauthorized alteration, forgery or falsification of the content or appearance of this document is unlawful and offenders may be prosecuted to the fullest extent of the law.

1 GENERAL INFORMATION

1.1 Test Methodology

The SAR testing method and procedure for this device is in accordance with the following standards:
IEEE/ANSI C95.1-1992
IEEE 1528-2013
KDB447498D01v06
KDB865664D01v01r04
KDB865664D02v01r02
KDB941225D05v02r05
KDB248227D01v02r01

Unless otherwise stated the results shown in this test report refer only to the sample(s) tested and such sample(s) are retained for 90 days only.
除非另有說明，此報告結果僅對測試之樣品負責，同時此樣品僅保留90天。本報告未經本公司書面許可，不可部份複製。
This document is issued by the Company subject to its General Conditions of Service printed overleaf, available on request or accessible at http://www.sgs.com.tw/Terms-and-Conditions and for electronic format documents, subject to Terms and Conditions for Electronic Documents at http://www.sgs.com.tw/Terms-and-Conditions. Attention is drawn to the limitation of liability, indemnification and jurisdiction issues defined therein. Any holder of this document is advised that information contained hereon reflects the Company's findings at the time of its intervention only and within the limits of Client's instructions, if any. The Company's sole responsibility is to its Client and this document does not exonerate parties to a transaction from exercising all their rights and obligations under the transaction documents. This document cannot be reproduced except in full, without prior written approval of the Company. Any unauthorized alteration, forgery or falsification of the content or appearance of this document is unlawful and offenders may be prosecuted to the fullest extent of the law.

1.2 Description of EUT

Product Name	SyncUP Kids Watch V2	
Brand Name	T-Mobile	
Model No.	TMUS-SKW-2	
FCC ID	2ASXC-TMO-SKW-02	
Duty Cycle	LTE FDD	1
	WLAN802.11	Please refer to section 6
	Bluetooth	Please refer to section 6
Supported radios (TX Frequency Range, MHz)	LTE FDD Band 2	1850-1910
	LTE FDD Band 4	1710-1755
	LTE FDD Band 12	699-716
	LTE FDD Band 66	1710-1780
	LTE FDD Band 71	663-698
	802.11 b/g/n	2.4GHz (2412.0 – 2462.0 MHz)
	Bluetooth 4.2	2.4GHz (2400.0 – 2483.5 MHz)

Unless otherwise stated the results shown in this test report refer only to the sample(s) tested and such sample(s) are retained for 90 days only.
除非另有說明，此報告結果僅對測試之樣品負責，同時此樣品僅保留90天。本報告未經本公司書面許可，不可部份複製。
This document is issued by the Company subject to its General Conditions of Service printed overleaf, available on request or accessible at http://www.sgs.com.tw/Terms-and-Conditions and for electronic format documents, subject to Terms and Conditions for Electronic Documents at http://www.sgs.com.tw/Terms-and-Conditions. Attention is drawn to the limitation of liability, indemnification and jurisdiction issues defined therein. Any holder of this document is advised that information contained hereon reflects the Company's findings at the time of its intervention only and within the limits of Client's instructions, if any. The Company's sole responsibility is to its Client and this document does not exonerate parties to a transaction from exercising all their rights and obligations under the transaction documents. This document cannot be reproduced except in full, without prior written approval of the Company. Any unauthorized alteration, forgery or falsification of the content or appearance of this document is unlawful and offenders may be prosecuted to the fullest extent of the law.

USB Cable (Data Cable) 1	Model No.: KCA-ET-5-0329	Supplier: KSD CO., LTD
USB Cable (Data Cable) 2	Model No.: WJE240010B	Supplier: GREATLAND ELECTRONICS TAIWAN LTD
PCB 1	Model No.: QNT0733	Supplier: AT&S(China)Co., LTD
PCB 2	Model No.: 6590409-G00-0T	Supplier: COMPEQ MANUFACTURING CO.,LTD.
Memory 1	Model No.: FAPEA3216-58C2930	Supplier: Longsys Electronics Co., Ltd.
Memory 2	Model No.: 32CP16-M4MTC2W-GA68	Supplier: KINGSTON TECHNOLOGY COMPANY
B71 Duplexer 1	Model No.: B39681B1266P810	Supplier: RF360 Europe GmbH
B71 Duplexer 2	Model No.: SAYRH634MBA0C0A	Supplier: MURATA
A+G sensor 1	Model No.: LSM6DSOWTR	Supplier: STMicroelectronics
A+G sensor 2	Model No.: ICM-42607-P	Supplier: TDK TAIWAN CORP.TDK XIAMEN CO.,LTD
Crystal for PMIC 1	Model No.: EXS00A-CS12755	Supplier: Nihon Dempa Kogyo Co., Ltd.
Crystal for PMIC 2	Model No.: OW38470002	Supplier: TAIWAN X'TAL CORPATION
Barometer 1	Model No.: LPS22DFTR	Supplier: STMicroelectronics
Barometer 2	Model No.: ICP-20100	Supplier: TDK TAIWAN CORP.TDK XIAMEN CO.,LTD
Display 1	Model No.: TA014XVHM52-00	Supplier: Tianma Micro-Electronics CO., LTD.
Display 2	Model No.: ONO-0141C40719	Supplier: Truly Semiconductors Ltd.
Speaker 1	Model No.: MS07-015008-002H	Supplier: Luxshare Precision Limited
Speaker 2	Model No.: KDSG150808C-08PF	Supplier: KINGSTATE ELECTRONICS

Unless otherwise stated the results shown in this test report refer only to the sample(s) tested and such sample(s) are retained for 90 days only.
除非另有說明，此報告結果僅對測試之樣品負責，同時此樣品僅保留90天。本報告未經本公司書面許可，不可部份複製。
This document is issued by the Company subject to its General Conditions of Service printed overleaf, available on request or accessible at http://www.sgs.com.tw/Terms-and-Conditions and for electronic format documents, subject to Terms and Conditions for Electronic Documents at http://www.sgs.com.tw/Terms-and-Conditions. Attention is drawn to the limitation of liability, indemnification and jurisdiction issues defined therein. Any holder of this document is advised that information contained hereon reflects the Company's findings at the time of its intervention only and within the limits of Client's instructions, if any. The Company's sole responsibility is to its Client and this document does not exonerate parties to a transaction from exercising all their rights and obligations under the transaction documents. This document cannot be reproduced except in full, without prior written approval of the Company. Any unauthorized alteration, forgery or falsification of the content or appearance of this document is unlawful and offenders may be prosecuted to the fullest extent of the law.

1.3 Maximum value

Next to mouth exposure (1g)

Summary of Maximum SAR Value	
Mode	Highest SAR 1g (W/kg)
WLAN 2.4GHz	0.51
Bluetooth(GFSK)	0.02
WWAN	1.05

Extremity exposure (10g)

Summary of Maximum SAR Value	
Mode	Highest SAR 10g (W/kg)
WLAN 2.4GHz	0.44
Bluetooth(GFSK)	0.13
WWAN	1.90

Unless otherwise stated the results shown in this test report refer only to the sample(s) tested and such sample(s) are retained for 90 days only.
除非另有說明，此報告結果僅對測試之樣品負責，同時此樣品僅保留90天。本報告未經本公司書面許可，不可部份複製。
This document is issued by the Company subject to its General Conditions of Service printed overleaf, available on request or accessible at http://www.sgs.com.tw/Terms-and-Conditions and for electronic format documents, subject to Terms and Conditions for Electronic Documents at http://www.sgs.com.tw/Terms-and-Conditions. Attention is drawn to the limitation of liability, indemnification and jurisdiction issues defined therein. Any holder of this document is advised that information contained hereon reflects the Company's findings at the time of its intervention only and within the limits of Client's instructions, if any. The Company's sole responsibility is to its Client and this document does not exonerate parties to a transaction from exercising all their rights and obligations under the transaction documents. This document cannot be reproduced except in full, without prior written approval of the Company. Any unauthorized alteration, forgery or falsification of the content or appearance of this document is unlawful and offenders may be prosecuted to the fullest extent of the law.

2 MEASUREMENT SYSTEM

2.1 Test Facility

Laboratory	Test Site Address	Test Site Name	FCC Designation number	IC CAB identifier
SGS Taiwan Ltd. Central RF Lab. (TAF code 3702)	1F, No. 8, Alley 15, Lane 120, Sec. 1, NeiHu Road, Neihu District, Taipei City, 11493, Taiwan.	SAR 2	TW0029	TW3702
		SAR 6		
		SAR 8		
	No. 2, Keji 1st Rd., Guishan Township, Taoyuan County, 33383, Taiwan	SAR 1	TW0028	
		SAR 4		
	No.134, Wu Kung Road, New Taipei Industrial Park, Wuku District, New Taipei City, Taiwan	**SAR 3**	TW0027	
		SAR 7		

Note: Test site name is remarked on the equipment list in each section of this report as an indication where measurements occurred in specific test site and address.

Unless otherwise stated the results shown in this test report refer only to the sample(s) tested and such sample(s) are retained for 90 days only.
除非另有說明，此報告結果僅對測試之樣品負責，同時此樣品僅保留90天。本報告未經本公司書面許可，不可部份複製。
This document is issued by the Company subject to its General Conditions of Service printed overleaf, available on request or accessible at http://www.sgs.com.tw/Terms-and-Conditions and for electronic format documents, subject to Terms and Conditions for Electronic Documents at http://www.sgs.com.tw/Terms-and-Conditions. Attention is drawn to the limitation of liability, indemnification and jurisdiction issues defined therein. Any holder of this document is advised that information contained hereon reflects the Company's findings at the time of its intervention only and within the limits of Client's instructions, if any. The Company's sole responsibility is to its Client and this document does not exonerate parties to a transaction from exercising all their rights and obligations under the transaction documents. This document cannot be reproduced except in full, without prior written approval of the Company. Any unauthorized alteration, forgery or falsification of the content or appearance of this document is unlawful and offenders may be prosecuted to the fullest extent of the law.

2.2 SAR System

Block Diagram (DASY5)

A block diagram of the SAR measurement System is given in below. This SAR measurement system uses a computer-controlled 3-D stepper motor system (SPEAG DASY 5 professional system). The model EX3DV4 field probe is used to determine the internal electric fields. The SAR can be obtained from the equation SAR= σ ($|Ei|^2$)/ ρ where σ and ρ are the conductivity and mass density of the tissue-simulant.

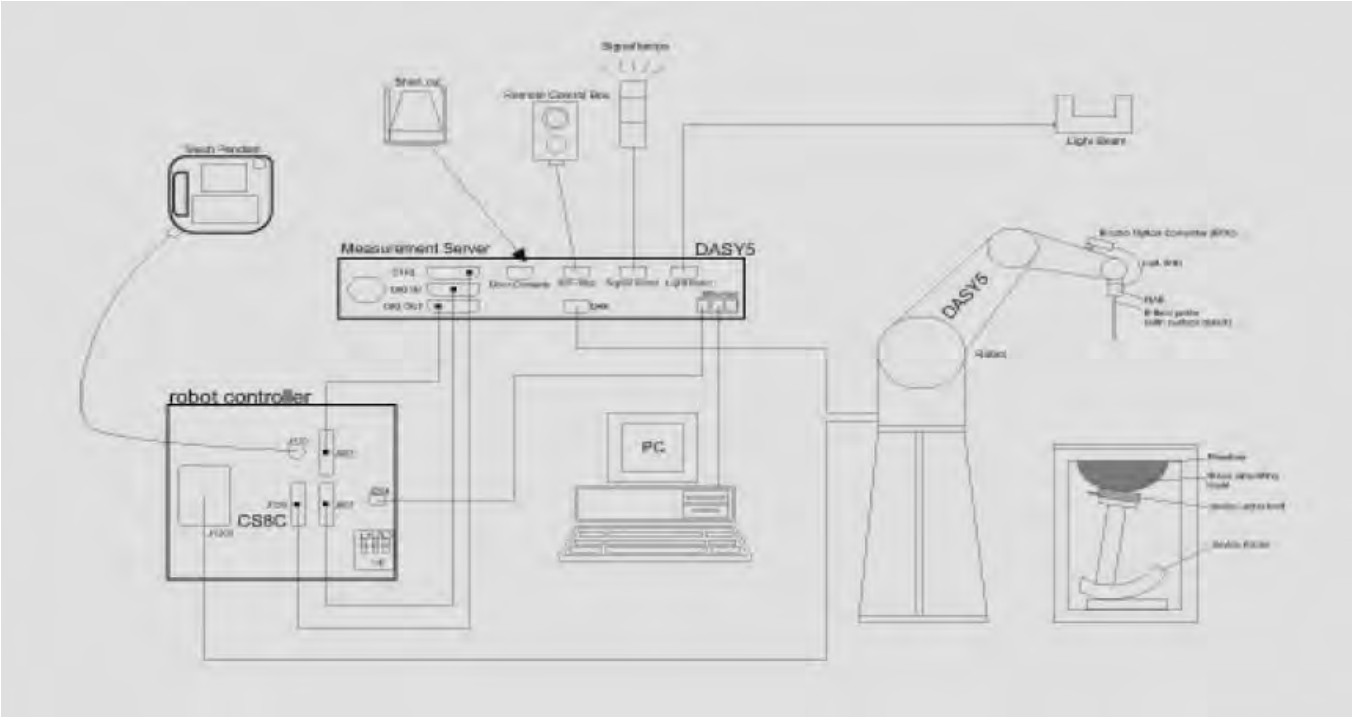

Unless otherwise stated the results shown in this test report refer only to the sample(s) tested and such sample(s) are retained for 90 days only.
除非另有說明，此報告結果僅對測試之樣品負責，同時此樣品僅保留90天。本報告未經本公司書面許可，不可部份複製。
This document is issued by the Company subject to its General Conditions of Service printed overleaf, available on request or accessible at http://www.sgs.com.tw/Terms-and-Conditions and for electronic format documents, subject to Terms and Conditions for Electronic Documents at http://www.sgs.com.tw/Terms-and-Conditions. Attention is drawn to the limitation of liability, indemnification and jurisdiction issues defined therein. Any holder of this document is advised that information contained hereon reflects the Company's findings at the time of its intervention only and within the limits of Client's instructions, if any. The Company's sole responsibility is to its Client and this document does not exonerate parties to a transaction from exercising all their rights and obligations under the transaction documents. This document cannot be reproduced except in full, without prior written approval of the Company. Any unauthorized alteration, forgery or falsification of the content or appearance of this document is unlawful and offenders may be prosecuted to the fullest extent of the law.

EX3DV4 E-Field Probe

Construction	Symmetrical design with triangular core Built-in shielding against static charges PEEK enclosure material (resistant to organic solvents, e.g., DGBE)	
Calibration	Basic Broad Band Calibration in air Conversion Factors (CF) for HSL 750/1750/1900/2450 MHz Additional CF for other liquids and frequencies upon request	
Frequency	10 MHz to > 6 GHz	
Directivity	± 0.3 dB in HSL (rotation around probe axis) ± 0.5 dB in tissue material (rotation normal to probe axis)	
Dynamic Range	10 µW/g to > 100 mW/g Linearity: ± 0.2 dB (noise: typically < 1 µW/g)	
Dimensions	Tip diameter: 2.5 mm	
Application	High precision dosimetric measurements in any exposure scenario (e.g., very strong gradient fields). Only probe which enables compliance testing for frequencies up to 6 GHz with precision of better 30%.	

Unless otherwise stated the results shown in this test report refer only to the sample(s) tested and such sample(s) are retained for 90 days only.
除非另有說明，此報告結果僅對測試之樣品負責，同時此樣品僅保留90天。本報告未經本公司書面許可，不可部份複製。
This document is issued by the Company subject to its General Conditions of Service printed overleaf, available on request or accessible at http://www.sgs.com.tw/Terms-and-Conditions and for electronic format documents, subject to Terms and Conditions for Electronic Documents at http://www.sgs.com.tw/Terms-and-Conditions. Attention is drawn to the limitation of liability, indemnification and jurisdiction issues defined therein. Any holder of this document is advised that information contained hereon reflects the Company's findings at the time of its intervention only and within the limits of Client's instructions, if any. The Company's sole responsibility is to its Client and this document does not exonerate parties to a transaction from exercising all their rights and obligations under the transaction documents. This document cannot be reproduced except in full, without prior written approval of the Company. Any unauthorized alteration, forgery or falsification of the content or appearance of this document is unlawful and offenders may be prosecuted to the fullest extent of the law.

PHANTOM (ELI)

Model	ELI	
Construction	The ELI phantom is used for compliance testing of handheld and body-mounted wireless devices in the frequency range of 30 MHz to 6 GHz. ELI is fully compatible with the IEC 62209-2 standard and all known tissue simulating liquids. ELI has been optimized regarding its performance and can be integrated into our standard phantom tables. A cover prevents evaporation of the liquid. Reference markings on the phantom allow installation of the complete setup, including all predefined phantom positions and measurement grids, by teaching three points. The phantom is compatible with all SPEAG dosimetric probes and dipoles.	
Shell Thickness	2 ± 0.2 mm	
Filling Volume	Approx. 30 liters	
Dimensions	Major axis: 600 mm Minor axis: 400 mm	

DEVICE HOLDER

Construction	The device holder (Supporter) for Notebook is made by POM (polyoxymethylene resin) , which is non-metal and non-conductive. The height can be adjusted to fit varies kind of notebooks.	 Device Holder

Unless otherwise stated the results shown in this test report refer only to the sample(s) tested and such sample(s) are retained for 90 days only.
除非另有說明，此報告結果僅對測試之樣品負責，同時此樣品僅保留90天。本報告未經本公司書面許可，不可部份複製。
This document is issued by the Company subject to its General Conditions of Service printed overleaf, available on request or accessible at http://www.sgs.com.tw/Terms-and-Conditions and for electronic format documents, subject to Terms and Conditions for Electronic Documents at http://www.sgs.com.tw/Terms-and-Conditions. Attention is drawn to the limitation of liability, indemnification and jurisdiction issues defined therein. Any holder of this document is advised that information contained hereon reflects the Company's findings at the time of its intervention only and within the limits of Client's instructions, if any. The Company's sole responsibility is to its Client and this document does not exonerate parties to a transaction from exercising all their rights and obligations under the transaction documents. This document cannot be reproduced except in full, without prior written approval of the Company. Any unauthorized alteration, forgery or falsification of the content or appearance of this document is unlawful and offenders may be prosecuted to the fullest extent of the law.

3 SAR SYSTEM VERIFICATION

3.1 Tissue Simulating Liquid

For the measurement of the field distribution inside the SAM phantom with DASY, the phantom must be filled with homogeneous tissue simulating liquid. For head SAR testing, the liquid height from the ear rint (ERP) of the phantom to the liquid top surface is larger than 15cm. For body SAR testing, the liquid height fromeference po the center of the flat phantom to the liquid top surface is larger than 15cm.

3.2 Tissue Simulant Liquid measurement

The dielectric properties for this Head-simulant fluid were measured by using the SPEAG Dielectric Assessment Kit (DAK-3.5)
All dielectric parameters of tissue simulates were measured within 24 hours of SAR measurements. The measured conductivity and permittivity are all within ± 5% of the target values.

Unless otherwise stated the results shown in this test report refer only to the sample(s) tested and such sample(s) are retained for 90 days only.
除非另有說明，此報告結果僅對測試之樣品負責，同時此樣品僅保留90天。本報告未經本公司書面許可，不可部份複製。
This document is issued by the Company subject to its General Conditions of Service printed overleaf, available on request or accessible at http://www.sgs.com.tw/Terms-and-Conditions and for electronic format documents, subject to Terms and Conditions for Electronic Documents at http://www.sgs.com.tw/Terms-and-Conditions. Attention is drawn to the limitation of liability, indemnification and jurisdiction issues defined therein. Any holder of this document is advised that information contained hereon reflects the Company's findings at the time of its intervention only and within the limits of Client's instructions, if any. The Company's sole responsibility is to its Client and this document does not exonerate parties to a transaction from exercising all their rights and obligations under the transaction documents. This document cannot be reproduced except in full, without prior written approval of the Company. Any unauthorized alteration, forgery or falsification of the content or appearance of this document is unlawful and offenders may be prosecuted to the fullest extent of the law.

3.3 Measurement results of Tissue Simulant Liquid

Measured Frequency (MHz)	Target Dielectric Constant, εr	Target Conductivity, σ (S/m)	Measured Dielectric Constant, εr	Measured Conductivity, σ (S/m)	% dev εr	% dev σ	Limit	Measurement Date
673	42.311	0.885	43.361	0.866	2.48%	-2.15%	± 5%	Apr. 10, 2024
680.5	42.271	0.885	43.297	0.873	2.43%	-1.36%	± 5%	
688	42.231	0.886	43.254	0.876	2.42%	-1.13%	± 5%	
704	42.145	0.887	43.159	0.892	2.41%	0.56%	± 5%	
707.5	42.127	0.887	43.152	0.902	2.43%	1.69%	± 5%	
711	42.108	0.887	43.121	0.903	2.41%	1.80%	± 5%	
750	41.900	0.890	42.899	0.905	2.38%	1.69%	± 5%	
1720	40.114	1.354	41.086	1.368	2.42%	1.03%	± 5%	
1732.5	40.096	1.361	41.071	1.372	2.43%	0.81%	± 5%	
1745	40.079	1.369	41.054	1.391	2.43%	1.61%	± 5%	
1750	40.071	1.371	41.029	1.395	2.39%	1.75%	± 5%	
1770	40.043	1.383	41.006	1.406	2.40%	1.66%	± 5%	
1860	40.000	1.400	40.984	1.432	2.46%	2.29%	± 5%	
1880	40.000	1.400	40.978	1.441	2.45%	2.93%	± 5%	
1900	40.000	1.400	40.957	1.447	2.39%	3.36%	± 5%	
2402	39.282	1.757	40.276	1.808	2.53%	2.90%	± 5%	Mar. 21, 2024
2412	39.265	1.766	40.225	1.822	2.44%	3.17%	± 5%	
2417	39.257	1.771	40.213	1.826	2.44%	3.11%	± 5%	
2437	39.222	1.788	40.209	1.828	2.52%	2.24%	± 5%	
2440	39.217	1.791	40.208	1.854	2.53%	3.52%	± 5%	
2441	39.215	1.792	40.186	1.857	2.48%	3.63%	± 5%	
2450	39.200	1.800	40.185	1.858	2.51%	3.22%	± 5%	
2457	39.191	1.807	40.175	1.863	2.51%	3.10%	± 5%	
2462	39.184	1.813	40.157	1.865	2.48%	2.87%	± 5%	
2480	39.160	1.832	40.127	1.882	2.47%	2.73%	± 5%	
680.5	42.271	0.885	43.042	0.856	1.82%	-3.28%	± 5%	Apr. 16, 2024
707.5	42.127	0.887	42.981	0.885	2.03%	-0.23%	± 5%	
750	41.900	0.890	42.815	0.895	2.18%	0.56%	± 5%	
1720	40.114	1.354	40.989	1.364	2.18%	0.74%	± 5%	
1732.5	40.096	1.361	40.933	1.390	2.09%	2.13%	± 5%	
1745	40.079	1.369	40.918	1.397	2.09%	2.05%	± 5%	
1750	40.071	1.371	40.836	1.415	1.91%	3.21%	± 5%	
1860	40.000	1.400	40.806	1.446	2.01%	3.29%	± 5%	
1900	40.000	1.400	40.786	1.450	1.96%	3.57%	± 5%	
2402	39.282	1.757	40.173	1.801	2.27%	2.50%	± 5%	
2450	39.200	1.800	39.983	1.847	2.00%	2.61%	± 5%	
2462	39.184	1.813	39.954	1.867	1.97%	2.98%	± 5%	

Unless otherwise stated the results shown in this test report refer only to the sample(s) tested and such sample(s) are retained for 90 days only.
除非另有說明，此報告結果僅對測試之樣品負責，同時此樣品僅保留90天。本報告未經本公司書面許可，不可部份複製。
This document is issued by the Company subject to its General Conditions of Service printed overleaf, available on request or accessible at http://www.sgs.com.tw/Terms-and-Conditions and for electronic format documents, subject to Terms and Conditions for Electronic Documents at http://www.sgs.com.tw/Terms-and-Conditions. Attention is drawn to the limitation of liability, indemnification and jurisdiction issues defined therein. Any holder of this document is advised that information contained hereon reflects the Company's findings at the time of its intervention only and within the limits of Client's instructions, if any. The Company's sole responsibility is to its Client and this document does not exonerate parties to a transaction from exercising all their rights and obligations under the transaction documents. This document cannot be reproduced except in full, without prior written approval of the Company. Any unauthorized alteration, forgery or falsification of the content or appearance of this document is unlawful and offenders may be prosecuted to the fullest extent of the law.

3.4 The composition of the tissue simulating liquid:

Simulating Liquids for 600 MHz -10 GHz, Manufactured by SPEAG:

Broad-band head tissue simulating liquids	SPEAG Product	Frequency range (MHz)	Main Ingredients
	HBBL600-10000V6	600 - 10000	Water, Oil

3.5 System check

The microwave circuit arrangement for system check is sketched in below. The daily system accuracy verification occurs within the flat section of the SAM phantom and ELI phantom. A SAR measurement was performed to see if the measured SAR was within +/- 10% from the target SAR values.

The tests were conducted on the same days as the measurement of the DUT. The obtained results from the system accuracy verification are displayed with SAR values normalized to 1W forward power delivered to the dipole.

During the tests, the liquid depth from the center of the flat phantom to the liquid top surface was 15 cm above in all the cases. It is seen that the system is operating within its specification, as the results are within acceptable tolerance of the reference values.

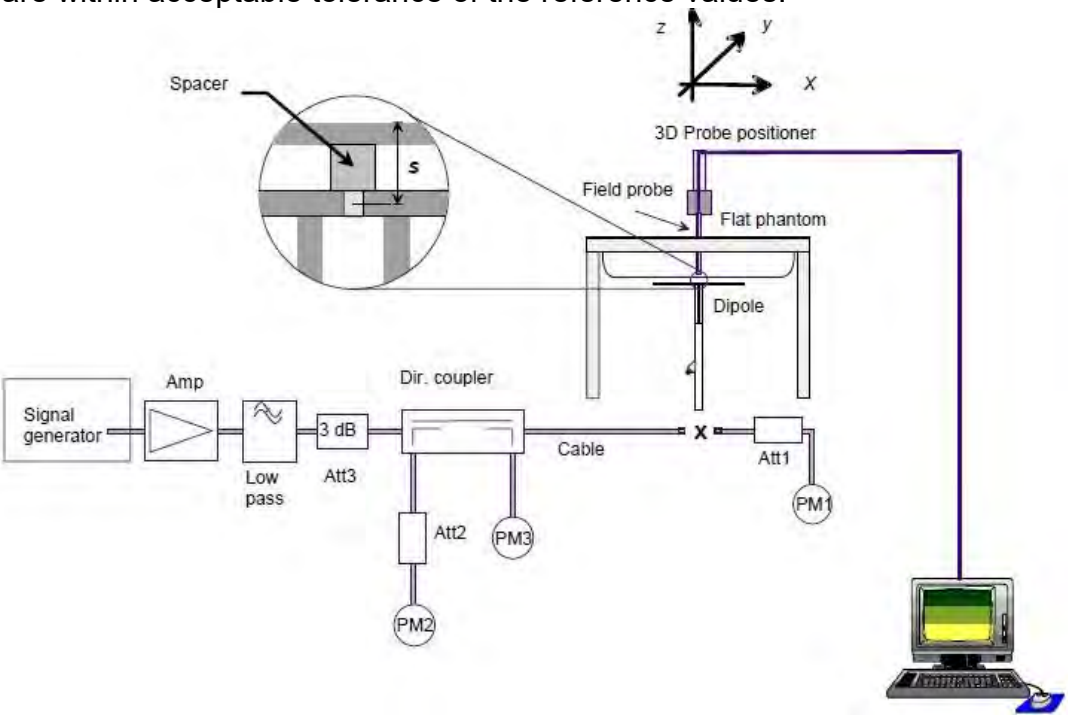

The block diagram of system check

Unless otherwise stated the results shown in this test report refer only to the sample(s) tested and such sample(s) are retained for 90 days only.
除非另有說明，此報告結果僅對測試之樣品負責，同時此樣品僅保留90天。本報告未經本公司書面許可，不可部份複製。
This document is issued by the Company subject to its General Conditions of Service printed overleaf, available on request or accessible at http://www.sgs.com.tw/Terms-and-Conditions and for electronic format documents, subject to Terms and Conditions for Electronic Documents at http://www.sgs.com.tw/Terms-and-Conditions. Attention is drawn to the limitation of liability, indemnification and jurisdiction issues defined therein. Any holder of this document is advised that information contained hereon reflects the Company's findings at the time of its intervention only and within the limits of Client's instructions, if any. The Company's sole responsibility is to its Client and this document does not exonerate parties to a transaction from exercising all their rights and obligations under the transaction documents. This document cannot be reproduced except in full, without prior written approval of the Company. Any unauthorized alteration, forgery or falsification of the content or appearance of this document is unlawful and offenders may be prosecuted to the fullest extent of the law.

3.6 System check results

Validation Kit	S/N	Frequency (MHz)	1W Target 1g-SAR (W/kg)	pin=250mW Measured 1g-SAR (W/kg)	Normalized to 1W 1g-SAR (W/kg)	Deviation (%)	Limit	Measurement Date
D750V3	1015	750	8.63	2.18	8.72	1.04	± 10%	Apr.10,2024
D750V3	1015	750	8.63	2.12	8.48	-1.74	± 10%	Apr.16,2024
D1750V2	1008	1750	36.4	8.59	34.36	-5.60	± 10%	Apr.10,2024
D1750V2	1008	1750	36.4	8.6	34.4	-5.49	± 10%	Apr.16,2024
D1900V2	5d056	1900	40.5	9.55	38.2	-5.68	± 10%	Apr.10,2024
D1900V2	5d056	1900	40.5	9.53	38.12	-5.88	± 10%	Apr.16,2024

Validation Kit	S/N	Frequency (MHz)	1W Target 1g-SAR (W/kg)	pin=250mW Measured 1g-SAR (W/kg)	Normalized to 1W 1g-SAR (W/kg)	Deviation (%)	Limit	Measurement Date
D2450V2	728	2450	53.4	13.2	52.8	-1.12	± 10%	Mar.21,2024
D2450V2	728	2450	53.4	12.7	50.8	-4.87	± 10%	Apr.16,2024

Unless otherwise stated the results shown in this test report refer only to the sample(s) tested and such sample(s) are retained for 90 days only.
除非另有說明，此報告結果僅對測試之樣品負責，同時此樣品僅保留90天。本報告未經本公司書面許可，不可部份複製。
This document is issued by the Company subject to its General Conditions of Service printed overleaf, available on request or accessible at http://www.sgs.com.tw/Terms-and-Conditions and for electronic format documents, subject to Terms and Conditions for Electronic Documents at http://www.sgs.com.tw/Terms-and-Conditions. Attention is drawn to the limitation of liability, indemnification and jurisdiction issues defined therein. Any holder of this document is advised that information contained hereon reflects the Company's findings at the time of its intervention only and within the limits of Client's instructions, if any. The Company's sole responsibility is to its Client and this document does not exonerate parties to a transaction from exercising all their rights and obligations under the transaction documents. This document cannot be reproduced except in full, without prior written approval of the Company. Any unauthorized alteration, forgery or falsification of the content or appearance of this document is unlawful and offenders may be prosecuted to the fullest extent of the law.

4 TEST CONFIGURATIONS

4.1 Test Environment

Ambient Temperature: 22±2° C
Tissue Simulating Liquid: 22±2° C

4.2 Test Note

- **General:** Measurements are performed respectively on the lowest, middle and highest channels of the operating band(s).
- **General:** The EUT is set to maximum power level during all tests, and at the beginning of each test the battery is fully charged.
- **General:** During the SAR testing, the DASY system checks power drift by comparing the e-field strength of one specific location measured at the beginning with that measured at the end of the SAR testing.
- **General:** According to KDB447498D01v06, testing of other required channels is not required when the reported 1-g SAR for the highest output channel is ≤ 0.8 W/kg, when the transmission band is ≤ 100 MHz.
- **General:** According to KDB865664D01v01r04, SAR measurement variability must be assessed for each frequency band. When the original highest measured SAR is ≥ 0.8 W/kg, repeated that measurement once. Perform a second repeated measurement only if the ratio of largest to smallest SAR for the original and first repeated measurements is > 1.20 or when the original or repeated measurement is ≥ 1.45 W/kg (~ 10% from the 1-g SAR limit).
- **LTE:** LTE modes test according to **KDB 941225D05v02r05.**

a. Per Section 5.2.1, the largest channel bandwidth and measure SAR for QPSK with 1 RB allocation.

- Using the RB offset and required test channel combination with the highest maximum output power for RB offsets at the upper edge, middle and lower edge of each required test channel.
- When the reported SAR is ≤ 0.8 W/kg, testing of the remaining RB offset configurations and required test channels is not required for 1 RB allocation; otherwise, SAR is required for the remaining required test channels and only for the RB offset configuration with the highest output power for that channel.
- When the reported SAR of a required test channel is > 1.45 W/kg, SAR is required for all three RB offset configurations for that required test channel.

b. Per Section 5.2.2, the largest channel bandwidth and measure SAR for QPSK with 50% RB allocation

- The procedures required for 1 RB allocation in 5.2.1 are applied to measure the SAR for QPSK with 50% RB allocation.

c. Per Section 5.2.3, the largest channel bandwidth and measure SAR for QPSK with 100% RB allocation

- For QPSK with 100% RB allocation, SAR is not required when the highest

Unless otherwise stated the results shown in this test report refer only to the sample(s) tested and such sample(s) are retained for 90 days only.
除非另有說明，此報告結果僅對測試之樣品負責，同時此樣品僅保留90天。本報告未經本公司書面許可，不可部份複製。
This document is issued by the Company subject to its General Conditions of Service printed overleaf, available on request or accessible at http://www.sgs.com.tw/Terms-and-Conditions and for electronic format documents, subject to Terms and Conditions for Electronic Documents at http://www.sgs.com.tw/Terms-and-Conditions. Attention is drawn to the limitation of liability, indemnification and jurisdiction issues defined therein. Any holder of this document is advised that information contained hereon reflects the Company's findings at the time of its intervention only and within the limits of Client's instructions, if any. The Company's sole responsibility is to its Client and this document does not exonerate parties to a transaction from exercising all their rights and obligations under the transaction documents. This document cannot be reproduced except in full, without prior written approval of the Company. Any unauthorized alteration, forgery or falsification of the content or appearance of this document is unlawful and offenders may be prosecuted to the fullest extent of the law.

maximum output power for 100 % RB allocation is less than the highest maximum output power in 50% and 1 RB allocations and the highest reported SAR for 1 RB and 50% RB allocation in 5.2.1 and 5.2.2 are ≤ 0.8 W/kg.

- Otherwise, SAR is measured for the highest output power channel and if the reported SAR is > 1.45 W/kg, the remaining required test channels must also be tested.

d. Per Section 5.2.4, Higher order modulations

- For each modulation besides QPSK; e.g., 16-QAM, 64-QAM, apply the QPSK procedures in sections 5.2.1, 5.2.2 and 5.2.3 to determine the QAM configurations that may need SAR measurement. For each configuration identified as required for testing, SAR is required only when the highest maximum output power for the configuration in the higher order modulation is > ½ dB higher than the same configuration in QPSK or when the reported SAR for the QPSK configuration is > 1.45 W/kg.

e. Per Section 5.3, other channel bandwidth standalone SAR test requirements

- For the other channel bandwidths used by the device in a frequency band, apply all the procedures required for the largest channel bandwidth in section 5.2 to determine the channels and RB configurations that need SAR testing and only measure SAR when the highest maximum output power of a configuration requiring testing in the smaller channel bandwidth is > ½ dB higher than the equivalent channel configurations in the largest channel bandwidth configuration or the reported SAR of a configuration for the largest channel bandwidth is > 1.45 W/kg. The equivalent channel configuration for the RB allocation, RB offset and modulation etc. is determined for the smaller channel bandwidth according to the same number of RB allocated in the largest channel bandwidth.

- **WLAN 2.4GHz:** 802.11b DSSS SAR Test Requirements: SAR is measured for 2.4 GHz 802.11b DSSS mode using the highest measured maximum output power channel, when the reported SAR of the highest measured maximum output power channel for the exposure configuration is ≤ 0.8 W/kg, no further SAR testing is required for 802.11b DSSS in that exposure configuration. When the reported SAR is > 0.8 W/kg, SAR is required for that exposure configuration using the next highest measured output power channel. When any reported SAR is > 1.2 W/kg, SAR is required for the third channel; i.e., all channels require testing.
- **WLAN 2.4GHz:** 802.11g/n OFDM SAR Test Exclusion Requirements: SAR is not required for 802.11g/n since the highest reported SAR for DSSS is adjusted by the ratio of OFDM to DSSS specified maximum output power and the adjusted SAR is ≤ 1.2 W/kg.

Unless otherwise stated the results shown in this test report refer only to the sample(s) tested and such sample(s) are retained for 90 days only.
除非另有說明，此報告結果僅對測試之樣品負責，同時此樣品僅保留90天。本報告未經本公司書面許可，不可部份複製。
This document is issued by the Company subject to its General Conditions of Service printed overleaf, available on request or accessible at http://www.sgs.com.tw/Terms-and-Conditions and for electronic format documents, subject to Terms and Conditions for Electronic Documents at http://www.sgs.com.tw/Terms-and-Conditions. Attention is drawn to the limitation of liability, indemnification and jurisdiction issues defined therein. Any holder of this document is advised that information contained hereon reflects the Company's findings at the time of its intervention only and within the limits of Client's instructions, if any. The Company's sole responsibility is to its Client and this document does not exonerate parties to a transaction from exercising all their rights and obligations under the transaction documents. This document cannot be reproduced except in full, without prior written approval of the Company. Any unauthorized alteration, forgery or falsification of the content or appearance of this document is unlawful and offenders may be prosecuted to the fullest extent of the law.

4.3 Test position

For next to mouth exposure, SAR is evaluated with the front of the device positioned at 10 mm from a flat phantom. For extremity exposure, SAR is measured with the back of the device positioned in direct contact against the flat phantom, the wrist bands should be unstrapped and touching the phantom.

Unless otherwise stated the results shown in this test report refer only to the sample(s) tested and such sample(s) are retained for 90 days only.
除非另有說明，此報告結果僅對測試之樣品負責，同時此樣品僅保留90天。本報告未經本公司書面許可，不可部份複製。
This document is issued by the Company subject to its General Conditions of Service printed overleaf, available on request or accessible at http://www.sgs.com.tw/Terms-and-Conditions and for electronic format documents, subject to Terms and Conditions for Electronic Documents at http://www.sgs.com.tw/Terms-and-Conditions. Attention is drawn to the limitation of liability, indemnification and jurisdiction issues defined therein. Any holder of this document is advised that information contained hereon reflects the Company's findings at the time of its intervention only and within the limits of Client's instructions, if any. The Company's sole responsibility is to its Client and this document does not exonerate parties to a transaction from exercising all their rights and obligations under the transaction documents. This document cannot be reproduced except in full, without prior written approval of the Company. Any unauthorized alteration, forgery or falsification of the content or appearance of this document is unlawful and offenders may be prosecuted to the fullest extent of the law.

4.4 Test limit

§ 2.1093(d)(1)
Applications for equipment authorization of portable RF sources subject to routine environmental evaluation must contain a statement confirming compliance with the limits specified in § 1.1310 as part of their application. Technical information showing the basis for this statement must be submitted to the Commission upon request. The SAR limits specified in § 1.1310(a) through (c) of this chapter shall be used for evaluation of portable devices transmitting in the frequency range from 100 kHz to 6 GHz. Portable devices that transmit at frequencies above 6 GHz shall be evaluated in terms of the MPE limits specified in Table 1 to § 1.1310(e)(1). A minimum separation distance applicable to the operating configurations and exposure conditions of the device shall be used for the evaluation. In general, maximum time-averaged power levels must be used for evaluation. All unlicensed personal communications service (PCS) devices and unlicensed NII devices shall be subject to the limits for general population/uncontrolled exposure.
Radiofrequency radiation exposure limits.
§ 1.1310(a)
Specific absorption rate (SAR) shall be used to evaluate the environmental impact of human exposure to radiofrequency (RF) radiation as specified in § 1.1307(b) within the frequency range of 100 kHz to 6 GHz (inclusive).
§ 1.1310(b)
The SAR limits for occupational/controlled exposure are 0.4 W/kg, as averaged over the whole body, and a peak spatial-average SAR of 8 W/kg, averaged over any 1 gram of tissue (defined as a tissue volume in the shape of a cube). Exceptions are the parts of the human body treated as extremities, such as hands, wrists, feet, ankles, and pinnae, where the peak spatial-average SAR limit for occupational/controlled exposure is 20 W/kg, averaged over any 10 grams of tissue (defined as a tissue volume in the shape of a cube). Exposure may be averaged over a time period not to exceed 6 minutes to determine compliance with occupational/controlled SAR limits.
§ 1.1310(c)
The SAR limits for general population/uncontrolled exposure are 0.08 W/kg, as averaged over the whole body, and a peak spatial-average SAR of 1.6 W/kg, averaged over any 1 gram of tissue (defined as a tissue volume in the shape of a cube). Exceptions are the parts of the human body treated as extremities, such as hands, wrists, feet, ankles, and pinnae, where the peak spatial-average SAR limit is 4 W/kg, averaged over any 10 grams of tissue (defined as a tissue volume in the shape of a cube). Exposure may be averaged over a time period not to exceed 30 minutes to determine compliance with general population/uncontrolled SAR limits.

Note to paragraphs (a) through (c):
SAR is a measure of the rate of energy absorption due to exposure to RF electromagnetic energy. These SAR limits to be used for evaluation are based generally on criteria published by the American National Standards Institute (ANSI) for localized SAR in Section 4.2 of "IEEE Standard for Safety Levels with Respect to Human Exposure to Radio Frequency Electromagnetic Fields, 3 kHz to 300 GHz," ANSI/IEEE Std C95.1-1992, copyright 1992 by the Institute of Electrical and Electronics Engineers, Inc., New York, New York 10017. These criteria for SAR evaluation are similar to those recommended by the National Council on Radiation Protection and Measurements (NCRP) in "Biological Effects and Exposure Criteria for Radiofrequency Electromagnetic Fields," NCRP Report No. 86, Section 17.4.5, copyright 1986 by NCRP, Bethesda, Maryland 20814. Limits for whole body SAR and peak spatial-average SAR are based

Unless otherwise stated the results shown in this test report refer only to the sample(s) tested and such sample(s) are retained for 90 days only.
除非另有說明，此報告結果僅對測試之樣品負責，同時此樣品僅保留90天。本報告未經本公司書面許可，不可部份複製。
This document is issued by the Company subject to its General Conditions of Service printed overleaf, available on request or accessible at http://www.sgs.com.tw/Terms-and-Conditions and for electronic format documents, subject to Terms and Conditions for Electronic Documents at http://www.sgs.com.tw/Terms-and-Conditions. Attention is drawn to the limitation of liability, indemnification and jurisdiction issues defined therein. Any holder of this document is advised that information contained hereon reflects the Company's findings at the time of its intervention only and within the limits of Client's instructions, if any. The Company's sole responsibility is to its Client and this document does not exonerate parties to a transaction from exercising all their rights and obligations under the transaction documents. This document cannot be reproduced except in full, without prior written approval of the Company. Any unauthorized alteration, forgery or falsification of the content or appearance of this document is unlawful and offenders may be prosecuted to the fullest extent of the law.

on recommendations made in both of these documents. The MPE limits in Table 1 are based generally on criteria published by the NCRP in "Biological Effects and Exposure Criteria for Radiofrequency Electromagnetic Fields," NCRP Report No. 86, Sections 17.4.1, 17.4.1.1, 17.4.2 and 17.4.3, copyright 1986 by NCRP, Bethesda, Maryland 20814. In the frequency range from 100 MHz to 1500 MHz, these MPE exposure limits for field strength and power density are also generally based on criteria recommended by the ANSI in Section 4.1 of "IEEE Standard for Safety Levels with Respect to Human Exposure to Radio Frequency Electromagnetic Fields, 3 kHz to 300 GHz," ANSI/IEEE Std C95.1-1992, copyright 1992 by the Institute of Electrical and Electronics Engineers, Inc., New York, New York 10017.

Portable devices that transmit at frequencies above 6 GHz shall be evaluated in terms of the MPE limits specified in Table 1 to § 1.1310(e)(1).
According to ANSI/IEEE C95.1-1992, the criteria listed in the following Table shall be used to evaluate the environmental impact of human exposure to radio frequency (RF) radiation as specified in §1.1310.
Peak Spatially Averaged Power Density was evaluated over a circular area of 4cm2 per interim FCC Guidance for near-field power density evaluations per October 2018 TCB Workshop notes

Unless otherwise stated the results shown in this test report refer only to the sample(s) tested and such sample(s) are retained for 90 days only.
除非另有說明，此報告結果僅對測試之樣品負責，同時此樣品僅保留90天。本報告未經本公司書面許可，不可部份複製。
This document is issued by the Company subject to its General Conditions of Service printed overleaf, available on request or accessible at http://www.sgs.com.tw/Terms-and-Conditions and for electronic format documents, subject to Terms and Conditions for Electronic Documents at http://www.sgs.com.tw/Terms-and-Conditions. Attention is drawn to the limitation of liability, indemnification and jurisdiction issues defined therein. Any holder of this document is advised that information contained hereon reflects the Company's findings at the time of its intervention only and within the limits of Client's instructions, if any. The Company's sole responsibility is to its Client and this document does not exonerate parties to a transaction from exercising all their rights and obligations under the transaction documents. This document cannot be reproduced except in full, without prior written approval of the Company. Any unauthorized alteration, forgery or falsification of the content or appearance of this document is unlawful and offenders may be prosecuted to the fullest extent of the law.

Frequency range (MHz)	Electric field strength (V/m)	Magnetic field strength (A/m)	Power density (mW/cm^2)	Averaging time (minutes)
(i) Limits for Occupational/Controlled Exposure				
0.3-3.0	614	1.63	*(100)	≤6
3.0-30	1842/f	4.89/f	*($900/f^2$)	<6
30-300	61.4	0.163	1.0	<6
300-1,500			f/300	<6
1,500-100,000			5	<6
(ii) Limits for General Population/Uncontrolled Exposure				
0.3-1.34	614	1.63	*(100)	<30
1.34-30	824/f	2.19/f	*($180/f^2$)	<30
30-300	27.5	0.073	0.2	<30
300-1,500			f/1500	<30
1,500-100,000			1.0	<30

f = frequency in MHz. * = Plane-wave equivalent power density.
Table 1 to § 1.1310(e)(1) - Limits for Maximum Permissible Exposure (MPE)

Unless otherwise stated the results shown in this test report refer only to the sample(s) tested and such sample(s) are retained for 90 days only.
除非另有說明，此報告結果僅對測試之樣品負責，同時此樣品僅保留90天。本報告未經本公司書面許可，不可部份複製。
This document is issued by the Company subject to its General Conditions of Service printed overleaf, available on request or accessible at http://www.sgs.com.tw/Terms-and-Conditions and for electronic format documents, subject to Terms and Conditions for Electronic Documents at http://www.sgs.com.tw/Terms-and-Conditions. Attention is drawn to the limitation of liability, indemnification and jurisdiction issues defined therein. Any holder of this document is advised that information contained hereon reflects the Company's findings at the time of its intervention only and within the limits of Client's instructions, if any. The Company's sole responsibility is to its Client and this document does not exonerate parties to a transaction from exercising all their rights and obligations under the transaction documents. This document cannot be reproduced except in full, without prior written approval of the Company. Any unauthorized alteration, forgery or falsification of the content or appearance of this document is unlawful and offenders may be prosecuted to the fullest extent of the law.

5 MAXIMUM OUTPUT POWER

5.1 FDD LTE

LTE Band 2								
BW(MHz)	Modulation	RB Size	RB Offset	Conducted power (dBm)			Target Power + Max. Tolerance (dBm)	MPR Allowed per 3GPP(dB)
Frequency (MHz)				1860	1880	1900		
Channel				18700	18900	19100		
20	QPSK	1	0	23.96	23.57	23.55	24.50	0
		1	50	23.87	23.49	23.50	24.50	0
		1	99	23.75	23.38	23.44	24.50	0
		50	0	22.95	22.83	22.71	23.50	1
		50	25	22.93	22.81	22.70	23.50	1
		50	50	22.85	22.76	22.82	23.50	1
		100	0	22.89	22.77	22.73	23.50	1
20	16-QAM	1	0	22.90	22.76	22.72	23.50	1
		1	50	22.81	22.88	22.74	23.50	1
		1	99	22.80	22.85	22.73	23.50	1
		50	0	21.77	21.74	21.83	22.50	2
		50	25	21.75	21.89	21.82	22.50	2
		50	50	21.87	21.76	21.57	22.50	2
		100	0	21.70	21.68	21.73	22.50	2

LTE Band 2								
BW(MHz)	Modulation	RB Size	RB Offset	Conducted power (dBm)			Target Power + Max. Tolerance (dBm)	MPR Allowed per 3GPP(dB)
Frequency (MHz)				1857.5	1880	1902.5		
Channel				18675	18900	19125		
15	QPSK	1	0	23.88	23.78	23.84	24.50	0
		1	36	23.82	23.71	23.75	24.50	0
		1	74	23.76	23.81	23.83	24.50	0
		36	0	22.88	22.81	22.85	23.50	1
		36	18	22.80	22.75	22.78	23.50	1
		36	37	22.83	22.90	22.91	23.50	1
		75	0	22.80	22.78	22.89	23.50	1
15	16-QAM	1	0	22.86	22.74	22.86	23.50	1
		1	36	22.72	22.83	22.70	23.50	1
		1	74	22.78	22.71	22.77	23.50	1
		36	0	21.84	21.77	21.71	22.50	2
		36	18	21.89	21.74	21.82	22.50	2
		36	37	21.73	21.84	21.63	22.50	2
		75	0	21.76	21.68	21.90	22.50	2

Unless otherwise stated the results shown in this test report refer only to the sample(s) tested and such sample(s) are retained for 90 days only.
除非另有說明，此報告結果僅對測試之樣品負責，同時此樣品僅保留90天。本報告未經本公司書面許可，不可部份複製。
This document is issued by the Company subject to its General Conditions of Service printed overleaf, available on request or accessible at http://www.sgs.com.tw/Terms-and-Conditions and for electronic format documents, subject to Terms and Conditions for Electronic Documents at http://www.sgs.com.tw/Terms-and-Conditions. Attention is drawn to the limitation of liability, indemnification and jurisdiction issues defined therein. Any holder of this document is advised that information contained hereon reflects the Company's findings at the time of its intervention only and within the limits of Client's instructions, if any. The Company's sole responsibility is to its Client and this document does not exonerate parties to a transaction from exercising all their rights and obligations under the transaction documents. This document cannot be reproduced except in full, without prior written approval of the Company. Any unauthorized alteration, forgery or falsification of the content or appearance of this document is unlawful and offenders may be prosecuted to the fullest extent of the law.

LTE Band 2								
BW(MHz)	Modulation	RB Size	RB Offset	Conducted power (dBm)			Target Power + Max. Tolerance (dBm)	MPR Allowed per 3GPP(dB)
Frequency (MHz)				1855	1880	1905		
Channel				18650	18900	19150		
10	QPSK	1	0	23.90	23.83	23.81	24.50	0
		1	25	23.86	23.79	23.82	24.50	0
		1	49	23.72	23.80	23.71	24.50	0
		25	0	22.89	22.74	22.83	23.50	1
		25	12	22.72	22.75	22.71	23.50	1
		25	25	22.83	22.82	22.89	23.50	1
		50	0	22.71	22.82	22.68	23.50	1
10	16-QAM	1	0	22.79	22.73	22.87	23.50	1
		1	25	22.82	22.70	22.78	23.50	1
		1	49	22.84	22.86	22.90	23.50	1
		25	0	21.89	21.88	21.85	22.50	2
		25	12	21.74	21.81	21.83	22.50	2
		25	25	21.78	21.75	21.88	22.50	2
		50	0	21.76	21.87	21.81	22.50	2

LTE Band 2								
BW(MHz)	Modulation	RB Size	RB Offset	Conducted power (dBm)			Target Power + Max. Tolerance (dBm)	MPR Allowed per 3GPP(dB)
Frequency (MHz)				1852.5	1880	1907.5		
Channel				18625	18900	19175		
5	QPSK	1	0	23.87	23.70	23.85	24.50	0
		1	12	23.71	23.74	23.84	24.50	0
		1	24	23.75	23.68	23.73	24.50	0
		12	0	22.72	22.90	22.74	23.50	1
		12	6	22.87	22.72	22.85	23.50	1
		12	13	22.67	22.66	22.62	23.50	1
		25	0	22.73	22.88	22.71	23.50	1
5	16-QAM	1	0	22.84	22.85	22.72	23.50	1
		1	12	22.65	22.70	22.86	23.50	1
		1	24	22.79	22.82	22.87	23.50	1
		12	0	21.77	21.74	21.71	22.50	2
		12	6	21.83	21.67	21.80	22.50	2
		12	13	21.84	21.87	21.85	22.50	2
		25	0	21.77	21.84	21.88	22.50	2

Unless otherwise stated the results shown in this test report refer only to the sample(s) tested and such sample(s) are retained for 90 days only.
除非另有說明，此報告結果僅對測試之樣品負責，同時此樣品僅保留90天。本報告未經本公司書面許可，不可部份複製。
This document is issued by the Company subject to its General Conditions of Service printed overleaf, available on request or accessible at http://www.sgs.com.tw/Terms-and-Conditions and for electronic format documents, subject to Terms and Conditions for Electronic Documents at http://www.sgs.com.tw/Terms-and-Conditions. Attention is drawn to the limitation of liability, indemnification and jurisdiction issues defined therein. Any holder of this document is advised that information contained hereon reflects the Company's findings at the time of its intervention only and within the limits of Client's instructions, if any. The Company's sole responsibility is to its Client and this document does not exonerate parties to a transaction from exercising all their rights and obligations under the transaction documents. This document cannot be reproduced except in full, without prior written approval of the Company. Any unauthorized alteration, forgery or falsification of the content or appearance of this document is unlawful and offenders may be prosecuted to the fullest extent of the law.

LTE Band 2								
BW(MHz)	Modulation	RB Size	RB Offset	Conducted power (dBm)			Target Power + Max. Tolerance (dBm)	MPR Allowed per 3GPP(dB)
Frequency (MHz)				1851.5	1880	1908.5		
Channel				18615	18900	19185		
3	QPSK	1	0	23.86	23.75	23.87	24.50	0
		1	7	23.83	23.84	23.74	24.50	0
		1	14	23.70	23.63	23.71	24.50	0
		8	0	22.74	22.72	22.90	23.50	1
		8	4	22.79	22.81	22.89	23.50	1
		8	7	22.87	22.86	22.84	23.50	1
		15	0	22.72	22.69	22.73	23.50	1
3	16-QAM	1	0	22.79	22.52	22.82	23.50	1
		1	7	22.77	22.85	22.90	23.50	1
		1	14	22.79	22.76	22.84	23.50	1
		8	0	21.81	21.74	21.87	22.50	2
		8	4	21.84	21.78	21.71	22.50	2
		8	7	21.83	21.80	21.89	22.50	2
		15	0	21.87	21.70	21.72	22.50	2

LTE Band 2								
BW(MHz)	Modulation	RB Size	RB Offset	Conducted power (dBm)			Target Power + Max. Tolerance (dBm)	MPR Allowed per 3GPP(dB)
Frequency (MHz)				1850.7	1880	1909.3		
Channel				18607	18900	19193		
1.4	QPSK	1	0	23.78	23.73	23.81	24.50	0
		1	2	23.80	23.71	23.79	24.50	0
		1	5	23.72	23.86	23.75	24.50	0
		3	0	23.76	23.79	23.78	24.50	0
		3	2	23.80	23.87	23.70	24.50	0
		3	3	23.86	23.75	23.82	24.50	0
		6	0	22.87	22.77	22.79	23.50	1
1.4	16-QAM	1	0	22.89	22.71	22.70	23.50	1
		1	2	22.83	22.78	22.89	23.50	1
		1	5	22.85	22.84	22.80	23.50	1
		3	0	22.86	22.71	22.72	23.50	1
		3	2	22.77	22.70	22.81	23.50	1
		3	3	22.74	22.79	22.65	23.50	1
		6	0	21.75	21.88	21.74	22.50	2

Unless otherwise stated the results shown in this test report refer only to the sample(s) tested and such sample(s) are retained for 90 days only.
除非另有說明，此報告結果僅對測試之樣品負責，同時此樣品僅保留90天。本報告未經本公司書面許可，不可部份複製。
This document is issued by the Company subject to its General Conditions of Service printed overleaf, available on request or accessible at http://www.sgs.com.tw/Terms-and-Conditions and for electronic format documents, subject to Terms and Conditions for Electronic Documents at http://www.sgs.com.tw/Terms-and-Conditions. Attention is drawn to the limitation of liability, indemnification and jurisdiction issues defined therein. Any holder of this document is advised that information contained hereon reflects the Company's findings at the time of its intervention only and within the limits of Client's instructions, if any. The Company's sole responsibility is to its Client and this document does not exonerate parties to a transaction from exercising all their rights and obligations under the transaction documents. This document cannot be reproduced except in full, without prior written approval of the Company. Any unauthorized alteration, forgery or falsification of the content or appearance of this document is unlawful and offenders may be prosecuted to the fullest extent of the law.

LTE Band 4								
BW(MHz)	Modulation	RB Size	RB Offset	Conducted power (dBm)			Target Power + Max. Tolerance (dBm)	MPR Allowed per 3GPP(dB)
Frequency (MHz)				1720	1732.5	1745		
Channel				20050	20175	20300		
20	QPSK	1	0	23.93	23.72	23.86	24.50	0
		1	50	23.87	23.66	23.75	24.50	0
		1	99	23.71	23.54	23.70	24.50	0
		50	0	23.07	22.95	22.83	23.50	1
		50	25	22.78	22.80	22.82	23.50	1
		50	50	22.91	22.92	22.78	23.50	1
		100	0	22.84	22.88	22.93	23.50	1
20	16-QAM	1	0	22.94	22.89	22.91	23.50	1
		1	50	22.90	22.97	22.83	23.50	1
		1	99	22.81	22.88	22.77	23.50	1
		50	0	21.80	21.89	21.79	22.50	2
		50	25	21.82	21.81	21.91	22.50	2
		50	50	21.78	21.84	21.68	22.50	2
		100	0	21.88	21.83	21.85	22.50	2

LTE Band 4								
BW(MHz)	Modulation	RB Size	RB Offset	Conducted power (dBm)			Target Power + Max. Tolerance (dBm)	MPR Allowed per 3GPP(dB)
Frequency (MHz)				1717.5	1732.5	1747.5		
Channel				20025	20175	20325		
15	QPSK	1	0	23.72	23.71	23.70	24.50	0
		1	36	23.74	23.78	23.87	24.50	0
		1	74	23.77	23.69	23.80	24.50	0
		36	0	22.71	22.69	22.72	23.50	1
		36	18	22.74	22.84	22.68	23.50	1
		36	37	22.68	22.70	22.77	23.50	1
		75	0	22.80	22.76	22.75	23.50	1
15	16-QAM	1	0	22.68	22.85	22.82	23.50	1
		1	36	22.69	22.84	22.71	23.50	1
		1	74	22.86	22.67	22.80	23.50	1
		36	0	21.77	21.80	21.83	22.50	2
		36	18	21.74	21.81	21.84	22.50	2
		36	37	21.79	21.69	21.86	22.50	2
		75	0	21.68	21.83	21.92	22.50	2

Unless otherwise stated the results shown in this test report refer only to the sample(s) tested and such sample(s) are retained for 90 days only.
除非另有說明，此報告結果僅對測試之樣品負責，同時此樣品僅保留90天。本報告未經本公司書面許可，不可部份複製。
This document is issued by the Company subject to its General Conditions of Service printed overleaf, available on request or accessible at http://www.sgs.com.tw/Terms-and-Conditions and for electronic format documents, subject to Terms and Conditions for Electronic Documents at http://www.sgs.com.tw/Terms-and-Conditions. Attention is drawn to the limitation of liability, indemnification and jurisdiction issues defined therein. Any holder of this document is advised that information contained hereon reflects the Company's findings at the time of its intervention only and within the limits of Client's instructions, if any. The Company's sole responsibility is to its Client and this document does not exonerate parties to a transaction from exercising all their rights and obligations under the transaction documents. This document cannot be reproduced except in full, without prior written approval of the Company. Any unauthorized alteration, forgery or falsification of the content or appearance of this document is unlawful and offenders may be prosecuted to the fullest extent of the law.

LTE Band 4								
BW(MHz)	Modulation	RB Size	RB Offset	Conducted power (dBm)			Target Power + Max. Tolerance (dBm)	MPR Allowed per 3GPP(dB)
Frequency (MHz)				1715	1732.5	1750		
Channel				20000	20175	20350		
10	QPSK	1	0	23.73	23.87	23.72	24.50	0
		1	25	23.70	23.66	23.85	24.50	0
		1	49	23.69	23.79	23.78	24.50	0
		25	0	22.72	22.69	22.71	23.50	1
		25	12	22.76	22.78	22.81	23.50	1
		25	25	22.70	22.73	22.79	23.50	1
		50	0	22.69	22.65	22.74	23.50	1
10	16-QAM	1	0	22.86	22.87	22.80	23.50	1
		1	25	22.74	22.85	22.69	23.50	1
		1	49	22.78	22.83	22.75	23.50	1
		25	0	21.71	21.84	21.74	22.50	2
		25	12	21.86	21.80	21.83	22.50	2
		25	25	21.78	21.82	21.86	22.50	2
		50	0	21.76	21.86	21.69	22.50	2

LTE Band 4								
BW(MHz)	Modulation	RB Size	RB Offset	Conducted power (dBm)			Target Power + Max. Tolerance (dBm)	MPR Allowed per 3GPP(dB)
Frequency (MHz)				1712.5	1732.5	1752.5		
Channel				19975	20175	20375		
5	QPSK	1	0	23.83	23.76	23.81	24.50	0
		1	12	23.73	23.78	23.83	24.50	0
		1	24	23.75	23.70	23.82	24.50	0
		12	0	22.76	22.71	22.84	23.50	1
		12	6	22.80	22.75	22.79	23.50	1
		12	13	22.73	22.87	22.74	23.50	1
		25	0	22.68	22.70	22.69	23.50	1
5	16-QAM	1	0	22.75	22.74	22.72	23.50	1
		1	12	22.84	22.69	22.59	23.50	1
		1	24	22.74	22.85	22.79	23.50	1
		12	0	21.72	21.87	21.71	22.50	2
		12	6	21.75	21.84	21.79	22.50	2
		12	13	21.73	21.82	21.78	22.50	2
		25	0	21.82	21.77	21.71	22.50	2

Unless otherwise stated the results shown in this test report refer only to the sample(s) tested and such sample(s) are retained for 90 days only.
除非另有說明，此報告結果僅對測試之樣品負責，同時此樣品僅保留90天。本報告未經本公司書面許可，不可部份複製。
This document is issued by the Company subject to its General Conditions of Service printed overleaf, available on request or accessible at http://www.sgs.com.tw/Terms-and-Conditions and for electronic format documents, subject to Terms and Conditions for Electronic Documents at http://www.sgs.com.tw/Terms-and-Conditions. Attention is drawn to the limitation of liability, indemnification and jurisdiction issues defined therein. Any holder of this document is advised that information contained hereon reflects the Company's findings at the time of its intervention only and within the limits of Client's instructions, if any. The Company's sole responsibility is to its Client and this document does not exonerate parties to a transaction from exercising all their rights and obligations under the transaction documents. This document cannot be reproduced except in full, without prior written approval of the Company. Any unauthorized alteration, forgery or falsification of the content or appearance of this document is unlawful and offenders may be prosecuted to the fullest extent of the law.

LTE Band 4								
BW(MHz)	Modulation	RB Size	RB Offset	Conducted power (dBm)			Target Power + Max. Tolerance (dBm)	MPR Allowed per 3GPP(dB)
Frequency (MHz)				1711.5	1732.5	1753.5		
Channel				19965	20175	20385		
3	QPSK	1	0	23.75	23.84	23.66	24.50	0
		1	7	23.67	23.71	23.80	24.50	0
		1	14	23.79	23.78	23.65	24.50	0
		8	0	22.77	22.83	22.69	23.50	1
		8	4	22.67	22.75	22.68	23.50	1
		8	7	22.65	22.69	22.84	23.50	1
		15	0	22.64	22.80	22.66	23.50	1
3	16-QAM	1	0	22.83	22.74	22.77	23.50	1
		1	7	22.73	22.83	22.66	23.50	1
		1	14	22.78	22.70	22.75	23.50	1
		8	0	21.69	21.83	21.71	22.50	2
		8	4	21.75	21.65	21.75	22.50	2
		8	7	21.82	21.79	21.81	22.50	2
		15	0	21.64	21.78	21.53	22.50	2

LTE Band 4								
BW(MHz)	Modulation	RB Size	RB Offset	Conducted power (dBm)			Target Power + Max. Tolerance (dBm)	MPR Allowed per 3GPP(dB)
Frequency (MHz)				1710.7	1732.5	1754.3		
Channel				19957	20175	20393		
1.4	QPSK	1	0	23.67	23.78	23.68	24.50	0
		1	2	23.79	23.70	23.74	24.50	0
		1	5	23.80	23.68	23.80	24.50	0
		3	0	23.72	23.65	23.69	24.50	0
		3	2	23.73	23.53	23.74	24.50	0
		3	3	23.84	23.69	23.75	24.50	0
		6	0	22.69	22.66	22.74	23.50	1
1.4	16-QAM	1	0	22.79	22.83	22.75	23.50	1
		1	2	22.68	22.66	22.71	23.50	1
		1	5	22.66	22.73	22.77	23.50	1
		3	0	22.81	22.74	22.67	23.50	1
		3	2	22.72	22.65	22.66	23.50	1
		3	3	22.70	22.76	22.70	23.50	1
		6	0	21.80	21.66	21.81	22.50	2

Unless otherwise stated the results shown in this test report refer only to the sample(s) tested and such sample(s) are retained for 90 days only.
除非另有說明，此報告結果僅對測試之樣品負責，同時此樣品僅保留90天。本報告未經本公司書面許可，不可部份複製。
This document is issued by the Company subject to its General Conditions of Service printed overleaf, available on request or accessible at http://www.sgs.com.tw/Terms-and-Conditions and for electronic format documents, subject to Terms and Conditions for Electronic Documents at http://www.sgs.com.tw/Terms-and-Conditions. Attention is drawn to the limitation of liability, indemnification and jurisdiction issues defined therein. Any holder of this document is advised that information contained hereon reflects the Company's findings at the time of its intervention only and within the limits of Client's instructions, if any. The Company's sole responsibility is to its Client and this document does not exonerate parties to a transaction from exercising all their rights and obligations under the transaction documents. This document cannot be reproduced except in full, without prior written approval of the Company. Any unauthorized alteration, forgery or falsification of the content or appearance of this document is unlawful and offenders may be prosecuted to the fullest extent of the law.

LTE Band 12								
BW(MHz)	Modulation	RB Size	RB Offset	Conducted power (dBm)			Target Power + Max. Tolerance (dBm)	MPR Allowed per 3GPP(dB)
Frequency (MHz)				704	707.5	711		
Channel				23060	23095	23130		
10	QPSK	1	0	23.62	23.79	23.68	24.50	0
		1	25	23.51	23.44	23.47	24.50	0
		1	49	23.54	23.48	23.50	24.50	0
		25	0	22.41	22.40	22.59	23.50	1
		25	12	22.48	22.58	22.53	23.50	1
		25	25	22.44	22.48	22.46	23.50	1
		50	0	22.56	22.50	22.48	23.50	1
10	16-QAM	1	0	22.51	22.54	22.49	23.50	1
		1	25	22.53	22.58	22.45	23.50	1
		1	49	22.39	22.59	22.43	23.50	1
		25	0	21.58	21.42	21.56	22.50	2
		25	12	21.44	21.59	21.56	22.50	2
		25	25	21.54	21.54	21.48	22.50	2
		50	0	21.52	21.55	21.47	22.50	2

LTE Band 12								
BW(MHz)	Modulation	RB Size	RB Offset	Conducted power (dBm)			Target Power + Max. Tolerance (dBm)	MPR Allowed per 3GPP(dB)
Frequency (MHz)				701.5	707.5	713.5		
Channel				23035	23095	23155		
5	QPSK	1	0	23.52	23.59	23.43	24.50	0
		1	12	23.41	23.48	23.54	24.50	0
		1	24	23.50	23.54	23.47	24.50	0
		12	0	22.45	22.43	22.52	23.50	1
		12	6	22.52	22.51	22.56	23.50	1
		12	13	22.58	22.39	22.42	23.50	1
		25	0	22.43	22.57	22.51	23.50	1
5	16-QAM	1	0	22.44	22.47	22.47	23.50	1
		1	12	22.47	22.50	22.50	23.50	1
		1	24	22.47	22.47	22.47	23.50	1
		12	0	21.44	21.54	21.51	22.50	2
		12	6	21.41	21.56	21.41	22.50	2
		12	13	21.42	21.40	21.54	22.50	2
		25	0	21.55	21.54	21.43	22.50	2

Unless otherwise stated the results shown in this test report refer only to the sample(s) tested and such sample(s) are retained for 90 days only.
除非另有說明，此報告結果僅對測試之樣品負責，同時此樣品僅保留90天。本報告未經本公司書面許可，不可部份複製。
This document is issued by the Company subject to its General Conditions of Service printed overleaf, available on request or accessible at http://www.sgs.com.tw/Terms-and-Conditions and for electronic format documents, subject to Terms and Conditions for Electronic Documents at http://www.sgs.com.tw/Terms-and-Conditions. Attention is drawn to the limitation of liability, indemnification and jurisdiction issues defined therein. Any holder of this document is advised that information contained hereon reflects the Company's findings at the time of its intervention only and within the limits of Client's instructions, if any. The Company's sole responsibility is to its Client and this document does not exonerate parties to a transaction from exercising all their rights and obligations under the transaction documents. This document cannot be reproduced except in full, without prior written approval of the Company. Any unauthorized alteration, forgery or falsification of the content or appearance of this document is unlawful and offenders may be prosecuted to the fullest extent of the law.

LTE Band 12								
BW(MHz)	Modulation	RB Size	RB Offset	Conducted power (dBm)			Target Power + Max. Tolerance (dBm)	MPR Allowed per 3GPP(dB)
Frequency (MHz)				700.5	707.5	714.5		
Channel				23025	23095	23165		
3	QPSK	1	0	23.41	23.55	23.50	24.50	0
		1	7	23.53	23.40	23.51	24.50	0
		1	14	23.46	23.54	23.47	24.50	0
		8	0	22.54	22.47	22.49	23.50	1
		8	4	22.40	22.49	22.49	23.50	1
		8	7	22.51	22.53	22.50	23.50	1
		15	0	22.41	22.50	22.56	23.50	1
3	16-QAM	1	0	22.49	22.50	22.58	23.50	1
		1	7	22.44	22.55	22.42	23.50	1
		1	14	22.41	22.43	22.56	23.50	1
		8	0	21.59	21.48	21.55	22.50	2
		8	4	21.53	21.45	21.46	22.50	2
		8	7	21.51	21.56	21.51	22.50	2
		15	0	21.57	21.48	21.58	22.50	2

LTE Band 12								
BW(MHz)	Modulation	RB Size	RB Offset	Conducted power (dBm)			Target Power + Max. Tolerance (dBm)	MPR Allowed per 3GPP(dB)
Frequency (MHz)				699.7	707.5	715.3		
Channel				23017	23095	23173		
1.4	QPSK	1	0	23.54	23.45	23.47	24.50	0
		1	2	23.43	23.58	23.51	24.50	0
		1	5	23.51	23.42	23.50	24.50	0
		3	0	23.58	23.51	23.51	24.50	0
		3	2	23.53	23.53	23.44	24.50	0
		3	3	23.56	23.54	23.44	24.50	0
		6	0	22.48	22.45	22.47	23.50	1
1.4	16-QAM	1	0	22.45	22.50	22.54	23.50	1
		1	2	22.48	22.51	22.46	23.50	1
		1	5	22.51	22.45	22.41	23.50	1
		3	0	22.51	22.44	22.57	23.50	1
		3	2	22.58	22.57	22.48	23.50	1
		3	3	22.57	22.42	22.49	23.50	1
		6	0	21.51	21.41	21.40	22.50	2

Unless otherwise stated the results shown in this test report refer only to the sample(s) tested and such sample(s) are retained for 90 days only.
除非另有說明，此報告結果僅對測試之樣品負責，同時此樣品僅保留90天。本報告未經本公司書面許可，不可部份複製。
This document is issued by the Company subject to its General Conditions of Service printed overleaf, available on request or accessible at http://www.sgs.com.tw/Terms-and-Conditions and for electronic format documents, subject to Terms and Conditions for Electronic Documents at http://www.sgs.com.tw/Terms-and-Conditions. Attention is drawn to the limitation of liability, indemnification and jurisdiction issues defined therein. Any holder of this document is advised that information contained hereon reflects the Company's findings at the time of its intervention only and within the limits of Client's instructions, if any. The Company's sole responsibility is to its Client and this document does not exonerate parties to a transaction from exercising all their rights and obligations under the transaction documents. This document cannot be reproduced except in full, without prior written approval of the Company. Any unauthorized alteration, forgery or falsification of the content or appearance of this document is unlawful and offenders may be prosecuted to the fullest extent of the law.

LTE Band 66								
BW(MHz)	Modulation	RB Size	RB Offset	Conducted power (dBm)			Target Power + Max. Tolerance (dBm)	MPR Allowed per 3GPP(dB)
Frequency (MHz)				1720	1745	1770		
Channel				132072	132322	132572		
20	QPSK	1	0	23.89	23.95	23.81	24.50	0
		1	50	23.66	23.57	23.67	24.50	0
		1	99	23.76	23.73	23.63	24.50	0
		50	0	22.99	23.05	22.91	23.50	1
		50	25	22.83	22.75	22.72	23.50	1
		50	50	22.81	22.64	22.71	23.50	1
		100	0	22.64	22.69	22.80	23.50	1
20	16-QAM	1	0	22.73	22.72	22.77	23.50	1
		1	50	22.71	22.76	22.69	23.50	1
		1	99	22.75	22.70	22.75	23.50	1
		50	0	22.02	21.99	21.92	22.50	2
		50	25	21.91	21.98	21.89	22.50	2
		50	50	21.86	21.97	21.77	22.50	2
		100	0	21.85	21.85	21.71	22.50	2

LTE Band 66								
BW(MHz)	Modulation	RB Size	RB Offset	Conducted power (dBm)			Target Power + Max. Tolerance (dBm)	MPR Allowed per 3GPP(dB)
Frequency (MHz)				1717.5	1745	1772.5		
Channel				132047	132322	132597		
15	QPSK	1	0	23.72	23.78	23.74	24.50	0
		1	36	23.65	23.82	23.70	24.50	0
		1	74	23.81	23.65	23.68	24.50	0
		36	0	22.75	22.78	22.71	23.50	1
		36	18	22.82	22.80	22.76	23.50	1
		36	37	22.77	22.63	22.61	23.50	1
		75	0	22.68	22.65	22.58	23.50	1
15	16-QAM	1	0	22.73	22.77	22.76	23.50	1
		1	36	22.58	22.82	22.63	23.50	1
		1	74	22.78	22.66	22.70	23.50	1
		36	0	21.76	21.84	21.91	22.50	2
		36	18	21.78	21.77	21.90	22.50	2
		36	37	21.69	21.87	21.81	22.50	2
		75	0	21.82	21.92	21.88	22.50	2

Unless otherwise stated the results shown in this test report refer only to the sample(s) tested and such sample(s) are retained for 90 days only.
除非另有說明，此報告結果僅對測試之樣品負責，同時此樣品僅保留90天。本報告未經本公司書面許可，不可部份複製。
This document is issued by the Company subject to its General Conditions of Service printed overleaf, available on request or accessible at http://www.sgs.com.tw/Terms-and-Conditions and for electronic format documents, subject to Terms and Conditions for Electronic Documents at http://www.sgs.com.tw/Terms-and-Conditions. Attention is drawn to the limitation of liability, indemnification and jurisdiction issues defined therein. Any holder of this document is advised that information contained hereon reflects the Company's findings at the time of its intervention only and within the limits of Client's instructions, if any. The Company's sole responsibility is to its Client and this document does not exonerate parties to a transaction from exercising all their rights and obligations under the transaction documents. This document cannot be reproduced except in full, without prior written approval of the Company. Any unauthorized alteration, forgery or falsification of the content or appearance of this document is unlawful and offenders may be prosecuted to the fullest extent of the law.

LTE Band 66								
BW(MHz)	Modulation	RB Size	RB Offset	Conducted power (dBm)			Target Power + Max. Tolerance (dBm)	MPR Allowed per 3GPP(dB)
Frequency (MHz)				1715	1745	1775		
Channel				132022	132322	132622		
10	QPSK	1	0	23.70	23.69	23.64	24.50	0
		1	25	23.61	23.66	23.78	24.50	0
		1	49	23.64	23.72	23.79	24.50	0
		25	0	22.72	22.70	22.71	23.50	1
		25	12	22.66	22.63	22.73	23.50	1
		25	25	22.66	22.76	22.69	23.50	1
		50	0	22.70	22.62	22.75	23.50	1
10	16-QAM	1	0	22.67	22.76	22.71	23.50	1
		1	25	22.64	22.78	22.73	23.50	1
		1	49	22.58	22.64	22.75	23.50	1
		25	0	21.78	21.82	21.77	22.50	2
		25	12	21.87	21.72	21.70	22.50	2
		25	25	21.74	21.75	21.89	22.50	2
		50	0	21.78	21.84	21.91	22.50	2

LTE Band 66								
BW(MHz)	Modulation	RB Size	RB Offset	Conducted power (dBm)			Target Power + Max. Tolerance (dBm)	MPR Allowed per 3GPP(dB)
Frequency (MHz)				1712.5	1745	1777.5		
Channel				131997	132322	132647		
5	QPSK	1	0	23.60	23.67	23.80	24.50	0
		1	12	23.65	23.76	23.71	24.50	0
		1	24	23.68	23.55	23.61	24.50	0
		12	0	22.77	22.70	22.66	23.50	1
		12	6	22.76	22.67	22.61	23.50	1
		12	13	22.74	22.79	22.75	23.50	1
		25	0	22.68	22.73	22.69	23.50	1
5	16-QAM	1	0	22.69	22.89	22.78	23.50	1
		1	12	22.77	22.64	22.76	23.50	1
		1	24	22.70	22.65	22.80	23.50	1
		12	0	21.71	21.70	21.75	22.50	2
		12	6	21.77	21.67	21.62	22.50	2
		12	13	21.76	21.69	21.78	22.50	2
		25	0	21.67	21.71	21.74	22.50	2

Unless otherwise stated the results shown in this test report refer only to the sample(s) tested and such sample(s) are retained for 90 days only.
除非另有說明，此報告結果僅對測試之樣品負責，同時此樣品僅保留90天。本報告未經本公司書面許可，不可部份複製。
This document is issued by the Company subject to its General Conditions of Service printed overleaf, available on request or accessible at http://www.sgs.com.tw/Terms-and-Conditions and for electronic format documents, subject to Terms and Conditions for Electronic Documents at http://www.sgs.com.tw/Terms-and-Conditions. Attention is drawn to the limitation of liability, indemnification and jurisdiction issues defined therein. Any holder of this document is advised that information contained hereon reflects the Company's findings at the time of its intervention only and within the limits of Client's instructions, if any. The Company's sole responsibility is to its Client and this document does not exonerate parties to a transaction from exercising all their rights and obligations under the transaction documents. This document cannot be reproduced except in full, without prior written approval of the Company. Any unauthorized alteration, forgery or falsification of the content or appearance of this document is unlawful and offenders may be prosecuted to the fullest extent of the law.

LTE Band 66								
BW(MHz)	Modulation	RB Size	RB Offset	Conducted power (dBm)			Target Power + Max. Tolerance (dBm)	MPR Allowed per 3GPP(dB)
Frequency (MHz)				1711.5	1745	1778.5		
Channel				131987	132322	132657		
3	QPSK	1	0	23.63	23.68	23.72	24.50	0
		1	7	23.70	23.71	23.69	24.50	0
		1	14	23.64	23.74	23.65	24.50	0
		8	0	22.78	22.65	22.77	23.50	1
		8	4	22.74	22.76	22.66	23.50	1
		8	7	22.62	22.75	22.69	23.50	1
		15	0	22.76	22.67	22.73	23.50	1
3	16-QAM	1	0	22.74	22.80	22.80	23.50	1
		1	7	22.70	22.62	22.75	23.50	1
		1	14	22.64	22.77	22.63	23.50	1
		8	0	21.76	21.73	21.67	22.50	2
		8	4	21.60	21.68	21.75	22.50	2
		8	7	21.73	21.78	21.79	22.50	2
		15	0	21.81	21.62	21.74	22.50	2

LTE Band 66								
BW(MHz)	Modulation	RB Size	RB Offset	Conducted power (dBm)			Target Power + Max. Tolerance (dBm)	MPR Allowed per 3GPP(dB)
Frequency (MHz)				1710.7	1745	1779.3		
Channel				131979	132322	132665		
1.4	QPSK	1	0	23.79	23.67	23.75	24.50	0
		1	2	23.71	23.61	23.77	24.50	0
		1	5	23.70	23.67	23.73	24.50	0
		3	0	23.64	23.51	23.53	24.50	0
		3	2	23.57	23.48	23.60	24.50	0
		3	3	23.56	23.68	23.59	24.50	0
		6	0	22.60	22.70	22.63	23.50	1
1.4	16-QAM	1	0	22.69	22.71	22.75	23.50	1
		1	2	22.67	22.73	22.67	23.50	1
		1	5	22.76	22.64	22.62	23.50	1
		3	0	22.75	22.88	22.76	23.50	1
		3	2	22.68	22.79	22.62	23.50	1
		3	3	22.61	22.64	22.78	23.50	1
		6	0	21.63	21.75	21.61	22.50	2

Unless otherwise stated the results shown in this test report refer only to the sample(s) tested and such sample(s) are retained for 90 days only.
除非另有說明，此報告結果僅對測試之樣品負責，同時此樣品僅保留90天。本報告未經本公司書面許可，不可部份複製。
This document is issued by the Company subject to its General Conditions of Service printed overleaf, available on request or accessible at http://www.sgs.com.tw/Terms-and-Conditions and for electronic format documents, subject to Terms and Conditions for Electronic Documents at http://www.sgs.com.tw/Terms-and-Conditions. Attention is drawn to the limitation of liability, indemnification and jurisdiction issues defined therein. Any holder of this document is advised that information contained hereon reflects the Company's findings at the time of its intervention only and within the limits of Client's instructions, if any. The Company's sole responsibility is to its Client and this document does not exonerate parties to a transaction from exercising all their rights and obligations under the transaction documents. This document cannot be reproduced except in full, without prior written approval of the Company. Any unauthorized alteration, forgery or falsification of the content or appearance of this document is unlawful and offenders may be prosecuted to the fullest extent of the law.

LTE Band 71								
BW(MHz)	Modulation	RB Size	RB Offset	Conducted power (dBm)			Target Power + Max. Tolerance (dBm)	MPR Allowed per 3GPP(dB)
Frequency (MHz)				673	680.5	688		
Channel				133222	133297	133372		
20	QPSK	1	0	23.69	23.85	23.77	24.50	0
		1	50	23.63	23.59	23.57	24.50	0
		1	99	23.51	23.50	23.65	24.50	0
		50	0	22.53	22.57	22.69	23.50	1
		50	25	22.65	22.53	22.66	23.50	1
		50	50	22.53	22.58	22.59	23.50	1
		100	0	22.55	22.61	22.50	23.50	1
20	16-QAM	1	0	22.61	22.68	22.66	23.50	1
		1	50	22.62	22.60	22.62	23.50	1
		1	99	22.60	22.58	22.49	23.50	1
		50	0	21.56	21.61	21.60	22.50	2
		50	25	21.53	21.47	21.63	22.50	2
		50	50	21.66	21.60	21.52	22.50	2
		100	0	21.60	21.48	21.56	22.50	2

LTE Band 71								
BW(MHz)	Modulation	RB Size	RB Offset	Conducted power (dBm)			Target Power + Max. Tolerance (dBm)	MPR Allowed per 3GPP(dB)
Frequency (MHz)				670.5	680.5	690.5		
Channel				133197	133297	133397		
15	QPSK	1	0	23.63	23.51	23.56	24.50	0
		1	36	23.65	23.67	23.53	24.50	0
		1	74	23.65	23.61	23.52	24.50	0
		36	0	22.54	22.53	22.57	23.50	1
		36	18	22.65	22.65	22.67	23.50	1
		36	37	22.65	22.59	22.65	23.50	1
		75	0	22.49	22.60	22.54	23.50	1
15	16-QAM	1	0	22.66	22.59	22.61	23.50	1
		1	36	22.53	22.54	22.61	23.50	1
		1	74	22.56	22.54	22.48	23.50	1
		36	0	21.56	21.65	21.66	22.50	2
		36	18	21.55	21.53	21.56	22.50	2
		36	37	21.55	21.66	21.58	22.50	2
		75	0	21.67	21.51	21.52	22.50	2

Unless otherwise stated the results shown in this test report refer only to the sample(s) tested and such sample(s) are retained for 90 days only.
除非另有說明，此報告結果僅對測試之樣品負責，同時此樣品僅保留90天。本報告未經本公司書面許可，不可部份複製。
This document is issued by the Company subject to its General Conditions of Service printed overleaf, available on request or accessible at http://www.sgs.com.tw/Terms-and-Conditions and for electronic format documents, subject to Terms and Conditions for Electronic Documents at http://www.sgs.com.tw/Terms-and-Conditions. Attention is drawn to the limitation of liability, indemnification and jurisdiction issues defined therein. Any holder of this document is advised that information contained hereon reflects the Company's findings at the time of its intervention only and within the limits of Client's instructions, if any. The Company's sole responsibility is to its Client and this document does not exonerate parties to a transaction from exercising all their rights and obligations under the transaction documents. This document cannot be reproduced except in full, without prior written approval of the Company. Any unauthorized alteration, forgery or falsification of the content or appearance of this document is unlawful and offenders may be prosecuted to the fullest extent of the law.

LTE Band 71								
BW(MHz)	Modulation	RB Size	RB Offset	Conducted power (dBm)			Target Power + Max. Tolerance (dBm)	MPR Allowed per 3GPP(dB)
Frequency (MHz)				668	680.5	693		
Channel				133172	133297	133422		
10	QPSK	1	0	23.62	23.64	23.48	24.50	0
		1	25	23.55	23.66	23.48	24.50	0
		1	49	23.58	23.50	23.60	24.50	0
		25	0	22.62	22.55	22.47	23.50	1
		25	12	22.62	22.64	22.56	23.50	1
		25	25	22.67	22.67	22.54	23.50	1
		50	0	22.63	22.59	22.66	23.50	1
10	16-QAM	1	0	22.62	22.51	22.48	23.50	1
		1	25	22.53	22.66	22.60	23.50	1
		1	49	22.51	22.58	22.65	23.50	1
		25	0	21.53	21.53	21.56	22.50	2
		25	12	21.52	21.58	21.56	22.50	2
		25	25	21.48	21.50	21.54	22.50	2
		50	0	21.67	21.58	21.50	22.50	2

LTE Band 71								
BW(MHz)	Modulation	RB Size	RB Offset	Conducted power (dBm)			Target Power + Max. Tolerance (dBm)	MPR Allowed per 3GPP(dB)
Frequency (MHz)				665.5	680.5	695.5		
Channel				133147	133297	133447		
5	QPSK	1	0	23.51	23.57	23.66	24.50	0
		1	12	23.66	23.58	23.49	24.50	0
		1	24	23.53	23.49	23.48	24.50	0
		12	0	22.51	22.54	22.51	23.50	1
		12	6	22.59	22.60	22.56	23.50	1
		12	13	22.52	22.50	22.49	23.50	1
		25	0	22.67	22.63	22.60	23.50	1
5	16-QAM	1	0	22.67	22.55	22.65	23.50	1
		1	12	22.55	22.62	22.53	23.50	1
		1	24	22.64	22.61	22.65	23.50	1
		12	0	21.60	21.67	21.60	22.50	2
		12	6	21.60	21.57	21.61	22.50	2
		12	13	21.51	21.59	21.66	22.50	2
		25	0	21.61	21.57	21.47	22.50	2

Unless otherwise stated the results shown in this test report refer only to the sample(s) tested and such sample(s) are retained for 90 days only.
除非另有說明，此報告結果僅對測試之樣品負責，同時此樣品僅保留90天。本報告未經本公司書面許可，不可部份複製。
This document is issued by the Company subject to its General Conditions of Service printed overleaf, available on request or accessible at http://www.sgs.com.tw/Terms-and-Conditions and for electronic format documents, subject to Terms and Conditions for Electronic Documents at http://www.sgs.com.tw/Terms-and-Conditions. Attention is drawn to the limitation of liability, indemnification and jurisdiction issues defined therein. Any holder of this document is advised that information contained hereon reflects the Company's findings at the time of its intervention only and within the limits of Client's instructions, if any. The Company's sole responsibility is to its Client and this document does not exonerate parties to a transaction from exercising all their rights and obligations under the transaction documents. This document cannot be reproduced except in full, without prior written approval of the Company. Any unauthorized alteration, forgery or falsification of the content or appearance of this document is unlawful and offenders may be prosecuted to the fullest extent of the law.

5.2 WLAN

Ant1						
Band	Mode	Channel	Frequency (MHz)	Data Rate	Max. Rated Avg. Power + Max. Tolerance (dBm)	Average power (dBm)
2.45GHz	802.11b	1	2412	1Mbps	19.00	18.90
		6	2437		19.00	18.87
		11	2462		19.00	18.89
	802.11g	1	2412	6Mbps	17.00	16.84
		6	2437		17.00	16.81
		11	2462		17.00	16.74
	802.11n20-HT0	1	2412	MCS0	18.00	17.76
		6	2437		18.00	17.57
		11	2462		18.00	17.66
	802.11ac20-VHT0	1	2412	MCS0	18.00	17.71
		6	2437		18.00	17.55
		11	2462		18.00	17.63
	802.11n40-HT0	3	2422	MCS0	18.00	17.09
		6	2437		18.00	17.44
		9	2452		18.00	17.17
	802.11ac40-VHT0	3	2422	MCS0	18.00	17.05
		6	2437		18.00	17.40
		9	2452		18.00	17.08

5.3 Bluetooth

Mode	Channel	Frequency (MHz)	1Mbps		2Mbps		3Mbps	
			Max. Rated Avg. Power + Max. Tolerance (dBm)	Average power (dBm)	Max. Rated Avg. Power + Max. Tolerance (dBm)	Average power (dBm)	Max. Rated Avg. Power + Max. Tolerance (dBm)	Average power (dBm)
BR/EDR	CH 00	2402	9.00	7.76	6.00	4.79	6.00	4.83
	CH 39	2441		7.08		3.91		3.97
	CH 78	2480		7.25		4.27		4.33

Unless otherwise stated the results shown in this test report refer only to the sample(s) tested and such sample(s) are retained for 90 days only.
除非另有說明，此報告結果僅對測試之樣品負責，同時此樣品僅保留90天。本報告未經本公司書面許可，不可部份複製。
This document is issued by the Company subject to its General Conditions of Service printed overleaf, available on request or accessible at http://www.sgs.com.tw/Terms-and-Conditions and for electronic format documents, subject to Terms and Conditions for Electronic Documents at http://www.sgs.com.tw/Terms-and-Conditions. Attention is drawn to the limitation of liability, indemnification and jurisdiction issues defined therein. Any holder of this document is advised that information contained hereon reflects the Company's findings at the time of its intervention only and within the limits of Client's instructions, if any. The Company's sole responsibility is to its Client and this document does not exonerate parties to a transaction from exercising all their rights and obligations under the transaction documents. This document cannot be reproduced except in full, without prior written approval of the Company. Any unauthorized alteration, forgery or falsification of the content or appearance of this document is unlawful and offenders may be prosecuted to the fullest extent of the law.

5.4 BLE

Mode	Channel	Frequency (MHz)	GFSK	
			Max. Rated Avg.Power + Max. Tolerance (dBm)	Average Output Power (dBm)
BLE_1M	CH 00	2402	3	2.58
	CH 19	2440		2.35
	CH 39	2480		2.20

Mode	Channel	Frequency (MHz)	GFSK	
			Max. Rated Avg.Power + Max. Tolerance (dBm)	Average Output Power (dBm)
BLE_2M	CH 00	2402	3	2.60
	CH 19	2440		2.33
	CH 39	2480		2.29

Unless otherwise stated the results shown in this test report refer only to the sample(s) tested and such sample(s) are retained for 90 days only.
除非另有說明，此報告結果僅對測試之樣品負責，同時此樣品僅保留90天。本報告未經本公司書面許可，不可部份複製。
This document is issued by the Company subject to its General Conditions of Service printed overleaf, available on request or accessible at http://www.sgs.com.tw/Terms-and-Conditions and for electronic format documents, subject to Terms and Conditions for Electronic Documents at http://www.sgs.com.tw/Terms-and-Conditions. Attention is drawn to the limitation of liability, indemnification and jurisdiction issues defined therein. Any holder of this document is advised that information contained hereon reflects the Company's findings at the time of its intervention only and within the limits of Client's instructions, if any. The Company's sole responsibility is to its Client and this document does not exonerate parties to a transaction from exercising all their rights and obligations under the transaction documents. This document cannot be reproduced except in full, without prior written approval of the Company. Any unauthorized alteration, forgery or falsification of the content or appearance of this document is unlawful and offenders may be prosecuted to the fullest extent of the law.

6 DUTY CYCLE

2.4G b duty	(12.18/12.33=0.987) Scaling Factor=1.013

BT duty	(2.88/3.76=0.763) Scaling Factor=1.31

Unless otherwise stated the results shown in this test report refer only to the sample(s) tested and such sample(s) are retained for 90 days only.
除非另有說明，此報告結果僅對測試之樣品負責，同時此樣品僅保留90天。本報告未經本公司書面許可，不可部份複製。
This document is issued by the Company subject to its General Conditions of Service printed overleaf, available on request or accessible at http://www.sgs.com.tw/Terms-and-Conditions and for electronic format documents, subject to Terms and Conditions for Electronic Documents at http://www.sgs.com.tw/Terms-and-Conditions. Attention is drawn to the limitation of liability, indemnification and jurisdiction issues defined therein. Any holder of this document is advised that information contained hereon reflects the Company's findings at the time of its intervention only and within the limits of Client's instructions, if any. The Company's sole responsibility is to its Client and this document does not exonerate parties to a transaction from exercising all their rights and obligations under the transaction documents. This document cannot be reproduced except in full, without prior written approval of the Company. Any unauthorized alteration, forgery or falsification of the content or appearance of this document is unlawful and offenders may be prosecuted to the fullest extent of the law.

7 SUMMARY OF RESULTS

7.1 Decision rules

Reported measurement data comply with Test Methodology in section 1.1.
Determining compliance shall be based on the results of the compliance measurement, not taking into account measurement instrumentation uncertainty.

7.2 Summary of SAR Results

WWAN

Next to mouth exposure (1g)

Band	Bandwidth (MHz)	Modulation	RB Size	RB start	Position	Distance (mm)	Channel	Freq. (MHz)	Max. Rated Avg. Power + Max. Tolerance (dBm)	Measured Avg. Power (dBm)	Scaling	Averaged SAR over 1g (W/kg)		ID
												Measured	Reported	
LTE Band 2	20MHz	QPSK	1	0	Front Surface	10	18700	1860	24.50	23.96	113.24%	0.448	0.507	001
LTE Band 2			1	0	Front Surface	10	18900	1880	24.50	23.57	123.88%	0.394	0.488	-
LTE Band 2			1	0	Front Surface	10	19100	1900	24.50	23.55	124.45%	0.401	0.499	-
LTE Band 2			50	0	Front Surface	10	18700	1860	23.50	22.95	113.50%	0.364	0.413	-
LTE Band 2			50	0	Front Surface	10	18900	1860	23.50	22.83	116.68%	0.352	0.411	-
LTE Band 2			50	50	Front Surface	10	19100	1860	23.50	22.82	116.95%	0.343	0.401	-
2nd source Spotcheck			1	0	Front Surface	10	18700	1860	24.50	23.96	113.24%	0.437	0.495	-
LTE Band 4	20MHz	QPSK	1	0	Front Surface	10	20050	1720	24.50	23.93	114.02%	0.843	0.961	002
LTE Band 4			1	0	Front Surface	10	20175	1732.5	24.50	23.72	119.67%	0.808	0.967	-
LTE Band 4			1	0	Front Surface	10	20300	1745	24.50	23.86	115.88%	0.819	0.949	-
LTE Band 4			50	0	Front Surface	10	20050	1720	23.50	23.07	110.41%	0.728	0.804	-
LTE Band 4			50	0	Front Surface	10	20175	1732.5	23.50	22.95	113.50%	0.696	0.790	-
LTE Band 4			50	0	Front Surface	10	20300	1745	23.50	22.83	116.68%	0.677	0.790	-
LTE Band 4			100RB		Front Surface	10	20300	1745	23.50	22.93	114.02%	0.716	0.816	-
2nd source Spotcheck			1	0	Front Surface	10	20050	1720	24.50	23.93	114.02%	0.824	0.940	-
LTE Band 12	10MHz	QPSK	1	0	Front Surface	10	23060	704	24.50	23.62	122.46%	0.255	0.312	-
LTE Band 12			1	0	Front Surface	10	23095	707.5	24.50	23.79	117.76%	0.291	0.343	003
LTE Band 12			1	0	Front Surface	10	23130	711	24.50	23.68	120.78%	0.268	0.324	-
LTE Band 12			25	12	Front Surface	10	23060	704	23.50	22.48	126.47%	0.159	0.201	-
LTE Band 12			25	12	Front Surface	10	23095	707.5	23.50	22.58	123.59%	0.171	0.211	-
LTE Band 12			25	0	Front Surface	10	23130	711	23.50	22.59	123.31%	0.178	0.219	-
LTE Band 12			50RB		Front Surface	10	23060	704	23.50	22.56	124.17%	0.164	0.204	-
2nd source Spotcheck			1	0	Front Surface	10	23095	707.5	24.50	23.79	117.76%	0.269	0.317	-
LTE Band 66	20MHz	QPSK	1	0	Front Surface	10	132072	1720	24.50	23.89	115.08%	0.900	1.036	-
LTE Band 66			1	0	Front Surface	10	132322	1745	24.50	23.95	113.50%	0.924	1.049	004
LTE Band 66			1	0	Front Surface	10	132572	1770	24.50	23.81	117.22%	0.893	1.047	-
LTE Band 66			50	0	Front Surface	10	132072	1720	23.50	22.99	112.46%	0.715	0.804	-
LTE Band 66			50	0	Front Surface	10	132322	1745	23.50	23.05	110.92%	0.723	0.802	-
LTE Band 66			50	0	Front Surface	10	132572	1770	23.50	22.91	114.55%	0.709	0.812	-
LTE Band 66			100RB		Front Surface	10	132572	1770	23.50	22.80	117.49%	0.699	0.821	-
Repeat			1	0	Front Surface	10	132322	1745	24.50	23.95	113.50%	0.901	1.023	-
2nd source Spotcheck			1	0	Front Surface	10	132322	1745	24.50	23.95	113.50%	0.904	1.026	-
LTE Band 71	20MHz	QPSK	1	0	Front Surface	10	133222	673	24.50	23.69	120.50%	0.203	0.245	-
LTE Band 71			1	0	Front Surface	10	133297	680.5	24.50	23.85	116.14%	0.231	0.268	005
LTE Band 71			1	0	Front Surface	10	133372	688	24.50	23.77	118.30%	0.216	0.256	-
LTE Band 71			50	25	Front Surface	10	133222	673	23.50	22.65	121.62%	0.155	0.189	-
LTE Band 71			50	50	Front Surface	10	133297	680.5	23.50	22.58	123.59%	0.137	0.169	-
LTE Band 71			50	0	Front Surface	10	133372	688	23.50	22.69	120.50%	0.168	0.202	-
LTE Band 71			100RB		Front Surface	10	133297	680.5	23.50	22.61	122.74%	0.161	0.198	-
2nd source Spotcheck			1	0	Front Surface	10	133297	680.5	24.50	23.85	116.14%	0.223	0.259	-

* - worst case spot check for 2nd source

** - repeated at the highest SAR measurement according to the KDB 865664 D01

Unless otherwise stated the results shown in this test report refer only to the sample(s) tested and such sample(s) are retained for 90 days only.
除非另有說明，此報告結果僅對測試之樣品負責，同時此樣品僅保留90天。本報告未經本公司書面許可，不可部份複製。
This document is issued by the Company subject to its General Conditions of Service printed overleaf, available on request or accessible at http://www.sgs.com.tw/Terms-and-Conditions and for electronic format documents, subject to Terms and Conditions for Electronic Documents at http://www.sgs.com.tw/Terms-and-Conditions. Attention is drawn to the limitation of liability, indemnification and jurisdiction issues defined therein. Any holder of this document is advised that information contained hereon reflects the Company's findings at the time of its intervention only and within the limits of Client's instructions, if any. The Company's sole responsibility is to its Client and this document does not exonerate parties to a transaction from exercising all their rights and obligations under the transaction documents. This document cannot be reproduced except in full, without prior written approval of the Company. Any unauthorized alteration, forgery or falsification of the content or appearance of this document is unlawful and offenders may be prosecuted to the fullest extent of the law.

Extremity exposure (10g)

Band	Bandwidth (MHz)	Modulation	RB Size	RB start	Position	Distance (mm)	Channel	Freq. (MHz)	Max. Rated Avg. Power + Max. Tolerance (dBm)	Measured Avg. Power (dBm)	Scaling	Averaged SAR over 10g (W/kg)		ID
												Measured	Reported	
LTE Band 2	20MHz	QPSK	1	0	Back Surface	0	18700	1860	24.50	23.96	113.24%	0.536	0.607	006
LTE Band 2			1	0	Back Surface	0	18900	1880	24.50	23.57	123.88%	0.472	0.585	-
LTE Band 2			1	0	Back Surface	0	19100	1900	24.50	23.55	124.45%	0.491	0.611	-
LTE Band 2			50	0	Back Surface	0	18700	1860	23.50	22.95	113.50%	0.441	0.501	-
LTE Band 2			50	0	Back Surface	0	18900	1860	23.50	22.83	116.68%	0.423	0.494	-
LTE Band 2			50	50	Back Surface	0	19100	1860	23.50	22.82	116.95%	0.416	0.487	-
LTE Band 2			100RB		Back Surface	0	18700	1860	23.50	22.89	115.08%	0.429	0.494	-
2nd source Spotcheck			1	0	Back Surface	0	18700	1860	24.50	23.96	113.24%	0.497	0.563	-
LTE Band 4	20MHz	QPSK	1	0	Back Surface	0	20050	1720	24.50	23.93	114.02%	1.370	1.562	-
LTE Band 4			1	0	Back Surface	0	20175	1732.5	24.50	23.72	119.67%	1.590	1.903	007
LTE Band 4			1	0	Back Surface	0	20300	1745	24.50	23.86	115.88%	1.370	1.588	-
LTE Band 4			50	0	Back Surface	0	20050	1720	23.50	23.07	110.41%	1.340	1.479	-
LTE Band 4			50	0	Back Surface	0	20175	1732.5	23.50	22.95	113.50%	1.410	1.600	-
LTE Band 4			50	0	Back Surface	0	20300	1745	23.50	22.83	116.68%	1.480	1.727	-
LTE Band 4			100RB		Back Surface	0	20300	1745	23.50	22.93	114.02%	1.520	1.733	-
Repeat			1	0	Back Surface	0	20175	1732.5	24.50	23.72	119.67%	1.480	1.771	-
2nd source Spotcheck			1	0	Back Surface	0	20175	1732.5	24.50	23.72	119.67%	1.560	1.867	-
LTE Band 12	10MHz	QPSK	1	0	Back Surface	0	23060	704	24.50	23.62	122.46%	0.288	0.353	-
LTE Band 12			1	0	Back Surface	0	23095	707.5	24.50	23.79	117.76%	0.314	0.370	008
LTE Band 12			1	0	Back Surface	0	23130	711	24.50	23.68	120.78%	0.296	0.358	-
LTE Band 12			25	12	Back Surface	0	23060	704	23.50	22.48	126.47%	0.234	0.296	-
LTE Band 12			25	12	Back Surface	0	23095	707.5	23.50	22.58	123.59%	0.246	0.304	-
LTE Band 12			25	0	Back Surface	0	23130	711	23.50	22.59	123.31%	0.258	0.318	-
LTE Band 12			50RB		Back Surface	0	23060	704	23.50	22.56	124.17%	0.241	0.299	-
2nd source Spotcheck			1	0	Back Surface	0	23095	707.5	24.50	23.79	117.76%	0.283	0.333	-
LTE Band 66	20MHz	QPSK	1	0	Back Surface	0	132072	1720	24.50	23.89	115.08%	0.987	1.136	-
LTE Band 66			1	0	Back Surface	0	132322	1745	24.50	23.95	113.50%	1.090	1.237	009
LTE Band 66			1	0	Back Surface	0	132572	1770	24.50	23.81	117.22%	0.929	1.089	-
LTE Band 66			50	0	Back Surface	0	132072	1720	23.50	22.99	112.46%	0.772	0.868	-
LTE Band 66			50	0	Back Surface	0	132322	1745	23.50	23.05	110.92%	0.788	0.874	-
LTE Band 66			50	0	Back Surface	0	132572	1770	23.50	22.91	114.55%	0.763	0.874	-
LTE Band 66			100RB		Back Surface	0	132572	1770	23.50	22.80	117.49%	0.779	0.915	-
Repeat			1	0	Back Surface	0	132322	1745	24.50	23.95	113.50%	0.994	1.128	-
2nd source Spotcheck			1	0	Back Surface	0	132322	1745	24.50	23.95	113.50%	0.984	1.117	-
LTE Band 71	20MHz	QPSK	1	0	Back Surface	0	133222	673	24.50	23.69	120.50%	0.148	0.178	-
LTE Band 71			1	0	Back Surface	0	133297	680.5	24.50	23.85	116.14%	0.156	0.181	010
LTE Band 71			1	0	Back Surface	0	133372	688	24.50	23.77	118.30%	0.142	0.168	-
LTE Band 71			50	25	Back Surface	0	133222	673	23.50	22.65	121.62%	0.117	0.142	-
LTE Band 71			50	50	Back Surface	0	133297	680.5	23.50	22.58	123.59%	0.107	0.132	-
LTE Band 71			50	0	Back Surface	0	133372	688	23.50	22.69	120.50%	0.124	0.149	-
LTE Band 71			100RB		Back Surface	0	133297	680.5	23.50	22.61	122.74%	0.118	0.145	-
2nd source Spotcheck			1	0	Back Surface	0	133297	680.5	24.50	23.85	116.14%	0.137	0.159	-

* - worst case spot check for 2nd source

** - repeated at the highest SAR measurement according to the KDB 865664 D01

Unless otherwise stated the results shown in this test report refer only to the sample(s) tested and such sample(s) are retained for 90 days only.
除非另有說明，此報告結果僅對測試之樣品負責，同時此樣品僅保留90天。本報告未經本公司書面許可，不可部份複製。
This document is issued by the Company subject to its General Conditions of Service printed overleaf, available on request or accessible at http://www.sgs.com.tw/Terms-and-Conditions and for electronic format documents, subject to Terms and Conditions for Electronic Documents at http://www.sgs.com.tw/Terms-and-Conditions. Attention is drawn to the limitation of liability, indemnification and jurisdiction issues defined therein. Any holder of this document is advised that information contained hereon reflects the Company's findings at the time of its intervention only and within the limits of Client's instructions, if any. The Company's sole responsibility is to its Client and this document does not exonerate parties to a transaction from exercising all their rights and obligations under the transaction documents. This document cannot be reproduced except in full, without prior written approval of the Company. Any unauthorized alteration, forgery or falsification of the content or appearance of this document is unlawful and offenders may be prosecuted to the fullest extent of the law.

WLAN

Next to mouth exposure (1g)

Band	Antenna	Position	Distance (mm)	Channel	Freq. (MHz)	Max. Rated Avg. Power + Max. Tolerance (dBm)	Measured Avg. Power (dBm)	Duty cycle scaling	Power scaling	Averaged SAR over 1g (W/kg)		ID
										Measured	Reported	
WLAN 802.11b	Ant1	Front Surface	10	1	2412	19.00	18.90	1.01	102.33%	0.483	0.501	-
WLAN 802.11b	Ant1	Front Surface	10	6	2437	19.00	18.87	1.01	103.04%	0.466	0.486	-
WLAN 802.11b	Ant1	Front Surface	10	11	2462	19.00	18.89	1.01	102.57%	0.492	0.511	011
2nd source Spotcheck	Ant1	Front Surface	10	11	2462	19.00	18.89	1.01	102.57%	0.473	0.491	-
Band	Antenna	Position	Distance (mm)	Channel	Freq. (MHz)	Max. Rated Avg. Power + Max. Tolerance (dBm)	Measured Avg. Power (dBm)	Duty cycle scaling	Power scaling	Averaged SAR over 1g (W/kg)		ID
										Measured	Reported	
Bluetooth(GFSK)	Ant1	Front Surface	10	00	2402	9.00	7.76	1.31	133.05%	0.013	0.023	012
Bluetooth(GFSK)	Ant1	Front Surface	10	39	2441	9.00	7.08	1.31	155.60%	0.009	0.018	-
Bluetooth(GFSK)	Ant1	Front Surface	10	78	2480	9.00	7.25	1.31	149.62%	0.007	0.014	-
2nd source Spotcheck	Ant1	Front Surface	10	00	2402	9.00	7.76	1.31	133.05%	0.010	0.017	-

* - worst case spot check for 2nd source

Extremity exposure (10g)

Band	Antenna	Position	Distance (mm)	Channel	Freq. (MHz)	Max. Rated Avg. Power + Max. Tolerance (dBm)	Measured Avg. Power (dBm)	Duty cycle scaling	Power scaling	Averaged SAR over 10g (W/kg)		ID
										Measured	Reported	
WLAN 802.11b	Ant1	Back Surface	0	1	2412	19.00	18.90	1.01	102.33%	0.395	0.409	-
WLAN 802.11b	Ant1	Back Surface	0	6	2437	19.00	18.87	1.01	103.04%	0.381	0.398	-
WLAN 802.11b	Ant1	Back Surface	0	11	2462	19.00	18.89	1.01	102.57%	0.419	0.435	013
2nd source Spotcheck	Ant1	Back Surface	0	11	2462	19.00	18.89	1.01	102.57%	0.397	0.412	-
Band	Antenna	Position	Distance (mm)	Channel	Freq. (MHz)	Max. Rated Avg. Power + Max. Tolerance (dBm)	Measured Avg. Power (dBm)	Duty cycle scaling	Power scaling	Averaged SAR over 10g (W/kg)		ID
										Measured	Reported	
Bluetooth(GFSK)	Ant1	Back Surface	0	00	2402	9.00	7.76	1.31	133.05%	0.076	0.132	014
Bluetooth(GFSK)	Ant1	Back Surface	0	39	2441	9.00	7.08	1.31	155.60%	0.055	0.112	-
Bluetooth(GFSK)	Ant1	Back Surface	0	78	2480	9.00	7.25	1.31	149.62%	0.063	0.123	-
2nd source Spotcheck	Ant1	Back Surface	0	00	2402	3.00	7.76	1.31	33.42%	0.064	0.028	-

* - worst case spot check for 2nd source

Note:

1. Reported SAR = measured SAR * Power scaling * Duty cycle scaling

7.3 Reporting statements of conformity

The conformity statement in this report is based solely on the test results, measurement uncertainty is excluded.

7.4 Conclusion

The device is compliant because all the standalone results are less than their corresponding criteria.

Unless otherwise stated the results shown in this test report refer only to the sample(s) tested and such sample(s) are retained for 90 days only.
除非另有說明，此報告結果僅對測試之樣品負責，同時此樣品僅保留90天。本報告未經本公司書面許可，不可部份複製。
This document is issued by the Company subject to its General Conditions of Service printed overleaf, available on request or accessible at http://www.sgs.com.tw/Terms-and-Conditions and for electronic format documents, subject to Terms and Conditions for Electronic Documents at http://www.sgs.com.tw/Terms-and-Conditions. Attention is drawn to the limitation of liability, indemnification and jurisdiction issues defined therein. Any holder of this document is advised that information contained hereon reflects the Company's findings at the time of its intervention only and within the limits of Client's instructions, if any. The Company's sole responsibility is to its Client and this document does not exonerate parties to a transaction from exercising all their rights and obligations under the transaction documents. This document cannot be reproduced except in full, without prior written approval of the Company. Any unauthorized alteration, forgery or falsification of the content or appearance of this document is unlawful and offenders may be prosecuted to the fullest extent of the law.

8 SIMULTANEOUS TRANSMISSION ANALYSIS

8.1 Simultaneous Transmission Scenarios:

Simultaneous Transmission configurations
WWAN+BT
WWAN+WLAN

8.2 Estimated SAR calculation

According to KDB447498 D01v06 – When standalone SAR test exclusion applies to an antenna that transmits simultaneously with other antennas, the standalone SAR must be estimated according to following to determine simultaneous transmission SAR test exclusion:

$$\text{Estimated SAR} = \frac{\text{Max. tune up power (mW)}}{\text{Min. test separation distance(mm)}} \times \frac{\sqrt{\text{f(GHz)}}}{7.5}$$

If the minimum test separation distance is < 5mm, a distance of 5mm is used for estimated SAR calculation. When the test separation distance is >50mm, the 0.4W/kg is used for SAR-1g.

8.3 SPLSR evaluation and analysis

Per KDB447498D01, when the sum of SAR is larger than the limit, SAR test exclusion is determined by the SAR sum to peak location separation ratio(SPLSR).

The simultaneous transmitting antennas in each operating mode and exposure condition combination must be considered one pair at a time to determine the SAR to peak location separation ratio to qualify for test exclusion.

The ratio is determined by **(SAR1 + SAR2)^1.5/Ri**, rounded to two decimal digits, and must be **≤ 0.04** for all antenna pairs in the configuration to qualify for 1-g SAR test exclusion.

SAR1 and SAR2 are the highest reported or estimated SAR for each antenna in the pair, and Ri is the separation distance between the peak SAR locations for the antenna pair in mm.

When standalone test exclusion applies, SAR is estimated; the peak location is assumed to be at the feed-point or geometric center of the antenna.

Unless otherwise stated the results shown in this test report refer only to the sample(s) tested and such sample(s) are retained for 90 days only.
除非另有說明，此報告結果僅對測試之樣品負責，同時此樣品僅保留90天。本報告未經本公司書面許可，不可部份複製。
This document is issued by the Company subject to its General Conditions of Service printed overleaf, available on request or accessible at http://www.sgs.com.tw/Terms-and-Conditions and for electronic format documents, subject to Terms and Conditions for Electronic Documents at http://www.sgs.com.tw/Terms-and-Conditions. Attention is drawn to the limitation of liability, indemnification and jurisdiction issues defined therein. Any holder of this document is advised that information contained hereon reflects the Company's findings at the time of its intervention only and within the limits of Client's instructions, if any. The Company's sole responsibility is to its Client and this document does not exonerate parties to a transaction from exercising all their rights and obligations under the transaction documents. This document cannot be reproduced except in full, without prior written approval of the Company. Any unauthorized alteration, forgery or falsification of the content or appearance of this document is unlawful and offenders may be prosecuted to the fullest extent of the law.

Simultaneous Transmission Combination

Next to mouth exposure (1g)

			FCC Reported SAR			Scenario1	Scenario2
	Exposure Position		1	2	3	1+3	1+2
			WWAN	2.4GHz WLAN Ant1	Bluetooth Ant1	Summed	Summed
			1g SAR (W/kg)	1g SAR (W/kg)	1g SAR (W/kg)	1g SAR (W/kg)	1g SAR (W/kg)
LTE Band 2	Front Surface	10	0.507	0.511	0.023	0.530	1.018
LTE Band 4	Front Surface	10	0.967	0.511	0.023	0.990	1.478
LTE Band 12	Front Surface	10	0.343	0.511	0.023	0.366	0.854
LTE Band 66	Front Surface	10	1.049	0.511	0.023	1.072	1.560
LTE Band 71	Front Surface	10	0.268	0.511	0.023	0.291	0.779

Extremity exposure (10g)

			FCC Reported SAR			Scenario1	Scenario2
	Exposure Position		1	2	3	1+3	1+2
			WWAN	2.4GHz WLAN Ant1	Bluetooth Ant1	Summed	Summed
			10g SAR (W/kg)	10g SAR (W/kg)	10g SAR (W/kg)	10g SAR (W/kg)	10g SAR (W/kg)
LTE Band 2	Back Surface	0	0.611	0.435	0.132	0.743	1.046
LTE Band 4	Back Surface	0	1.903	0.435	0.132	2.035	2.338
LTE Band 12	Back Surface	0	0.370	0.435	0.132	0.502	0.805
LTE Band 66	Back Surface	0	1.237	0.435	0.132	1.369	1.672
LTE Band 71	Back Surface	0	0.181	0.435	0.132	0.313	0.616

8.4 Conclusion

The simultaneous transmission is compliant because the SAR sum is less than their corresponding criteria.

Unless otherwise stated the results shown in this test report refer only to the sample(s) tested and such sample(s) are retained for 90 days only.
除非另有說明，此報告結果僅對測試之樣品負責，同時此樣品僅保留90天。本報告未經本公司書面許可，不可部份複製。
This document is issued by the Company subject to its General Conditions of Service printed overleaf, available on request or accessible at http://www.sgs.com.tw/Terms-and-Conditions and for electronic format documents, subject to Terms and Conditions for Electronic Documents at http://www.sgs.com.tw/Terms-and-Conditions. Attention is drawn to the limitation of liability, indemnification and jurisdiction issues defined therein. Any holder of this document is advised that information contained hereon reflects the Company's findings at the time of its intervention only and within the limits of Client's instructions, if any. The Company's sole responsibility is to its Client and this document does not exonerate parties to a transaction from exercising all their rights and obligations under the transaction documents. This document cannot be reproduced except in full, without prior written approval of the Company. Any unauthorized alteration, forgery or falsification of the content or appearance of this document is unlawful and offenders may be prosecuted to the fullest extent of the law.

9 INSTRUMENTS LIST

Equipment List					
Manufacturer	Device	Type	Serial number	Date of last calibration	Date of next calibration
SPEAG	Data acquisition Electronics	DAE4	1719	Jan/17/2024	Jan/16/2025
SPEAG	Dosimetric E-Field Probe	EX3DV4	7642	Feb/21/2024	Feb/20/2025
SPEAG	System Validation Dipole	D750V3	1015	Sep/18/2023	Sep/17/2024
SPEAG	System Validation Dipole	D1750V2	1008	Sep/19/2023	Sep/18/2024
SPEAG	System Validation Dipole	D1900V2	5d056	Aug/25/2023	Aug/24/2024
SPEAG	System Validation Dipole	D2450V2	728	Aug/28/2023	Aug/27/2024
R&S	MXG Analog Signal Generator	SMB100A03	182012	May/23/2023	May/22/2024
Agilent	Dual-directional coupler	772D	MY46151258	Sep/26/2023	Sep/25/2024
Agilent	Dual-directional coupler	778D	MY46151242	Sep/26/2023	Sep/25/2024
EMCI	Amplifier	ZHL-42	980189	Calibration not required	Calibration not required
R&S	Power Meter	NRX	102034	Dec/13/2023	Dec/12/2024
R&S	Power Sensor	NRP18S	101974	Nov/21/2023	Nov/20/2024
R&S	Power Sensor	NRP18S	109066	Oct/23/2023	Oct/22/2024
SPEAG	Dielectric Assessment Kit	DAK-3.5	1342	May/23/2023	May/22/2024
Agilent	Network Analyzer	E5071C	MY46107530	Jun/01/2023	May/31/2024
Keysight	Economy calibration kit	85032E	MY61410222	Mar/18/2024	Mar/17/2025
SPEAG	Software	DASY 52 V52.10.4.1527	N/A	Calibration not required	Calibration not required
SPEAG	Phantom	ELI	N/A	Calibration not required	Calibration not required
Anritsu	Radio Communication Test	MT8820C	6201061049	Nov/02/2023	Nov/01/2024
TECPEL	Digital thermometer	DTM-303A	TP190085	Dec/19/2023	Dec/18/2024

Unless otherwise stated the results shown in this test report refer only to the sample(s) tested and such sample(s) are retained for 90 days only.
除非另有說明，此報告結果僅對測試之樣品負責，同時此樣品僅保留90天。本報告未經本公司書面許可，不可部份複製。
This document is issued by the Company subject to its General Conditions of Service printed overleaf, available on request or accessible at http://www.sgs.com.tw/Terms-and-Conditions and for electronic format documents, subject to Terms and Conditions for Electronic Documents at http://www.sgs.com.tw/Terms-and-Conditions. Attention is drawn to the limitation of liability, indemnification and jurisdiction issues defined therein. Any holder of this document is advised that information contained hereon reflects the Company's findings at the time of its intervention only and within the limits of Client's instructions, if any. The Company's sole responsibility is to its Client and this document does not exonerate parties to a transaction from exercising all their rights and obligations under the transaction documents. This document cannot be reproduced except in full, without prior written approval of the Company. Any unauthorized alteration, forgery or falsification of the content or appearance of this document is unlawful and offenders may be prosecuted to the fullest extent of the law.

10 UNCERTAINTY BUDGET

Measurement Uncertainty evaluation template for DUT SAR test (0.3-3G)

A	c	D	e		f	g	h=c * f / e	i=c * g / e	k
Source of Uncertainty	Tolerance/ Uncertainty	Probability Distributio	Div	Div Value	ci (1g)	ci (10g)	Standard uncertainty	Standard uncertainty	vi, or Veff
Measurement system									
Probe calibration	6.00%	N	1	1	1	1	6.00%	6.00%	∞
Isotropy , Axial	3.50%	R	√3	1.732	1	1	2.02%	2.02%	∞
Isotropy, Hemispherical	9.60%	R	√3	1.732	1	1	5.54%	5.54%	∞
Modulation Response	2.40%	R	√3	1.732	1	1	1.40%	1.40%	∞
Boundary Effect	1.00%	R	√3	1.732	1	1	0.58%	0.58%	∞
Linearity	4.70%	R	√3	1.732	1	1	2.71%	2.71%	∞
Detection Limits	1.00%	R	√3	1.732	1	1	0.58%	0.58%	∞
Readout Electronics	0.30%	N	1	1	1	1	0.30%	0.30%	∞
Response time	0.80%	R	√3	1.732	1	1	0.46%	0.46%	∞
Integration Time	2.60%	R	√3	1.732	1	1	1.50%	1.50%	∞
Measurement drift (class A evaluation)	1.75%	R	√3	1.732	1	1	1.01%	1.01%	∞
RF ambient condition - noise	3.00%	R	√3	1.732	1	1	1.73%	1.73%	∞
RF ambient conditions - reflections	3.00%	R	√3	1.732	1	1	1.73%	1.73%	∞
Probe positioner Mechanical restrictions	0.40%	R	√3	1.732	1	1	0.23%	0.23%	∞
Probe Positioning with respect to phantom shell	2.90%	R	√3	1.732	1	1	1.67%	1.67%	∞
Post-processing	1.00%	R	√3	1.732	1	1	0.58%	0.58%	∞
Max SAR Eval	1.00%	R	√3	1.732	1	1	0.58%	0.58%	∞
Test Sample related									
Test sample positioning	2.90%	N	1	1	1	1	2.90%	2.90%	M-1
Device Holder Uncertainty	3.60%	N	1	1	1	1	3.60%	3.60%	M-1
Drift of output power	5.00%	R	√3	1.732	1	1	2.89%	2.89%	∞
Phantom and Setup									
Phantom Uncertainty	4.00%	R	√3	1.732	1	1	2.31%	2.31%	∞
Liquid permittivity (mea.)	2.53%	N	1	1	0.64	0.43	1.62%	1.09%	M
Liquid Conductivity (mea.)	3.63%	N	1	1	0.6	0.49	2.18%	1.78%	M
Combined standard uncertainty		RSS					11.74%	11.60%	
Expant uncertainty (95% confidence interval), K=2							23.47%	23.19%	

Unless otherwise stated the results shown in this test report refer only to the sample(s) tested and such sample(s) are retained for 90 days only.
除非另有說明，此報告結果僅對測試之樣品負責，同時此樣品僅保留90天。本報告未經本公司書面許可，不可部份複製。
This document is issued by the Company subject to its General Conditions of Service printed overleaf, available on request or accessible at http://www.sgs.com.tw/Terms-and-Conditions and for electronic format documents, subject to Terms and Conditions for Electronic Documents at http://www.sgs.com.tw/Terms-and-Conditions. Attention is drawn to the limitation of liability, indemnification and jurisdiction issues defined therein. Any holder of this document is advised that information contained hereon reflects the Company's findings at the time of its intervention only and within the limits of Client's instructions, if any. The Company's sole responsibility is to its Client and this document does not exonerate parties to a transaction from exercising all their rights and obligations under the transaction documents. This document cannot be reproduced except in full, without prior written approval of the Company. Any unauthorized alteration, forgery or falsification of the content or appearance of this document is unlawful and offenders may be prosecuted to the fullest extent of the law.

11 SAR MEASUREMENT RESULTS

Date: 2024/4/10

ID: 001
Report No. :TESA2402000084ES
LTE Band 2 (20MHz)_Body_Front Surface_CH 18700_QPSK_1-0_10mm
Communication System: LTE; Frequency: 1860 MHz;Duty Cycle= 1:1
Medium parameters used: f = 1860 MHz; σ = 1.432 S/m; ε_r = 40.984; ρ = 1000 kg/m^3
Phantom section: Flat Section
Ambient temperature: 22.3°C; Liquid temperature: 22.1°C

DASY5 Configuration:

- Probe: EX3DV4 - SN7642; ConvF(8.16, 8.04, 7.99) @ 1860 MHz; Calibrated: 2024/2/21
- Sensor-Surface: 2mm (Mechanical Surface Detection)
- Electronics: DAE4 Sn1719; Calibrated: 2024/1/17
- Phantom: ELI
- DASY52 52.10.4(1527); SEMCAD X 14.6.14(7483)

Area Scan (61x81x1): Interpolated grid: dx=15 mm, dy=15 mm
Maximum value of SAR (interpolated) = 0.707 W/kg

Zoom Scan (5x5x7)/Cube 0: Measurement grid: dx=8mm, dy=8mm, dz=5mm
Reference Value = 11.12 V/m; Power Drift = 0.01 dB
Peak SAR (extrapolated) = 0.742 W/kg
SAR(1 g) = 0.448 W/kg; SAR(10 g) = 0.260 W/kg
Smallest distance from peaks to all points 3 dB below = 12.8 mm
Ratio of SAR at M2 to SAR at M1 = 62.4%
Maximum value of SAR (measured) = 0.598 W/kg

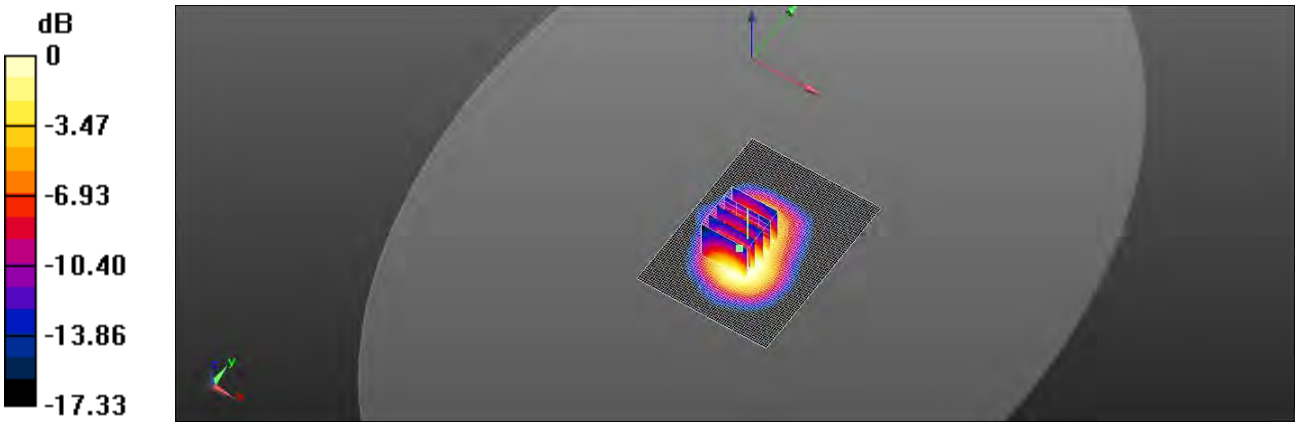

0 dB = 0.598 W/kg = -2.23 dBW/kg

Unless otherwise stated the results shown in this test report refer only to the sample(s) tested and such sample(s) are retained for 90 days only.
除非另有說明，此報告結果僅對測試之樣品負責，同時此樣品僅保留90天。本報告未經本公司書面許可，不可部份複製。
This document is issued by the Company subject to its General Conditions of Service printed overleaf, available on request or accessible at http://www.sgs.com.tw/Terms-and-Conditions and for electronic format documents, subject to Terms and Conditions for Electronic Documents at http://www.sgs.com.tw/Terms-and-Conditions. Attention is drawn to the limitation of liability, indemnification and jurisdiction issues defined therein. Any holder of this document is advised that information contained hereon reflects the Company's findings at the time of its intervention only and within the limits of Client's instructions, if any. The Company's sole responsibility is to its Client and this document does not exonerate parties to a transaction from exercising all their rights and obligations under the transaction documents. This document cannot be reproduced except in full, without prior written approval of the Company. Any unauthorized alteration, forgery or falsification of the content or appearance of this document is unlawful and offenders may be prosecuted to the fullest extent of the law.

Date: 2024/4/10

ID: 002
Report No. :TESA2402000084ES
LTE Band 4 (20MHz)_Body_Front Surface_CH 20050_QPSK_1-0_10mm
Communication System: LTE; Frequency: 1720 MHz;Duty Cycle= 1:1
Medium parameters used: f = 1720 MHz; σ = 1.368 S/m; ε_r = 41.086; ρ = 1000 kg/m^3
Phantom section: Flat Section
Ambient temperature: 22.3°C; Liquid temperature: 22.1°C

DASY5 Configuration:

- Probe: EX3DV4 - SN7642; ConvF(8.35, 8.21, 8.17) @ 1720 MHz; Calibrated: 2024/2/21
- Sensor-Surface: 2mm (Mechanical Surface Detection)
- Electronics: DAE4 Sn1719; Calibrated: 2024/1/17
- Phantom: ELI
- DASY52 52.10.4(1527); SEMCAD X 14.6.14(7483)

Area Scan (61x81x1): Interpolated grid: dx=15 mm, dy=15 mm
Maximum value of SAR (interpolated) = 1.41 W/kg

Zoom Scan (5x5x7)/Cube 0: Measurement grid: dx=8mm, dy=8mm, dz=5mm
Reference Value = 28.22 V/m; Power Drift = -0.02 dB
Peak SAR (extrapolated) = 1.46 W/kg
SAR(1 g) = 0.843 W/kg; SAR(10 g) = 0.470 W/kg
Smallest distance from peaks to all points 3 dB below = 12.9 mm
Ratio of SAR at M2 to SAR at M1 = 62.3%
Maximum value of SAR (measured) = 1.17 W/kg

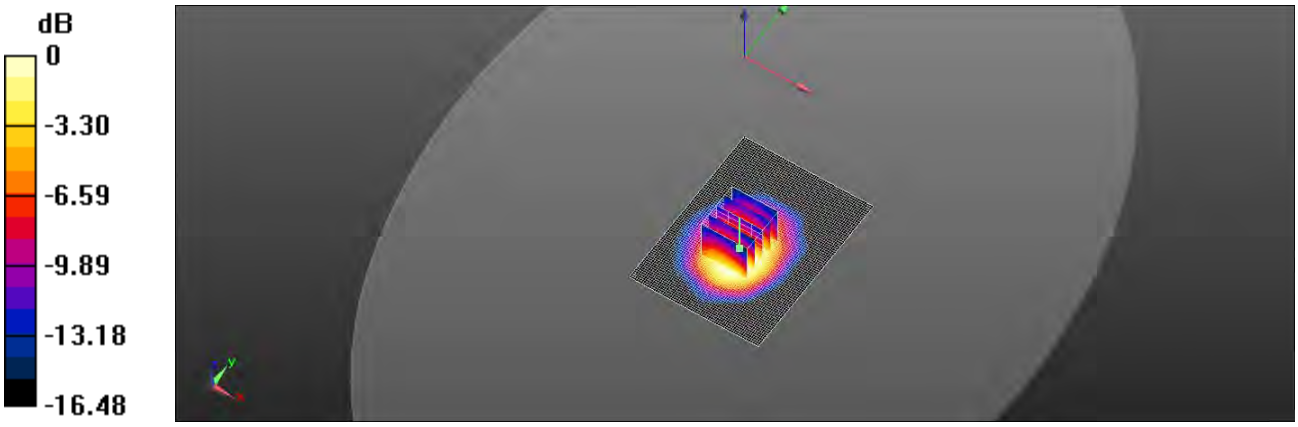

0 dB = 1.17 W/kg = 0.67 dBW/kg

Unless otherwise stated the results shown in this test report refer only to the sample(s) tested and such sample(s) are retained for 90 days only.
除非另有說明，此報告結果僅對測試之樣品負責，同時此樣品僅保留90天。本報告未經本公司書面許可，不可部份複製。
This document is issued by the Company subject to its General Conditions of Service printed overleaf, available on request or accessible at http://www.sgs.com.tw/Terms-and-Conditions and for electronic format documents, subject to Terms and Conditions for Electronic Documents at http://www.sgs.com.tw/Terms-and-Conditions. Attention is drawn to the limitation of liability, indemnification and jurisdiction issues defined therein. Any holder of this document is advised that information contained hereon reflects the Company's findings at the time of its intervention only and within the limits of Client's instructions, if any. The Company's sole responsibility is to its Client and this document does not exonerate parties to a transaction from exercising all their rights and obligations under the transaction documents. This document cannot be reproduced except in full, without prior written approval of the Company. Any unauthorized alteration, forgery or falsification of the content or appearance of this document is unlawful and offenders may be prosecuted to the fullest extent of the law.

Date: 2024/4/10

ID: 003
Report No. :TESA2402000084ES
LTE Band 12 (10MHz)_Body_Front Surface_CH 23095_QPSK_1-0_10mm
Communication System: LTE; Frequency: 707.5 MHz;Duty Cycle= 1:1
Medium parameters used: f = 707.5 MHz; σ = 0.902 S/m; ε_r = 43.152; ρ = 1000 kg/m^3
Phantom section: Flat Section
Ambient temperature: 22.3°C; Liquid temperature: 22.1°C

DASY5 Configuration:

- Probe: EX3DV4 - SN7642; ConvF(10.04, 9.87, 9.84) @ 707.5 MHz; Calibrated: 2024/2/21
- Sensor-Surface: 2mm (Mechanical Surface Detection)
- Electronics: DAE4 Sn1719; Calibrated: 2024/1/17
- Phantom: ELI
- DASY52 52.10.4(1527); SEMCAD X 14.6.14(7483)

Area Scan (61x81x1): Interpolated grid: dx=15 mm, dy=15 mm
Maximum value of SAR (interpolated) = 0.182 W/kg

Zoom Scan (5x5x7)/Cube 0: Measurement grid: dx=8mm, dy=8mm, dz=5mm
Reference Value = 12.19 V/m; Power Drift = 0.07 dB
Peak SAR (extrapolated) = 0.509 W/kg
SAR(1 g) = 0.291 W/kg; SAR(10 g) = 0.167 W/kg
Smallest distance from peaks to all points 3 dB below = 12.8 mm
Ratio of SAR at M2 to SAR at M1 = 57%
Maximum value of SAR (measured) = 0.407 W/kg

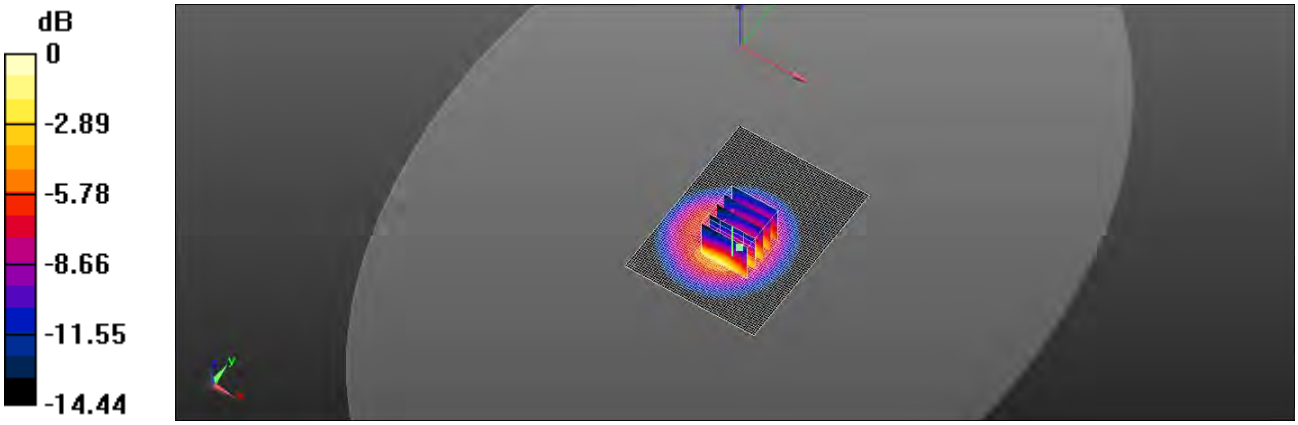

0 dB = 0.407 W/kg = -3.90 dBW/kg

Unless otherwise stated the results shown in this test report refer only to the sample(s) tested and such sample(s) are retained for 90 days only.
除非另有說明，此報告結果僅對測試之樣品負責，同時此樣品僅保留90天。本報告未經本公司書面許可，不可部份複製。
This document is issued by the Company subject to its General Conditions of Service printed overleaf, available on request or accessible at http://www.sgs.com.tw/Terms-and-Conditions and for electronic format documents, subject to Terms and Conditions for Electronic Documents at http://www.sgs.com.tw/Terms-and-Conditions. Attention is drawn to the limitation of liability, indemnification and jurisdiction issues defined therein. Any holder of this document is advised that information contained hereon reflects the Company's findings at the time of its intervention only and within the limits of Client's instructions, if any. The Company's sole responsibility is to its Client and this document does not exonerate parties to a transaction from exercising all their rights and obligations under the transaction documents. This document cannot be reproduced except in full, without prior written approval of the Company. Any unauthorized alteration, forgery or falsification of the content or appearance of this document is unlawful and offenders may be prosecuted to the fullest extent of the law.

Date: 2024/4/10

ID: 004
Report No. :TESA2402000084ES
LTE Band 66 (20MHz)_Body_Front Surface_CH 132322_QPSK_1-0_10mm
Communication System: LTE; Frequency: 1745 MHz;Duty Cycle= 1:1
Medium parameters used: f = 1745 MHz; σ = 1.391 S/m; ε_r = 41.054; ρ = 1000 kg/m^3
Phantom section: Flat Section
Ambient temperature: 22.3°C; Liquid temperature: 22.1°C

DASY5 Configuration:

- Probe: EX3DV4 - SN7642; ConvF(8.35, 8.21, 8.17) @ 1745 MHz; Calibrated: 2024/2/21
- Sensor-Surface: 2mm (Mechanical Surface Detection)
- Electronics: DAE4 Sn1719; Calibrated: 2024/1/17
- Phantom: ELI
- DASY52 52.10.4(1527); SEMCAD X 14.6.14(7483)

Area Scan (61x81x1): Interpolated grid: dx=15 mm, dy=15 mm
Maximum value of SAR (interpolated) = 1.07 W/kg

Zoom Scan (5x5x7)/Cube 0: Measurement grid: dx=8mm, dy=8mm, dz=5mm
Reference Value = 12.85 V/m; Power Drift = -0.08 dB
Peak SAR (extrapolated) = 2.77 W/kg
SAR(1 g) = 0.924 W/kg; SAR(10 g) = 0.437 W/kg
Smallest distance from peaks to all points 3 dB below = 9.7 mm
Ratio of SAR at M2 to SAR at M1 = 61.9%
Maximum value of SAR (measured) = 0.934 W/kg

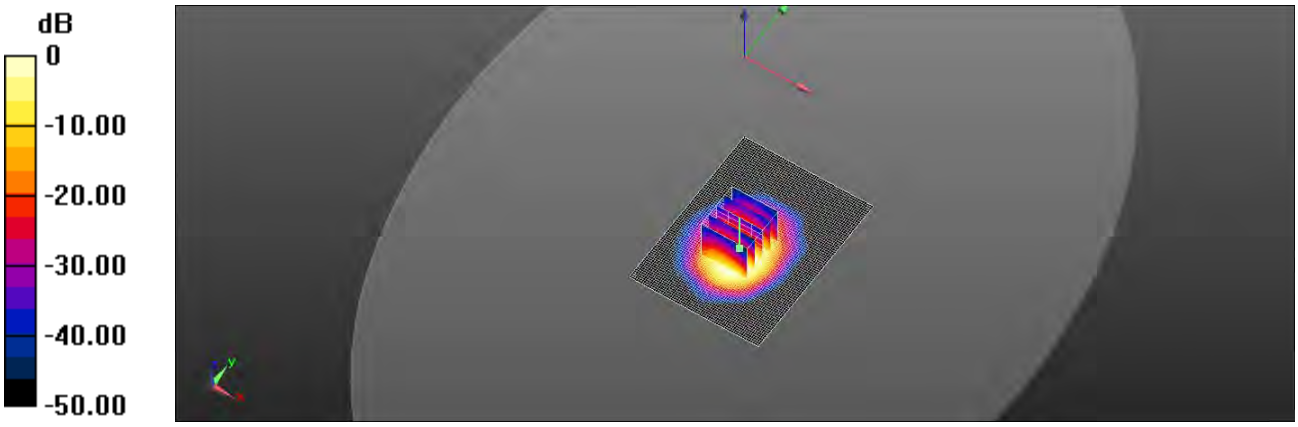

0 dB = 0.934 W/kg = -0.29 dBW/kg

Unless otherwise stated the results shown in this test report refer only to the sample(s) tested and such sample(s) are retained for 90 days only.
除非另有說明，此報告結果僅對測試之樣品負責，同時此樣品僅保留90天。本報告未經本公司書面許可，不可部份複製。
This document is issued by the Company subject to its General Conditions of Service printed overleaf, available on request or accessible at http://www.sgs.com.tw/Terms-and-Conditions and for electronic format documents, subject to Terms and Conditions for Electronic Documents at http://www.sgs.com.tw/Terms-and-Conditions. Attention is drawn to the limitation of liability, indemnification and jurisdiction issues defined therein. Any holder of this document is advised that information contained hereon reflects the Company's findings at the time of its intervention only and within the limits of Client's instructions, if any. The Company's sole responsibility is to its Client and this document does not exonerate parties to a transaction from exercising all their rights and obligations under the transaction documents. This document cannot be reproduced except in full, without prior written approval of the Company. Any unauthorized alteration, forgery or falsification of the content or appearance of this document is unlawful and offenders may be prosecuted to the fullest extent of the law.

Date: 2024/4/10

ID: 005
Report No. :TESA2402000084ES
LTE Band 71 (20MHz)_Body_Front Surface_CH 133297_QPSK_1-0_10mm
Communication System: LTE; Frequency: 680.5 MHz;Duty Cycle= 1:1
Medium parameters used: f = 680.5 MHz; σ = 0.873 S/m; ε_r = 43.297; ρ = 1000 kg/m^3
Phantom section: Flat Section
Ambient temperature: 22.3°C; Liquid temperature: 22.1°C

DASY5 Configuration:

- Probe: EX3DV4 - SN7642; ConvF(10.04, 9.87, 9.84) @ 680.5 MHz; Calibrated: 2024/2/21
- Sensor-Surface: 2mm (Mechanical Surface Detection)
- Electronics: DAE4 Sn1719; Calibrated: 2024/1/17
- Phantom: ELI
- DASY52 52.10.4(1527); SEMCAD X 14.6.14(7483)

Area Scan (61x81x1): Interpolated grid: dx=15 mm, dy=15 mm
Maximum value of SAR (interpolated) = 0.286 W/kg

Zoom Scan (5x5x7)/Cube 0: Measurement grid: dx=8mm, dy=8mm, dz=5mm
Reference Value = 12.85 V/m; Power Drift = 0.11 dB
Peak SAR (extrapolated) = 0.428 W/kg
SAR(1 g) = 0.231 W/kg; SAR(10 g) = 0.131 W/kg
Smallest distance from peaks to all points 3 dB below = 11.5 mm
Ratio of SAR at M2 to SAR at M1 = 54.8%
Maximum value of SAR (measured) = 0.325 W/kg

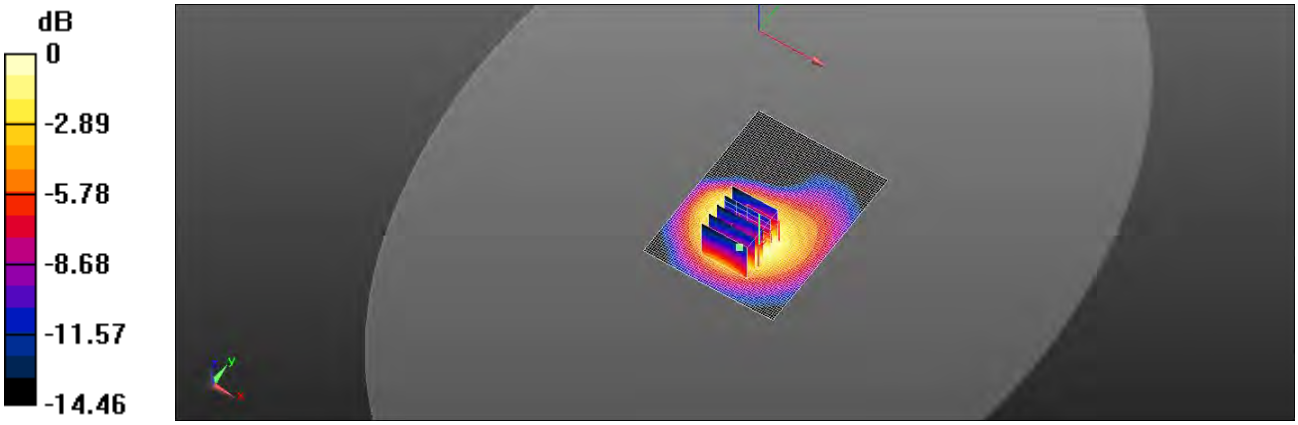

0 dB = 0.325 W/kg = -4.88 dBW/kg

Unless otherwise stated the results shown in this test report refer only to the sample(s) tested and such sample(s) are retained for 90 days only.
除非另有說明，此報告結果僅對測試之樣品負責，同時此樣品僅保留90天。本報告未經本公司書面許可，不可部份複製。
This document is issued by the Company subject to its General Conditions of Service printed overleaf, available on request or accessible at http://www.sgs.com.tw/Terms-and-Conditions and for electronic format documents, subject to Terms and Conditions for Electronic Documents at http://www.sgs.com.tw/Terms-and-Conditions. Attention is drawn to the limitation of liability, indemnification and jurisdiction issues defined therein. Any holder of this document is advised that information contained hereon reflects the Company's findings at the time of its intervention only and within the limits of Client's instructions, if any. The Company's sole responsibility is to its Client and this document does not exonerate parties to a transaction from exercising all their rights and obligations under the transaction documents. This document cannot be reproduced except in full, without prior written approval of the Company. Any unauthorized alteration, forgery or falsification of the content or appearance of this document is unlawful and offenders may be prosecuted to the fullest extent of the law.

Date: 2024/4/10

ID: 006
Report No. :TESA2402000084ES
LTE Band 2 (20MHz)_Extremity_Back Surface_CH 18700_QPSK_1-0_0mm
Communication System: LTE; Frequency: 1860 MHz;Duty Cycle= 1:1
Medium parameters used: f = 1860 MHz; σ = 1.432 S/m; ε_r = 40.984; ρ = 1000 kg/m^3
Phantom section: Flat Section
Ambient temperature: 22.3°C; Liquid temperature: 22.1℃

DASY5 Configuration:

- Probe: EX3DV4 - SN7642; ConvF(8.16, 8.04, 7.99) @ 1860 MHz; Calibrated: 2024/2/21
- Sensor-Surface: 2mm (Mechanical Surface Detection)
- Electronics: DAE4 Sn1719; Calibrated: 2024/1/17
- Phantom: ELI
- DASY52 52.10.4(1527); SEMCAD X 14.6.14(7483)

Area Scan (61x81x1): Interpolated grid: dx=15 mm, dy=15 mm
Maximum value of SAR (interpolated) = 1.57 W/kg

Zoom Scan (5x5x7)/Cube 0: Measurement grid: dx=8mm, dy=8mm, dz=5mm
Reference Value = 23.49 V/m; Power Drift = -0.16 dB
Peak SAR (extrapolated) = 1.64 W/kg
SAR(1 g) = 0.967 W/kg; SAR(10 g) = 0.536 W/kg
Smallest distance from peaks to all points 3 dB below = 10.1 mm
Ratio of SAR at M2 to SAR at M1 = 60.7%
Maximum value of SAR (measured) = 1.22 W/kg

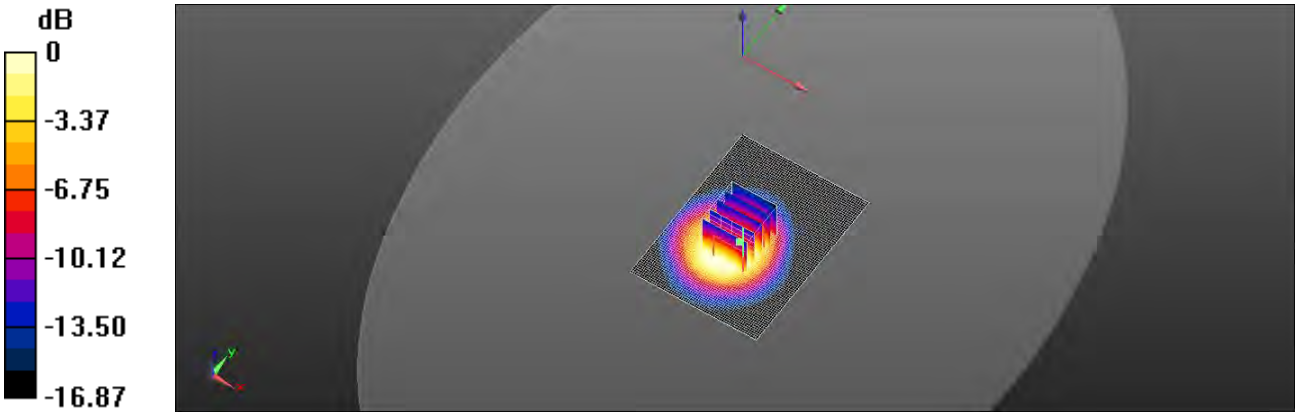

0 dB = 1.22 W/kg = 0.87 dBW/kg

Unless otherwise stated the results shown in this test report refer only to the sample(s) tested and such sample(s) are retained for 90 days only.
除非另有說明，此報告結果僅對測試之樣品負責，同時此樣品僅保留90天。本報告未經本公司書面許可，不可部份複製。
This document is issued by the Company subject to its General Conditions of Service printed overleaf, available on request or accessible at http://www.sgs.com.tw/Terms-and-Conditions and for electronic format documents, subject to Terms and Conditions for Electronic Documents at http://www.sgs.com.tw/Terms-and-Conditions. Attention is drawn to the limitation of liability, indemnification and jurisdiction issues defined therein. Any holder of this document is advised that information contained hereon reflects the Company's findings at the time of its intervention only and within the limits of Client's instructions, if any. The Company's sole responsibility is to its Client and this document does not exonerate parties to a transaction from exercising all their rights and obligations under the transaction documents. This document cannot be reproduced except in full, without prior written approval of the Company. Any unauthorized alteration, forgery or falsification of the content or appearance of this document is unlawful and offenders may be prosecuted to the fullest extent of the law.

Date: 2024/4/10

ID: 007
Report No. :TESA2402000084ES
LTE Band 4 (20MHz)_Extremity_Back Surface_CH 20175_QPSK_1-0_0mm
Communication System: LTE; Frequency: 1732.5 MHz;Duty Cycle= 1:1
Medium parameters used: f = 1732.5 MHz; σ = 1.372 S/m; ε_r = 41.071; ρ = 1000 kg/m^3
Phantom section: Flat Section
Ambient temperature: 22.3°C; Liquid temperature: 22.1℃

DASY5 Configuration:

- Probe: EX3DV4 - SN7642; ConvF(8.35, 8.21, 8.17) @ 1732.5 MHz; Calibrated: 2024/2/21
- Sensor-Surface: 2mm (Mechanical Surface Detection)
- Electronics: DAE4 Sn1719; Calibrated: 2024/1/17
- Phantom: ELI
- DASY52 52.10.4(1527); SEMCAD X 14.6.14(7483)

Area Scan (61x81x1): Interpolated grid: dx=15 mm, dy=15 mm
Maximum value of SAR (interpolated) = 4.05 W/kg

Zoom Scan (5x5x7)/Cube 0: Measurement grid: dx=8mm, dy=8mm, dz=5mm
Reference Value = 47.31 V/m; Power Drift = -0.18 dB
Peak SAR (extrapolated) = 4.26 W/kg
SAR(1 g) = 2.82 W/kg; SAR(10 g) = 1.59 W/kg
Smallest distance from peaks to all points 3 dB below = 12.9 mm
Ratio of SAR at M2 to SAR at M1 = 66%
Maximum value of SAR (measured) = 3.46 W/kg

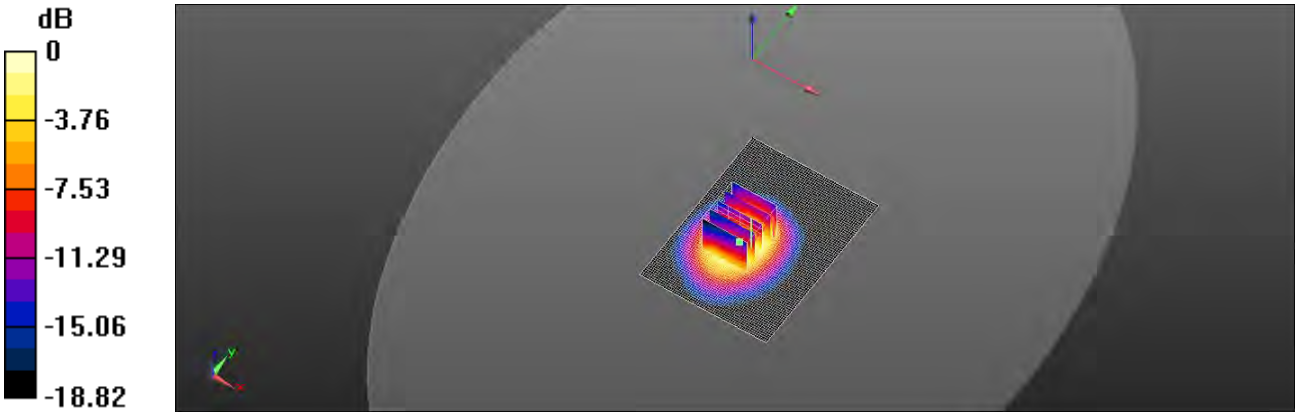

0 dB = 3.46 W/kg = 5.39 dBW/kg

Unless otherwise stated the results shown in this test report refer only to the sample(s) tested and such sample(s) are retained for 90 days only.
除非另有說明，此報告結果僅對測試之樣品負責，同時此樣品僅保留90天。本報告未經本公司書面許可，不可部份複製。
This document is issued by the Company subject to its General Conditions of Service printed overleaf, available on request or accessible at http://www.sgs.com.tw/Terms-and-Conditions and for electronic format documents, subject to Terms and Conditions for Electronic Documents at http://www.sgs.com.tw/Terms-and-Conditions. Attention is drawn to the limitation of liability, indemnification and jurisdiction issues defined therein. Any holder of this document is advised that information contained hereon reflects the Company's findings at the time of its intervention only and within the limits of Client's instructions, if any. The Company's sole responsibility is to its Client and this document does not exonerate parties to a transaction from exercising all their rights and obligations under the transaction documents. This document cannot be reproduced except in full, without prior written approval of the Company. Any unauthorized alteration, forgery or falsification of the content or appearance of this document is unlawful and offenders may be prosecuted to the fullest extent of the law.

Date: 2024/4/10

ID: 008
Report No. :TESA2402000084ES
LTE Band 12 (10MHz)_Extremity_Back Surface_CH 23095_QPSK_1-0_0mm
Communication System: LTE; Frequency: 707.5 MHz;Duty Cycle= 1:1
Medium parameters used: f = 707.5 MHz; σ = 0.902 S/m; ε_r = 43.152; ρ = 1000 kg/m^3
Phantom section: Flat Section
Ambient temperature: 22.3°C; Liquid temperature: 22.1℃

DASY5 Configuration:

- Probe: EX3DV4 - SN7642; ConvF(10.04, 9.87, 9.84) @ 707.5 MHz; Calibrated: 2024/2/21
- Sensor-Surface: 2mm (Mechanical Surface Detection)
- Electronics: DAE4 Sn1719; Calibrated: 2024/1/17
- Phantom: ELI
- DASY52 52.10.4(1527); SEMCAD X 14.6.14(7483)

Area Scan (61x81x1): Interpolated grid: dx=15 mm, dy=15 mm
Maximum value of SAR (interpolated) = 0.570 W/kg

Zoom Scan (5x5x7)/Cube 0: Measurement grid: dx=8mm, dy=8mm, dz=5mm
Reference Value = 21.08 V/m; Power Drift = 0.17 dB
Peak SAR (extrapolated) = 1.21 W/kg
SAR(1 g) = 0.603 W/kg; SAR(10 g) = 0.314 W/kg
Smallest distance from peaks to all points 3 dB below = 10.7 mm
Ratio of SAR at M2 to SAR at M1 = 51.9%
Maximum value of SAR (measured) = 0.857 W/kg

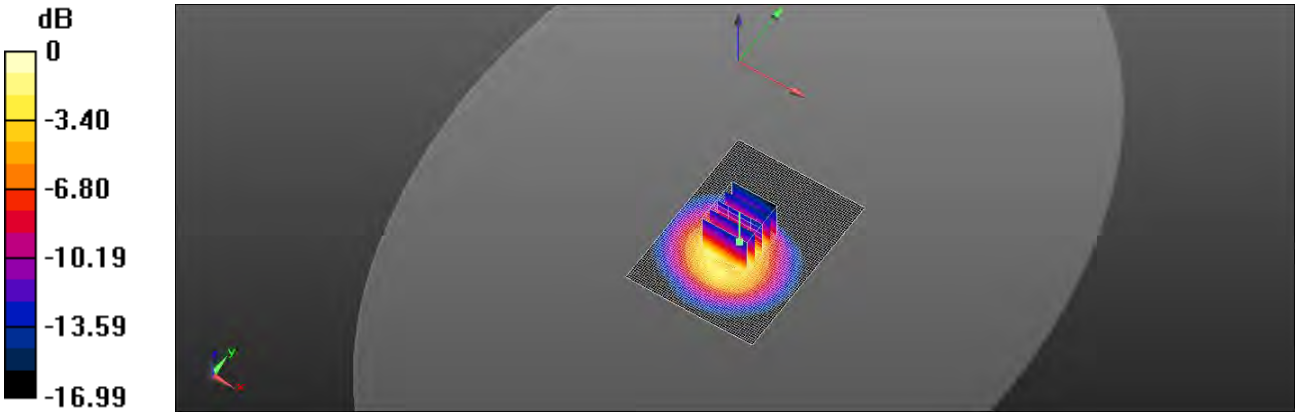

0 dB = 0.857 W/kg = -0.67 dBW/kg

Unless otherwise stated the results shown in this test report refer only to the sample(s) tested and such sample(s) are retained for 90 days only.
除非另有說明，此報告結果僅對測試之樣品負責，同時此樣品僅保留90天。本報告未經本公司書面許可，不可部份複製。
This document is issued by the Company subject to its General Conditions of Service printed overleaf, available on request or accessible at http://www.sgs.com.tw/Terms-and-Conditions and for electronic format documents, subject to Terms and Conditions for Electronic Documents at http://www.sgs.com.tw/Terms-and-Conditions. Attention is drawn to the limitation of liability, indemnification and jurisdiction issues defined therein. Any holder of this document is advised that information contained hereon reflects the Company's findings at the time of its intervention only and within the limits of Client's instructions, if any. The Company's sole responsibility is to its Client and this document does not exonerate parties to a transaction from exercising all their rights and obligations under the transaction documents. This document cannot be reproduced except in full, without prior written approval of the Company. Any unauthorized alteration, forgery or falsification of the content or appearance of this document is unlawful and offenders may be prosecuted to the fullest extent of the law.

Date: 2024/4/10

ID: 009
Report No. :TESA2402000084ES
LTE Band 66 (20MHz)_Extremity_Back Surface_CH 132322_QPSK_1-0_0mm
Communication System: LTE; Frequency: 1745 MHz;Duty Cycle= 1:1
Medium parameters used: f = 1745 MHz; σ = 1.391 S/m; ε_r = 41.054; ρ = 1000 kg/m^3
Phantom section: Flat Section
Ambient temperature: 22.3°C; Liquid temperature: 22.1℃

DASY5 Configuration:

- Probe: EX3DV4 - SN7642; ConvF(8.35, 8.21, 8.17) @ 1745 MHz; Calibrated: 2024/2/21
- Sensor-Surface: 2mm (Mechanical Surface Detection)
- Electronics: DAE4 Sn1719; Calibrated: 2024/1/17
- Phantom: ELI
- DASY52 52.10.4(1527); SEMCAD X 14.6.14(7483)

Area Scan (61x81x1): Interpolated grid: dx=15 mm, dy=15 mm
Maximum value of SAR (interpolated) = 4.83 W/kg

Zoom Scan (5x5x7)/Cube 0: Measurement grid: dx=8mm, dy=8mm, dz=5mm
Reference Value = 25.18 V/m; Power Drift = 0.06 dB
Peak SAR (extrapolated) = 4.49 W/kg
SAR(1 g) = 2.26 W/kg; SAR(10 g) = 1.09 W/kg
Smallest distance from peaks to all points 3 dB below = 9.2 mm
Ratio of SAR at M2 to SAR at M1 = 69.7%
Maximum value of SAR (measured) = 2.45 W/kg

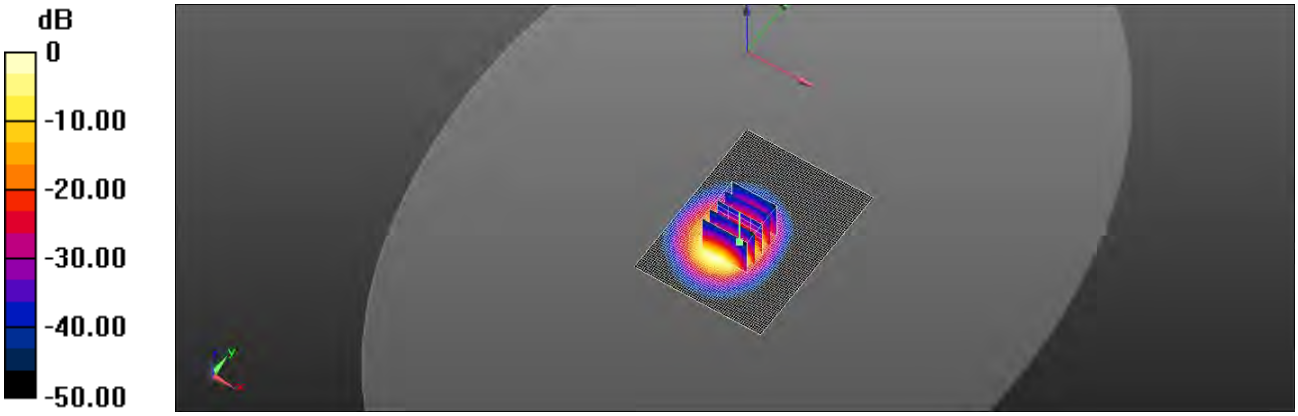

0 dB = 2.45 W/kg = 3.88 dBW/kg

Unless otherwise stated the results shown in this test report refer only to the sample(s) tested and such sample(s) are retained for 90 days only.
除非另有說明，此報告結果僅對測試之樣品負責，同時此樣品僅保留90天。本報告未經本公司書面許可，不可部份複製。
This document is issued by the Company subject to its General Conditions of Service printed overleaf, available on request or accessible at http://www.sgs.com.tw/Terms-and-Conditions and for electronic format documents, subject to Terms and Conditions for Electronic Documents at http://www.sgs.com.tw/Terms-and-Conditions. Attention is drawn to the limitation of liability, indemnification and jurisdiction issues defined therein. Any holder of this document is advised that information contained hereon reflects the Company's findings at the time of its intervention only and within the limits of Client's instructions, if any. The Company's sole responsibility is to its Client and this document does not exonerate parties to a transaction from exercising all their rights and obligations under the transaction documents. This document cannot be reproduced except in full, without prior written approval of the Company. Any unauthorized alteration, forgery or falsification of the content or appearance of this document is unlawful and offenders may be prosecuted to the fullest extent of the law.

Date: 2024/4/10

ID: 010
Report No. :TESA2402000084ES
LTE Band 71 (20MHz)_Extremity_Back Surface_CH 133297_QPSK_1-0_0mm
Communication System: LTE; Frequency: 680.5 MHz;Duty Cycle= 1:1
Medium parameters used: f = 680.5 MHz; σ = 0.873 S/m; ε_r = 43.297; ρ = 1000 kg/m^3
Phantom section: Flat Section
Ambient temperature: 22.3°C; Liquid temperature: 22.1℃

DASY5 Configuration:

- Probe: EX3DV4 - SN7642; ConvF(10.04, 9.87, 9.84) @ 680.5 MHz; Calibrated: 2024/2/21
- Sensor-Surface: 2mm (Mechanical Surface Detection)
- Electronics: DAE4 Sn1719; Calibrated: 2024/1/17
- Phantom: ELI
- DASY52 52.10.4(1527); SEMCAD X 14.6.14(7483)

Area Scan (61x81x1): Interpolated grid: dx=15 mm, dy=15 mm
Maximum value of SAR (interpolated) = 1.17 W/kg

Zoom Scan (5x5x7)/Cube 0: Measurement grid: dx=8mm, dy=8mm, dz=5mm
Reference Value = 22.01 V/m; Power Drift = 0.17 dB
Peak SAR (extrapolated) = 1.24 W/kg
SAR(1 g) = 0.445 W/kg; SAR(10 g) = 0.156 W/kg
Smallest distance from peaks to all points 3 dB below = 9.2 mm
Ratio of SAR at M2 to SAR at M1 = 45.3%
Maximum value of SAR (measured) = 0.548 W/kg

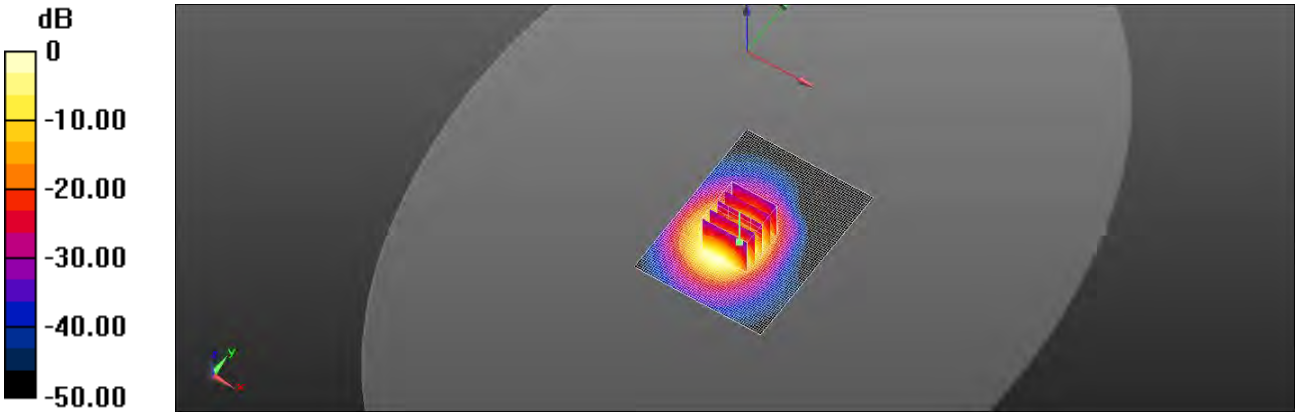

0 dB = 0.548 W/kg = -2.61 dBW/kg

Unless otherwise stated the results shown in this test report refer only to the sample(s) tested and such sample(s) are retained for 90 days only.
除非另有說明，此報告結果僅對測試之樣品負責，同時此樣品僅保留90天。本報告未經本公司書面許可，不可部份複製。
This document is issued by the Company subject to its General Conditions of Service printed overleaf, available on request or accessible at http://www.sgs.com.tw/Terms-and-Conditions and for electronic format documents, subject to Terms and Conditions for Electronic Documents at http://www.sgs.com.tw/Terms-and-Conditions. Attention is drawn to the limitation of liability, indemnification and jurisdiction issues defined therein. Any holder of this document is advised that information contained hereon reflects the Company's findings at the time of its intervention only and within the limits of Client's instructions, if any. The Company's sole responsibility is to its Client and this document does not exonerate parties to a transaction from exercising all their rights and obligations under the transaction documents. This document cannot be reproduced except in full, without prior written approval of the Company. Any unauthorized alteration, forgery or falsification of the content or appearance of this document is unlawful and offenders may be prosecuted to the fullest extent of the law.

Date: 2024/3/21

ID: 011
Report No. :TESA2402000084ES
WLAN 802.11b_Body_Front Surface_CH 11_10mm_Ant1
Communication System: WLAN; Frequency: 2462 MHz;Duty Cycle= 1:1.013
Medium parameters used: f = 2462 MHz; σ = 1.865 S/m; ε_r = 40.157; ρ = 1000 kg/m^3
Phantom section: Flat Section
Ambient temperature: 22.4°C; Liquid temperature: 22.2℃

DASY5 Configuration:

- Probe: EX3DV4 - SN7642; ConvF(7.74, 7.66, 7.62) @ 2462 MHz; Calibrated: 2024/2/21
- Sensor-Surface: 2mm (Mechanical Surface Detection)
- Electronics: DAE4 Sn1719; Calibrated: 2024/1/17
- Phantom: ELI
- DASY52 52.10.4(1527); SEMCAD X 14.6.14(7483)

Area Scan (81x101x1): Interpolated grid: dx=12 mm, dy=12 mm
Maximum value of SAR (interpolated) = 0.674 W/kg

Zoom Scan (7x7x7)/Cube 0: Measurement grid: dx=5mm, dy=5mm, dz=5mm
Reference Value = 22.31 V/m; Power Drift = -0.04 dB
Peak SAR (extrapolated) = 0.787 W/kg
SAR(1 g) = 0.492 W/kg; SAR(10 g) = 0.292 W/kg
Smallest distance from peaks to all points 3 dB below = 15.7 mm
Ratio of SAR at M2 to SAR at M1 = 57.9%
Maximum value of SAR (measured) = 0.631 W/kg

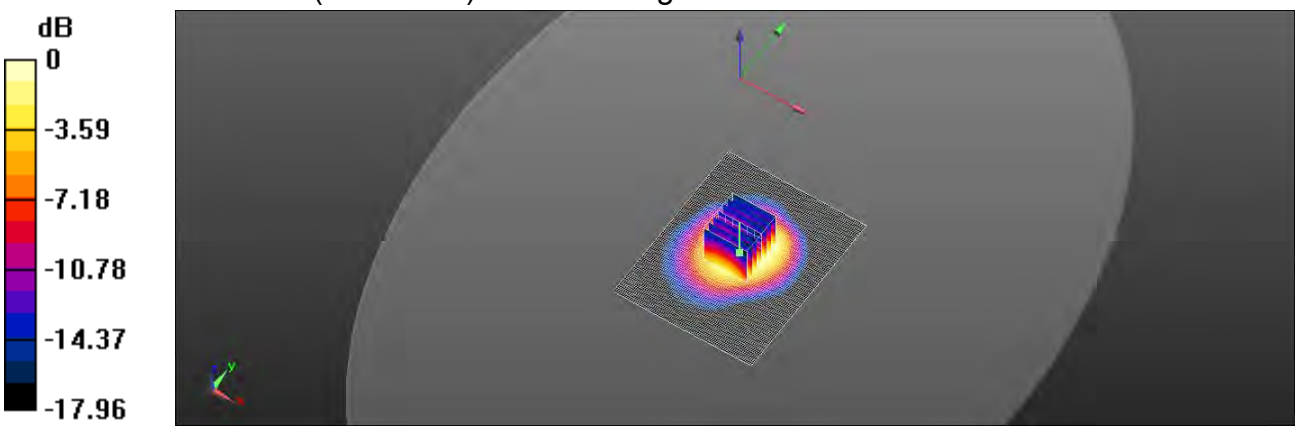

0 dB = 0.631 W/kg = -2.00 dBW/kg

Unless otherwise stated the results shown in this test report refer only to the sample(s) tested and such sample(s) are retained for 90 days only.
除非另有說明，此報告結果僅對測試之樣品負責，同時此樣品僅保留90天。本報告未經本公司書面許可，不可部份複製。
This document is issued by the Company subject to its General Conditions of Service printed overleaf, available on request or accessible at http://www.sgs.com.tw/Terms-and-Conditions and for electronic format documents, subject to Terms and Conditions for Electronic Documents at http://www.sgs.com.tw/Terms-and-Conditions. Attention is drawn to the limitation of liability, indemnification and jurisdiction issues defined therein. Any holder of this document is advised that information contained hereon reflects the Company's findings at the time of its intervention only and within the limits of Client's instructions, if any. The Company's sole responsibility is to its Client and this document does not exonerate parties to a transaction from exercising all their rights and obligations under the transaction documents. This document cannot be reproduced except in full, without prior written approval of the Company. Any unauthorized alteration, forgery or falsification of the content or appearance of this document is unlawful and offenders may be prosecuted to the fullest extent of the law.

Date: 2024/3/21

ID: 012
Report No. :TESA2402000084ES
Bluetooth(GFSK)_Body_Front Surface_CH 0_10mm_Ant1
Communication System: Bluetooth; Frequency: 2402 MHz; Duty Cycle= 1:1.31
Medium parameters used: f = 2402 MHz; σ = 1.808 S/m; ε_r = 40.276; ρ = 1000 kg/m^3
Phantom section: Flat Section
Ambient temperature: 22.4°C; Liquid temperature: 22.2℃

DASY5 Configuration:

- Probe: EX3DV4 - SN7642; ConvF(7.74, 7.66, 7.62) @ 2402 MHz; Calibrated: 2024/2/21
- Sensor-Surface: 2mm (Mechanical Surface Detection)
- Electronics: DAE4 Sn1719; Calibrated: 2024/1/17
- Phantom: ELI
- DASY52 52.10.4(1527); SEMCAD X 14.6.14(7483)

Area Scan (81x101x1): Interpolated grid: dx=12 mm, dy=12 mm
Maximum value of SAR (interpolated) = 0.0352 W/kg

Zoom Scan (7x7x7)/Cube 0: Measurement grid: dx=5mm, dy=5mm, dz=5mm
Reference Value = 3.008 V/m; Power Drift = 0.12 dB
Peak SAR (extrapolated) = 0.0280 W/kg
SAR(1 g) = 0.013 W/kg; SAR(10 g) = 0.006 W/kg
Smallest distance from peaks to all points 3 dB below: Larger than measurement grid
Ratio of SAR at M2 to SAR at M1 = 50.1%
Maximum value of SAR (measured) = 0.0206 W/kg

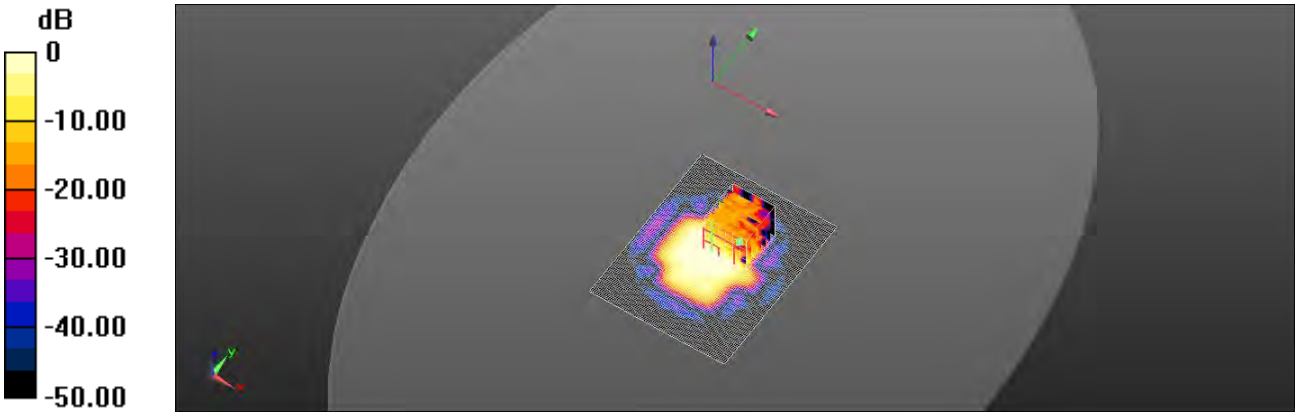

0 dB = 0.0206 W/kg = -16.85 dBW/kg

Unless otherwise stated the results shown in this test report refer only to the sample(s) tested and such sample(s) are retained for 90 days only.
除非另有說明，此報告結果僅對測試之樣品負責，同時此樣品僅保留90天。本報告未經本公司書面許可，不可部份複製。
This document is issued by the Company subject to its General Conditions of Service printed overleaf, available on request or accessible at http://www.sgs.com.tw/Terms-and-Conditions and for electronic format documents, subject to Terms and Conditions for Electronic Documents at http://www.sgs.com.tw/Terms-and-Conditions. Attention is drawn to the limitation of liability, indemnification and jurisdiction issues defined therein. Any holder of this document is advised that information contained hereon reflects the Company's findings at the time of its intervention only and within the limits of Client's instructions, if any. The Company's sole responsibility is to its Client and this document does not exonerate parties to a transaction from exercising all their rights and obligations under the transaction documents. This document cannot be reproduced except in full, without prior written approval of the Company. Any unauthorized alteration, forgery or falsification of the content or appearance of this document is unlawful and offenders may be prosecuted to the fullest extent of the law.

Date: 2024/3/21

ID: 013
Report No. :TESA2402000084ES
WLAN 802.11b_Extremity_Back Surface_CH 11_0mm_Ant1
Communication System: WLAN; Frequency: 2462 MHz; Duty Cycle= 1:1.013
Medium parameters used: f = 2462 MHz; σ = 1.865 S/m; ε_r = 40.157; ρ = 1000 kg/m^3
Phantom section: Flat Section
Ambient temperature: 22.4°C; Liquid temperature: 22.2℃

DASY5 Configuration:

- Probe: EX3DV4 - SN7642; ConvF(7.74, 7.66, 7.62) @ 2462 MHz; Calibrated: 2024/2/21
- Sensor-Surface: 2mm (Mechanical Surface Detection)
- Electronics: DAE4 Sn1719; Calibrated: 2024/1/17
- Phantom: ELI
- DASY52 52.10.4(1527); SEMCAD X 14.6.14(7483)

Area Scan (81x101x1): Interpolated grid: dx=12 mm, dy=12 mm
Maximum value of SAR (interpolated) = 1.30 W/kg

Zoom Scan (7x7x7)/Cube 0: Measurement grid: dx=5mm, dy=5mm, dz=5mm
Reference Value = 18.64 V/m; Power Drift = 0.16 dB
Peak SAR (extrapolated) = 1.41 W/kg
SAR(1 g) = 0.759 W/kg; SAR(10 g) = 0.419 W/kg
Smallest distance from peaks to all points 3 dB below = 11.4 mm
Ratio of SAR at M2 to SAR at M1 = 43.9%
Maximum value of SAR (measured) = 0.998 W/kg

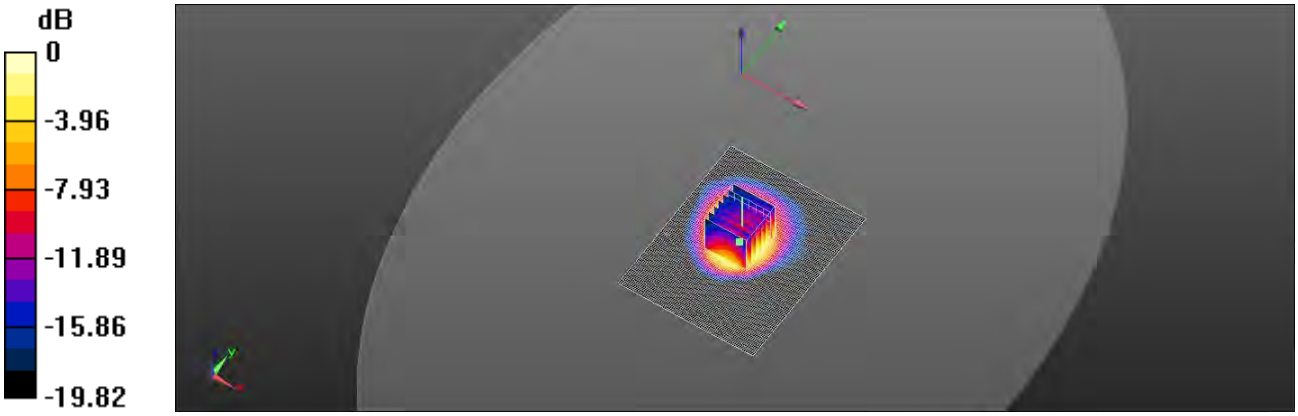

0 dB = 0.998 W/kg = -0.01 dBW/kg

Unless otherwise stated the results shown in this test report refer only to the sample(s) tested and such sample(s) are retained for 90 days only.
除非另有說明，此報告結果僅對測試之樣品負責，同時此樣品僅保留90天。本報告未經本公司書面許可，不可部份複製。
This document is issued by the Company subject to its General Conditions of Service printed overleaf, available on request or accessible at http://www.sgs.com.tw/Terms-and-Conditions and for electronic format documents, subject to Terms and Conditions for Electronic Documents at http://www.sgs.com.tw/Terms-and-Conditions. Attention is drawn to the limitation of liability, indemnification and jurisdiction issues defined therein. Any holder of this document is advised that information contained hereon reflects the Company's findings at the time of its intervention only and within the limits of Client's instructions, if any. The Company's sole responsibility is to its Client and this document does not exonerate parties to a transaction from exercising all their rights and obligations under the transaction documents. This document cannot be reproduced except in full, without prior written approval of the Company. Any unauthorized alteration, forgery or falsification of the content or appearance of this document is unlawful and offenders may be prosecuted to the fullest extent of the law.

Date: 2024/3/21

ID: 014
Report No. :TESA2402000084ES
Bluetooth(GFSK)_Extremity_Back Surface_CH 0_0mm_Ant1
Communication System: Bluetooth; Frequency: 2402 MHz;Duty Cycle= 1:1.31
Medium parameters used: f = 2402 MHz; σ = 1.808 S/m; ε_r = 40.276; ρ = 1000 kg/m^3
Phantom section: Flat Section
Ambient temperature: 22.4°C; Liquid temperature: 22.2℃

DASY5 Configuration:

- Probe: EX3DV4 - SN7642; ConvF(7.74, 7.66, 7.62) @ 2402 MHz; Calibrated: 2024/2/21
- Sensor-Surface: 2mm (Mechanical Surface Detection)
- Electronics: DAE4 Sn1719; Calibrated: 2024/1/17
- Phantom: ELI
- DASY52 52.10.4(1527); SEMCAD X 14.6.14(7483)

Area Scan (81x101x1): Interpolated grid: dx=12 mm, dy=12 mm
Maximum value of SAR (interpolated) = 0.178 W/kg

Zoom Scan (7x7x7)/Cube 0: Measurement grid: dx=5mm, dy=5mm, dz=5mm
Reference Value = 14.33 V/m; Power Drift = 0.11 dB
Peak SAR (extrapolated) = 0.167 W/kg
SAR(1 g) = 0.112 W/kg; SAR(10 g) = 0.076 W/kg
Smallest distance from peaks to all points 3 dB below = 9.9 mm
Ratio of SAR at M2 to SAR at M1 = 60.6%
Maximum value of SAR (measured) = 0.123 W/kg

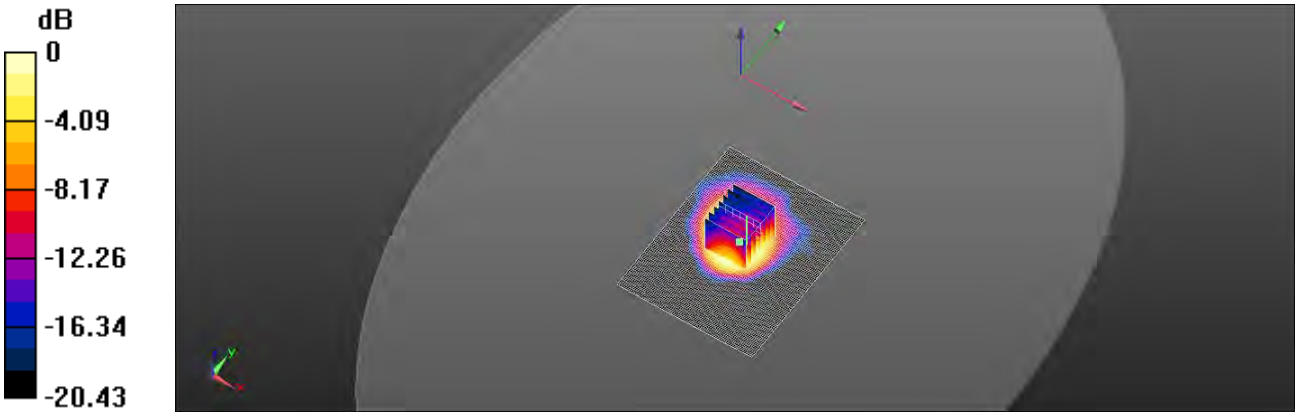

0 dB = 0.123 W/kg = -9.09 dBW/kg

Unless otherwise stated the results shown in this test report refer only to the sample(s) tested and such sample(s) are retained for 90 days only.
除非另有說明，此報告結果僅對測試之樣品負責，同時此樣品僅保留90天。本報告未經本公司書面許可，不可部份複製。
This document is issued by the Company subject to its General Conditions of Service printed overleaf, available on request or accessible at http://www.sgs.com.tw/Terms-and-Conditions and for electronic format documents, subject to Terms and Conditions for Electronic Documents at http://www.sgs.com.tw/Terms-and-Conditions. Attention is drawn to the limitation of liability, indemnification and jurisdiction issues defined therein. Any holder of this document is advised that information contained hereon reflects the Company's findings at the time of its intervention only and within the limits of Client's instructions, if any. The Company's sole responsibility is to its Client and this document does not exonerate parties to a transaction from exercising all their rights and obligations under the transaction documents. This document cannot be reproduced except in full, without prior written approval of the Company. Any unauthorized alteration, forgery or falsification of the content or appearance of this document is unlawful and offenders may be prosecuted to the fullest extent of the law.

12 SAR SYSTEM CHECK RESULTS

Date: 2024/4/10

Report No. :TESA2402000084ES
Dipole 750 MHz_SN:1015
Communication System: CW; Frequency: 750 MHz;Duty Cycle= 1:1
Medium parameters used: f = 750 MHz; σ = 0.905 S/m; ε_r = 42.899; ρ = 1000 kg/m^3
Phantom section: Flat Section
Ambient temperature: 22.3°C; Liquid temperature: 22.1℃

DASY5 Configuration:

- Probe: EX3DV4 - SN7642; ConvF(10.04, 9.87, 9.84) @ 750 MHz; Calibrated: 2024/2/21
- Sensor-Surface: 2mm (Mechanical Surface Detection)
- Electronics: DAE4 Sn1719; Calibrated: 2024/1/17
- Phantom: ELI
- DASY52 52.10.4(1527); SEMCAD X 14.6.14(7483)

Area Scan (41x141x1): Interpolated grid: dx=15 mm, dy=15 mm
Maximum value of SAR (interpolated) = 2.87 W/kg

Zoom Scan (7x7x7)/Cube 0: Measurement grid: dx=5mm, dy=5mm, dz=5mm
Reference Value = 51.76 V/m; Power Drift = 0.05 dB
Peak SAR (extrapolated) = 3.37 W/kg
SAR(1 g) = 2.18 W/kg; SAR(10 g) = 1.36 W/kg
Smallest distance from peaks to all points 3 dB below = 15.8 mm
Ratio of SAR at M2 to SAR at M1 = 67.6%
Maximum value of SAR (measured) = 2.89 W/kg

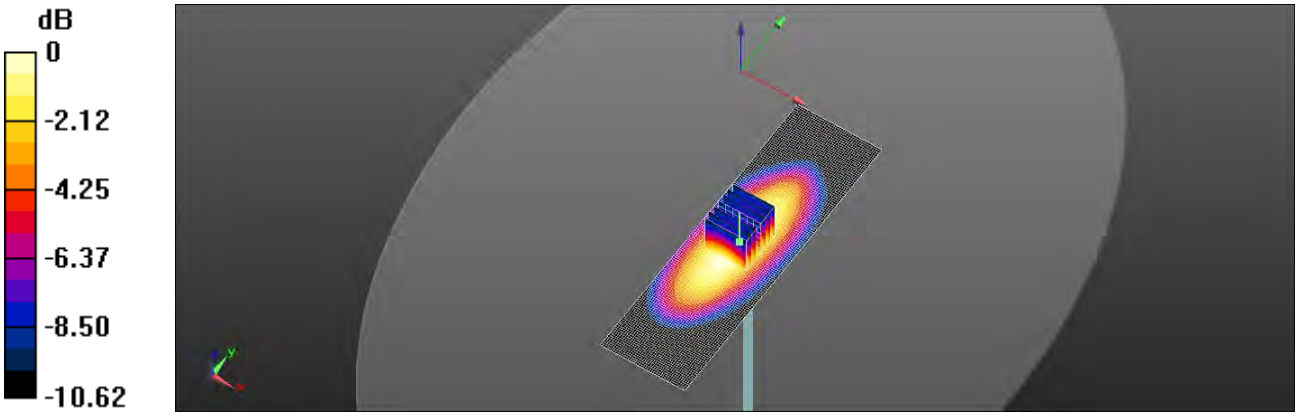

0 dB = 2.89 W/kg = 4.61 dBW/kg

Unless otherwise stated the results shown in this test report refer only to the sample(s) tested and such sample(s) are retained for 90 days only.
除非另有說明，此報告結果僅對測試之樣品負責，同時此樣品僅保留90天。本報告未經本公司書面許可，不可部份複製。
This document is issued by the Company subject to its General Conditions of Service printed overleaf, available on request or accessible at http://www.sgs.com.tw/Terms-and-Conditions and for electronic format documents, subject to Terms and Conditions for Electronic Documents at http://www.sgs.com.tw/Terms-and-Conditions. Attention is drawn to the limitation of liability, indemnification and jurisdiction issues defined therein. Any holder of this document is advised that information contained hereon reflects the Company's findings at the time of its intervention only and within the limits of Client's instructions, if any. The Company's sole responsibility is to its Client and this document does not exonerate parties to a transaction from exercising all their rights and obligations under the transaction documents. This document cannot be reproduced except in full, without prior written approval of the Company. Any unauthorized alteration, forgery or falsification of the content or appearance of this document is unlawful and offenders may be prosecuted to the fullest extent of the law.

Date: 2024/4/16

Report No. :TESA2402000084ES
Dipole 750 MHz_SN:1015
Communication System: CW; Frequency: 750 MHz;Duty Cycle= 1:1
Medium parameters used: f = 750 MHz; σ = 0.895 S/m; ε_r = 42.815; ρ = 1000 kg/m^3
Phantom section: Flat Section
Ambient temperature: 22.5°C; Liquid temperature: 22.3℃

DASY5 Configuration:

- Probe: EX3DV4 - SN7642; ConvF(10.04, 9.87, 9.84) @ 750 MHz; Calibrated: 2024/2/21
- Sensor-Surface: 2mm (Mechanical Surface Detection)
- Electronics: DAE4 Sn1719; Calibrated: 2024/1/17
- Phantom: ELI
- DASY52 52.10.4(1527); SEMCAD X 14.6.14(7483)

Area Scan (41x141x1): Interpolated grid: dx=15 mm, dy=15 mm
Maximum value of SAR (interpolated) = 2.79 W/kg

Zoom Scan (7x7x7)/Cube 0: Measurement grid: dx=5mm, dy=5mm, dz=5mm
Reference Value = 50.37 V/m; Power Drift = 0.03 dB
Peak SAR (extrapolated) = 3.28 W/kg
SAR(1 g) = 2.12 W/kg; SAR(10 g) = 1.33 W/kg
Smallest distance from peaks to all points 3 dB below = 15.8 mm
Ratio of SAR at M2 to SAR at M1 = 67.6%
Maximum value of SAR (measured) = 2.81 W/kg

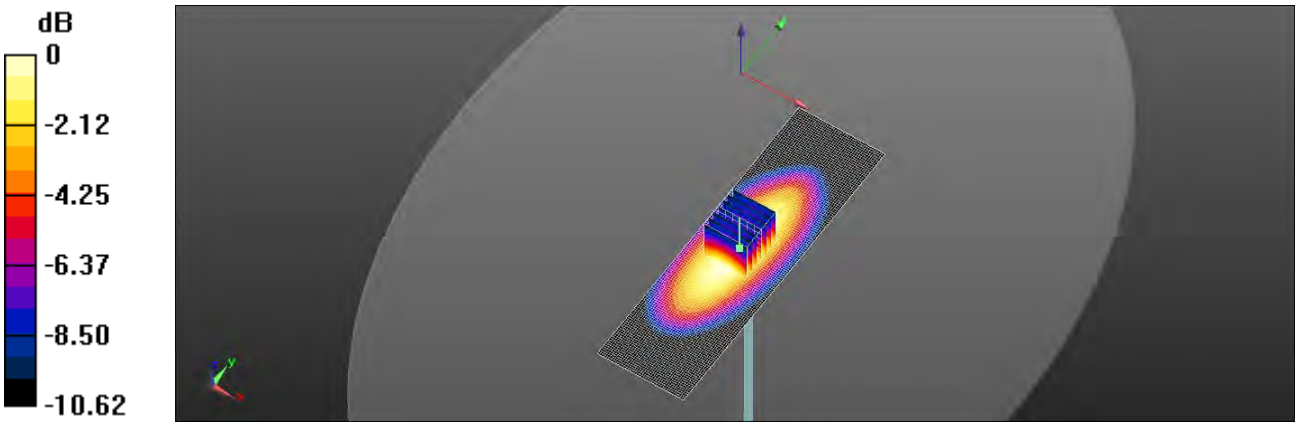

0 dB = 2.81 W/kg = 4.48 dBW/kg

Unless otherwise stated the results shown in this test report refer only to the sample(s) tested and such sample(s) are retained for 90 days only.
除非另有說明，此報告結果僅對測試之樣品負責，同時此樣品僅保留90天。本報告未經本公司書面許可，不可部份複製。
This document is issued by the Company subject to its General Conditions of Service printed overleaf, available on request or accessible at http://www.sgs.com.tw/Terms-and-Conditions and for electronic format documents, subject to Terms and Conditions for Electronic Documents at http://www.sgs.com.tw/Terms-and-Conditions. Attention is drawn to the limitation of liability, indemnification and jurisdiction issues defined therein. Any holder of this document is advised that information contained hereon reflects the Company's findings at the time of its intervention only and within the limits of Client's instructions, if any. The Company's sole responsibility is to its Client and this document does not exonerate parties to a transaction from exercising all their rights and obligations under the transaction documents. This document cannot be reproduced except in full, without prior written approval of the Company. Any unauthorized alteration, forgery or falsification of the content or appearance of this document is unlawful and offenders may be prosecuted to the fullest extent of the law.

Date: 2024/4/10

Report No. :TESA2402000084ES
Dipole 1750 MHz_SN:1008
Communication System: CW; Frequency: 1750 MHz;Duty Cycle= 1:1
Medium parameters used: f = 1750 MHz; σ = 1.395 S/m; ε_r = 41.029; ρ = 1000 kg/m^3
Phantom section: Flat Section
Ambient temperature: 22.3°C; Liquid temperature: 22.1℃

DASY5 Configuration:

- Probe: EX3DV4 - SN7642; ConvF(8.35, 8.21, 8.17) @ 1750 MHz; Calibrated: 2024/2/21
- Sensor-Surface: 2mm (Mechanical Surface Detection)
- Electronics: DAE4 Sn1719; Calibrated: 2024/1/17
- Phantom: ELI
- DASY52 52.10.4(1527); SEMCAD X 14.6.14(7483)

Area Scan (51x81x1): Interpolated grid: dx=15 mm, dy=15 mm
Maximum value of SAR (interpolated) = 12.5 W/kg

Zoom Scan (7x7x7)/Cube 0: Measurement grid: dx=5mm, dy=5mm, dz=5mm
Reference Value = 90.41 V/m; Power Drift = -0.09 dB
Peak SAR (extrapolated) = 13.6 W/kg
SAR(1 g) = 8.59 W/kg; SAR(10 g) = 4.65 W/kg
Smallest distance from peaks to all points 3 dB below = 10 mm
Ratio of SAR at M2 to SAR at M1 = 62.9%
Maximum value of SAR (measured) = 11.7 W/kg

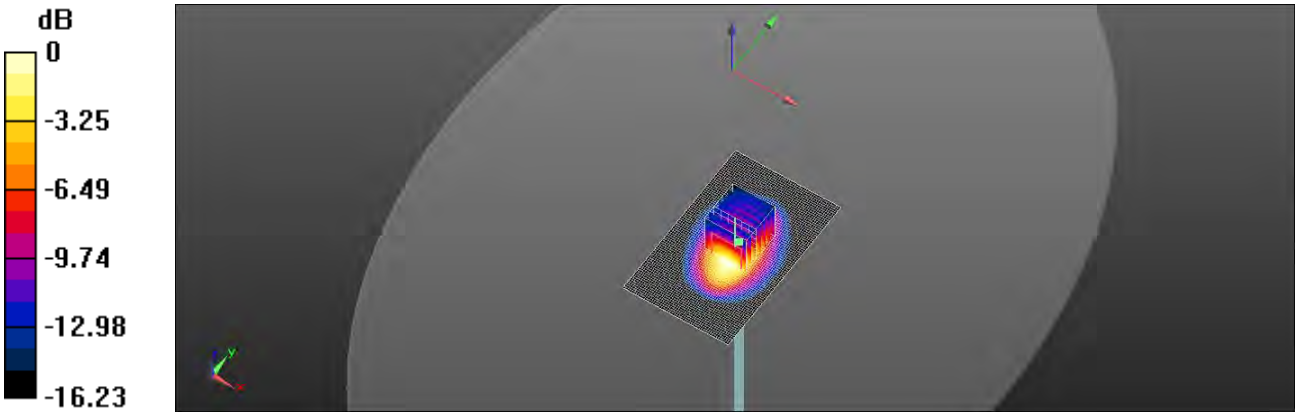

0 dB = 11.7 W/kg = 10.68 dBW/kg

Unless otherwise stated the results shown in this test report refer only to the sample(s) tested and such sample(s) are retained for 90 days only.
除非另有說明，此報告結果僅對測試之樣品負責，同時此樣品僅保留90天。本報告未經本公司書面許可，不可部份複製。
This document is issued by the Company subject to its General Conditions of Service printed overleaf, available on request or accessible at http://www.sgs.com.tw/Terms-and-Conditions and for electronic format documents, subject to Terms and Conditions for Electronic Documents at http://www.sgs.com.tw/Terms-and-Conditions. Attention is drawn to the limitation of liability, indemnification and jurisdiction issues defined therein. Any holder of this document is advised that information contained hereon reflects the Company's findings at the time of its intervention only and within the limits of Client's instructions, if any. The Company's sole responsibility is to its Client and this document does not exonerate parties to a transaction from exercising all their rights and obligations under the transaction documents. This document cannot be reproduced except in full, without prior written approval of the Company. Any unauthorized alteration, forgery or falsification of the content or appearance of this document is unlawful and offenders may be prosecuted to the fullest extent of the law.

Date: 2024/4/16

Report No. :TESA2402000084ES
Dipole 1750 MHz_SN:1008
Communication System: CW; Frequency: 1750 MHz;Duty Cycle: 1:1
Medium parameters used: f = 1750 MHz; σ = 1.415 S/m; ε_r = 40.836; ρ = 1000 kg/m^3
Phantom section: Flat Section
Ambient temperature: 22.5°C; Liquid temperature: 22.3℃

DASY5 Configuration:

- Probe: EX3DV4 - SN7642; ConvF(8.35, 8.21, 8.17) @ 1750 MHz; Calibrated: 2024/2/21
- Sensor-Surface: 2mm (Mechanical Surface Detection)
- Electronics: DAE4 Sn1719; Calibrated: 2024/1/17
- Phantom: ELI
- DASY52 52.10.4(1527); SEMCAD X 14.6.14(7483)

Area Scan (51x81x1): Interpolated grid: dx=15 mm, dy=15 mm
Maximum value of SAR (interpolated) = 12.6 W/kg

Zoom Scan (7x7x7)/Cube 0: Measurement grid: dx=5mm, dy=5mm, dz=5mm
Reference Value = 90.52 V/m; Power Drift = -0.06 dB
Peak SAR (extrapolated) = 13.6 W/kg
SAR(1 g) = 8.6 W/kg; SAR(10 g) = 4.66 W/kg
Smallest distance from peaks to all points 3 dB below = 10.2 mm
Ratio of SAR at M2 to SAR at M1 = 63.4%
Maximum value of SAR (measured) = 11.6 W/kg

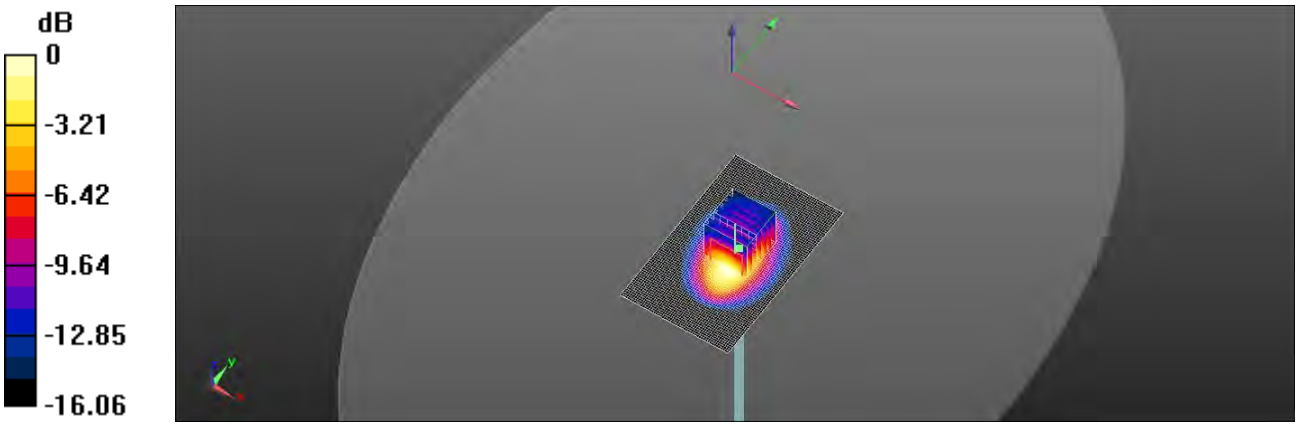

0 dB = 11.6 W/kg = 10.65 dBW/kg

Unless otherwise stated the results shown in this test report refer only to the sample(s) tested and such sample(s) are retained for 90 days only.
除非另有說明，此報告結果僅對測試之樣品負責，同時此樣品僅保留90天。本報告未經本公司書面許可，不可部份複製。
This document is issued by the Company subject to its General Conditions of Service printed overleaf, available on request or accessible at http://www.sgs.com.tw/Terms-and-Conditions and for electronic format documents, subject to Terms and Conditions for Electronic Documents at http://www.sgs.com.tw/Terms-and-Conditions. Attention is drawn to the limitation of liability, indemnification and jurisdiction issues defined therein. Any holder of this document is advised that information contained hereon reflects the Company's findings at the time of its intervention only and within the limits of Client's instructions, if any. The Company's sole responsibility is to its Client and this document does not exonerate parties to a transaction from exercising all their rights and obligations under the transaction documents. This document cannot be reproduced except in full, without prior written approval of the Company. Any unauthorized alteration, forgery or falsification of the content or appearance of this document is unlawful and offenders may be prosecuted to the fullest extent of the law.

Date: 2024/4/10

Report No. :TESA2402000084ES
Dipole 1900 MHz_SN:5d056
Communication System: CW; Frequency: 1900 MHz;Duty Cycle= 1:1
Medium parameters used: f = 1900 MHz; σ = 1.447 S/m; ε_r = 40.957; ρ = 1000 kg/m^3
Phantom section: Flat Section
Ambient temperature: 22.3°C; Liquid temperature: 22.1℃

DASY5 Configuration:

- Probe: EX3DV4 - SN7642; ConvF(8.16, 8.04, 7.99) @ 1900 MHz; Calibrated: 2024/2/21
- Sensor-Surface: 2mm (Mechanical Surface Detection)
- Electronics: DAE4 Sn1719; Calibrated: 2024/1/17
- Phantom: ELI
- DASY52 52.10.4(1527); SEMCAD X 14.6.14(7483)

Area Scan (51x91x1): Interpolated grid: dx=15 mm, dy=15 mm
Maximum value of SAR (interpolated) = 14.4 W/kg

Zoom Scan (7x7x7)/Cube 0: Measurement grid: dx=5mm, dy=5mm, dz=5mm
Reference Value = 97.51 V/m; Power Drift = -0.16 dB
Peak SAR (extrapolated) = 15.6 W/kg
SAR(1 g) = 9.55 W/kg; SAR(10 g) = 5.22 W/kg
Smallest distance from peaks to all points 3 dB below = 10 mm
Ratio of SAR at M2 to SAR at M1 = 61.3%
Maximum value of SAR (measured) = 13.1 W/kg

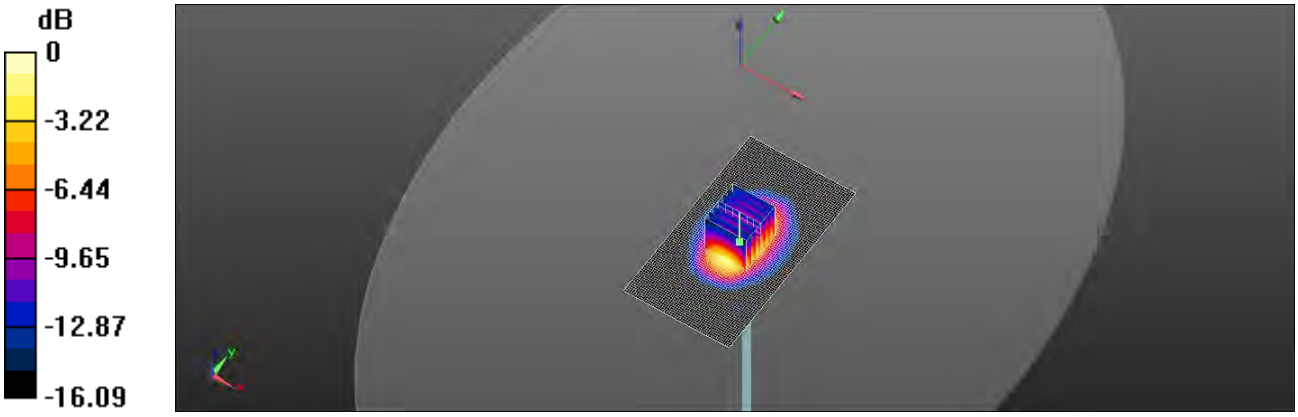

0 dB = 13.1 W/kg = 11.17 dBW/kg

Unless otherwise stated the results shown in this test report refer only to the sample(s) tested and such sample(s) are retained for 90 days only.
除非另有說明，此報告結果僅對測試之樣品負責，同時此樣品僅保留90天。本報告未經本公司書面許可，不可部份複製。
This document is issued by the Company subject to its General Conditions of Service printed overleaf, available on request or accessible at http://www.sgs.com.tw/Terms-and-Conditions and for electronic format documents, subject to Terms and Conditions for Electronic Documents at http://www.sgs.com.tw/Terms-and-Conditions. Attention is drawn to the limitation of liability, indemnification and jurisdiction issues defined therein. Any holder of this document is advised that information contained hereon reflects the Company's findings at the time of its intervention only and within the limits of Client's instructions, if any. The Company's sole responsibility is to its Client and this document does not exonerate parties to a transaction from exercising all their rights and obligations under the transaction documents. This document cannot be reproduced except in full, without prior written approval of the Company. Any unauthorized alteration, forgery or falsification of the content or appearance of this document is unlawful and offenders may be prosecuted to the fullest extent of the law.

Date: 2024/4/16

Report No. :TESA2402000084ES
Dipole 1900 MHz_SN:5d056
Communication System: CW; Frequency: 1900 MHz;Duty Cycle: 1:1
Medium parameters used: f = 1900 MHz; σ = 1.45 S/m; ε_r = 40.786; ρ = 1000 kg/m^3
Phantom section: Flat Section
Ambient temperature: 22.5°C; Liquid temperature: 22.3℃

DASY5 Configuration:

- Probe: EX3DV4 - SN7642; ConvF(8.16, 8.04, 7.99) @ 1900 MHz; Calibrated: 2024/2/21
- Sensor-Surface: 2mm (Mechanical Surface Detection)
- Electronics: DAE4 Sn1719; Calibrated: 2024/1/17
- Phantom: ELI
- DASY52 52.10.4(1527); SEMCAD X 14.6.14(7483)

Area Scan (51x91x1): Interpolated grid: dx=15 mm, dy=15 mm
Maximum value of SAR (interpolated) = 14.3 W/kg

Zoom Scan (7x7x7)/Cube 0: Measurement grid: dx=5mm, dy=5mm, dz=5mm
Reference Value = 91.17 V/m; Power Drift = -0.13 dB
Peak SAR (extrapolated) = 15.7 W/kg
SAR(1 g) = 9.53 W/kg; SAR(10 g) = 5.21 W/kg
Smallest distance from peaks to all points 3 dB below = 10 mm
Ratio of SAR at M2 to SAR at M1 = 61.2%
Maximum value of SAR (measured) = 13.1 W/kg

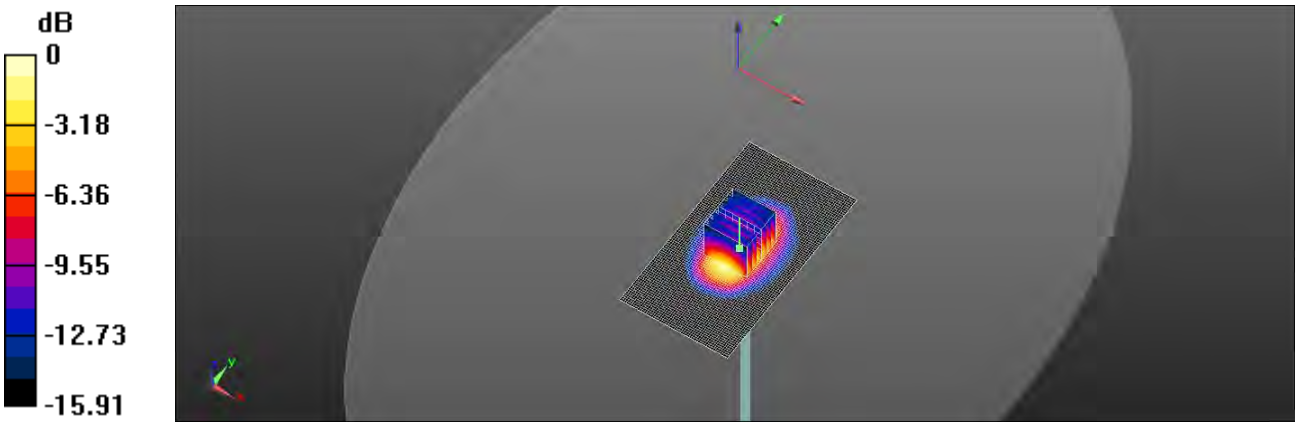

0 dB = 13.1 W/kg = 11.18 dBW/kg

Unless otherwise stated the results shown in this test report refer only to the sample(s) tested and such sample(s) are retained for 90 days only.
除非另有說明，此報告結果僅對測試之樣品負責，同時此樣品僅保留90天。本報告未經本公司書面許可，不可部份複製。
This document is issued by the Company subject to its General Conditions of Service printed overleaf, available on request or accessible at http://www.sgs.com.tw/Terms-and-Conditions and for electronic format documents, subject to Terms and Conditions for Electronic Documents at http://www.sgs.com.tw/Terms-and-Conditions. Attention is drawn to the limitation of liability, indemnification and jurisdiction issues defined therein. Any holder of this document is advised that information contained hereon reflects the Company's findings at the time of its intervention only and within the limits of Client's instructions, if any. The Company's sole responsibility is to its Client and this document does not exonerate parties to a transaction from exercising all their rights and obligations under the transaction documents. This document cannot be reproduced except in full, without prior written approval of the Company. Any unauthorized alteration, forgery or falsification of the content or appearance of this document is unlawful and offenders may be prosecuted to the fullest extent of the law.

Date: 2024/3/21

Report No. :TESA2402000084ES
Dipole 2450 MHz_SN:728
Communication System: CW; Frequency: 2450 MHz;Duty Cycle= 1:1
Medium parameters used: f = 2450 MHz; σ = 1.858 S/m; ε_r = 40.185; ρ = 1000 kg/m^3
Phantom section: Flat Section
Ambient temperature: 22.4°C; Liquid temperature: 22.2℃

DASY5 Configuration:

- Probe: EX3DV4 - SN7642; ConvF(7.74, 7.66, 7.62) @ 2450 MHz; Calibrated: 2024/2/21
- Sensor-Surface: 2mm (Mechanical Surface Detection)
- Electronics: DAE4 Sn1719; Calibrated: 2024/1/17
- Phantom: ELI
- DASY52 52.10.4(1527); SEMCAD X 14.6.14(7483)

Area Scan (71x111x1): Interpolated grid: dx=12 mm, dy=12 mm
Maximum value of SAR (interpolated) = 20.8 W/kg

Zoom Scan (7x7x7)/Cube 0: Measurement grid: dx=5mm, dy=5mm, dz=5mm
Reference Value =94.78 V/m; Power Drift = -0.15 dB
Peak SAR (extrapolated) = 23.5 W/kg
SAR(1 g) = 13.2 W/kg; SAR(10 g) = 6.48 W/kg
Smallest distance from peaks to all points 3 dB below = 9 mm
Ratio of SAR at M2 to SAR at M1 = 57.2%
Maximum value of SAR (measured) = 18.9 W/kg

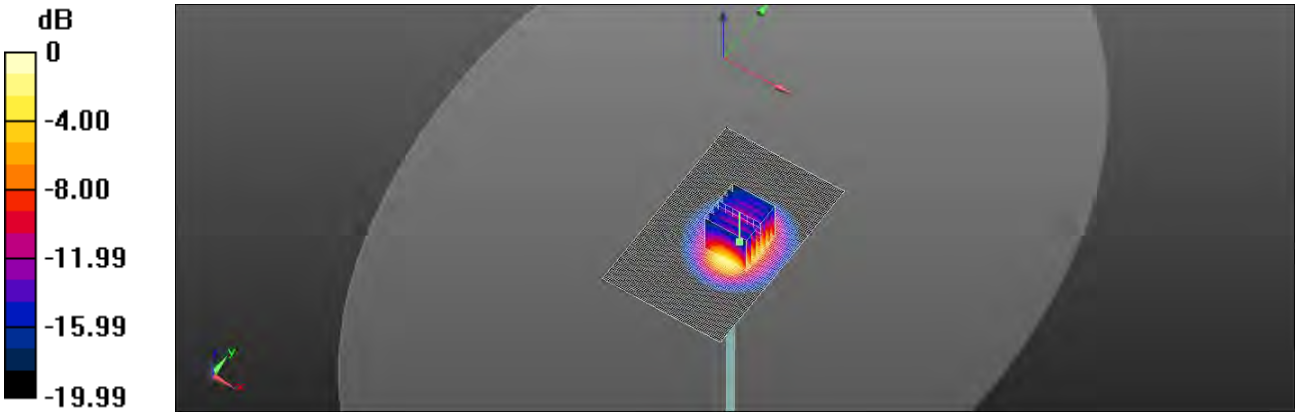

0 dB = 18.9 W/kg = 12.77 dBW/kg

Unless otherwise stated the results shown in this test report refer only to the sample(s) tested and such sample(s) are retained for 90 days only.
除非另有說明，此報告結果僅對測試之樣品負責，同時此樣品僅保留90天。本報告未經本公司書面許可，不可部份複製。
This document is issued by the Company subject to its General Conditions of Service printed overleaf, available on request or accessible at http://www.sgs.com.tw/Terms-and-Conditions and for electronic format documents, subject to Terms and Conditions for Electronic Documents at http://www.sgs.com.tw/Terms-and-Conditions. Attention is drawn to the limitation of liability, indemnification and jurisdiction issues defined therein. Any holder of this document is advised that information contained hereon reflects the Company's findings at the time of its intervention only and within the limits of Client's instructions, if any. The Company's sole responsibility is to its Client and this document does not exonerate parties to a transaction from exercising all their rights and obligations under the transaction documents. This document cannot be reproduced except in full, without prior written approval of the Company. Any unauthorized alteration, forgery or falsification of the content or appearance of this document is unlawful and offenders may be prosecuted to the fullest extent of the law.

Date: 2024/4/16

Report No. :TESA2402000084ES
Dipole 2450 MHz_SN:728
Communication System: CW; Frequency: 2450 MHz;Duty Cycle: 1:1
Medium parameters used: f = 2450 MHz; σ = 1.847 S/m; ε_r = 39.983; ρ = 1000 kg/m^3
Phantom section: Flat Section
Ambient temperature: 22.5°C; Liquid temperature: 22.3℃

DASY5 Configuration:

- Probe: EX3DV4 - SN7642; ConvF(7.74, 7.66, 7.62) @ 2450 MHz; Calibrated: 2024/2/21
- Sensor-Surface: 2mm (Mechanical Surface Detection)
- Electronics: DAE4 Sn1719; Calibrated: 2024/1/17
- Phantom: ELI
- DASY52 52.10.4(1527); SEMCAD X 14.6.14(7483)

Area Scan (71x111x1): Interpolated grid: dx=12 mm, dy=12 mm
Maximum value of SAR (interpolated) = 19.8 W/kg

Zoom Scan (7x7x7)/Cube 0: Measurement grid: dx=5mm, dy=5mm, dz=5mm
Reference Value = 91.45 V/m; Power Drift = -0.09 dB
Peak SAR (extrapolated) = 22.4 W/kg
SAR(1 g) = 12.7 W/kg; SAR(10 g) = 6.31 W/kg
Smallest distance from peaks to all points 3 dB below = 9 mm
Ratio of SAR at M2 to SAR at M1 = 57.2%
Maximum value of SAR (measured) = 18.0 W/kg

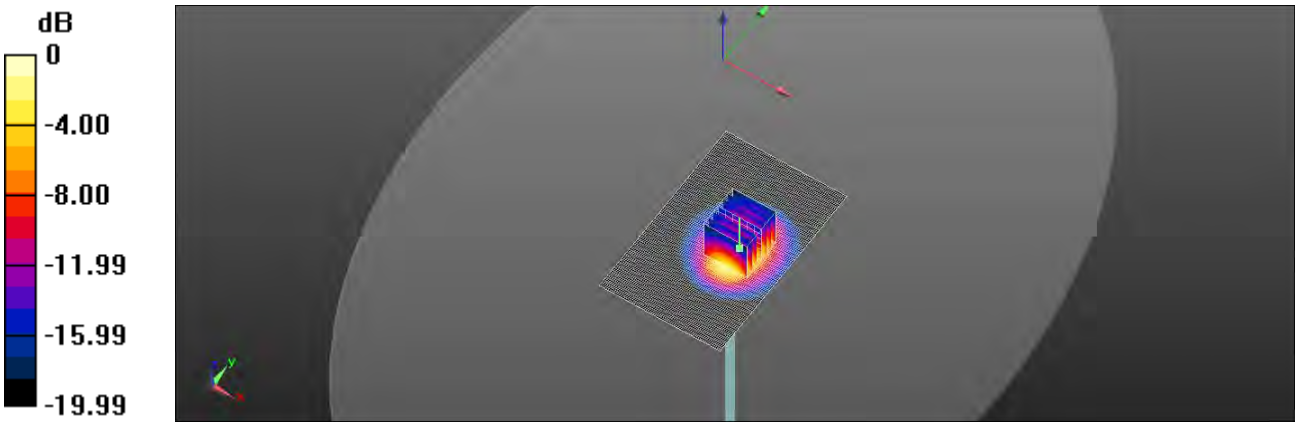

0 dB = 18.0 W/kg = 12.56 dBW/kg

Unless otherwise stated the results shown in this test report refer only to the sample(s) tested and such sample(s) are retained for 90 days only.
除非另有說明，此報告結果僅對測試之樣品負責，同時此樣品僅保留90天。本報告未經本公司書面許可，不可部份複製。
This document is issued by the Company subject to its General Conditions of Service printed overleaf, available on request or accessible at http://www.sgs.com.tw/Terms-and-Conditions and for electronic format documents, subject to Terms and Conditions for Electronic Documents at http://www.sgs.com.tw/Terms-and-Conditions. Attention is drawn to the limitation of liability, indemnification and jurisdiction issues defined therein. Any holder of this document is advised that information contained hereon reflects the Company's findings at the time of its intervention only and within the limits of Client's instructions, if any. The Company's sole responsibility is to its Client and this document does not exonerate parties to a transaction from exercising all their rights and obligations under the transaction documents. This document cannot be reproduced except in full, without prior written approval of the Company. Any unauthorized alteration, forgery or falsification of the content or appearance of this document is unlawful and offenders may be prosecuted to the fullest extent of the law.

13 APPENDIXES

Refer to separated files for the following appendixes.

13.1 SAR_Appendix A Photographs

13.2 SAR_Appendix B DAE & Probe Cal. Certificate

13.3 SAR_Appendix C Phantom Description & Dipole Cal. Certificate

- End of report -

Unless otherwise stated the results shown in this test report refer only to the sample(s) tested and such sample(s) are retained for 90 days only.
除非另有說明，此報告結果僅對測試之樣品負責，同時此樣品僅保留90天。本報告未經本公司書面許可，不可部份複製。
This document is issued by the Company subject to its General Conditions of Service printed overleaf, available on request or accessible at http://www.sgs.com.tw/Terms-and-Conditions and for electronic format documents, subject to Terms and Conditions for Electronic Documents at http://www.sgs.com.tw/Terms-and-Conditions. Attention is drawn to the limitation of liability, indemnification and jurisdiction issues defined therein. Any holder of this document is advised that information contained hereon reflects the Company's findings at the time of its intervention only and within the limits of Client's instructions, if any. The Company's sole responsibility is to its Client and this document does not exonerate parties to a transaction from exercising all their rights and obligations under the transaction documents. This document cannot be reproduced except in full, without prior written approval of the Company. Any unauthorized alteration, forgery or falsification of the content or appearance of this document is unlawful and offenders may be prosecuted to the fullest extent of the law.