i-box

# Glow

Bluetooth connection
FS-058

## Introduction

The i-box Glow is an all-in-one bedside accessory which combines a stand for your phone, perfect for watching videos handsfree, with an integral 5W Wireless charger, Bluetooth speaker, FM radio, dual alarm and even a handy nightlight with multiple colour settings.

## Caring for your Glow Alarm

Important Safety Information

Important - Please read these instructions fully before installing or operating your speaker.

Keep away from flame sources such as lighted candles.

Do not expose to dripping or splashed fluids.

The unit should not be exposed to direct sunlight, very high or low temperature, moisture, vibrations, strong magnetic fields, high frequencies and dusty environments.

Do not place the unit in enclosed bookcases or racks without proper ventilation. Ventilation should not be impeded by covering the ventilation openings with items, such as newspapers, table-cloths, curtains, etc.

This product contains a built-in Li-ion battery. It must be used and charged properly. Improper use can cause the battery to catch fire or explode resulting in serious or fatal injury

Never attempt to insert wires, pins or other such objects into the vents or openings of the unit.

Do not disassemble or modify the speaker, there are no user serviceable parts.

If the speaker is damaged in anyway or malfunctions do not use. Consult a qualified service engineer.

Do not use abrasives, benzene, thinner or other solvents to clean the surface of the unit. To clean, wipe with clean soft cloth and a mild detergent solution.

This product uses batteries and both product an batteries should be disposed of appropriately. Do not dispose of them with household waste at the end of their life cycle; take them to a collection centre for the recycling of electrical, electronic appliances and batteries. Please check with your Local Authority for recycling advice.

## Contents


### 1. Safety information

Introduction 2
Safety information 3

### 2. Getting to know your speaker/charger

Controls & features 5
Back - connections 6
Base - battery compartment 6

### 3. Getting started

Powering your Glow 6
Setting the time 6
Bluetooth pairing 6
Bluetooth play operation 7
FM Radio operation 7
FM Presets 7
White noise & nature sounds 7
Sleep function 7
Setting the alarms 8
Snooze & stop alarm 8
Wireless charging 8
Wireless charging problems 9
USB charging 9
Nightlight settings 9
Dimmer settings 10

### 4. Other Information

Specifications 8
Disclaimer 8
Declaration of conformity 8
Technical support 8

## Box Contents

1x i-box Glow speaker, 1x 5V⎓3.5A AC/DC power adaptor

## Getting to know your Glow alarm clock

Before you get started please read the safety information on pages 2-3.

## Top - Control Panel

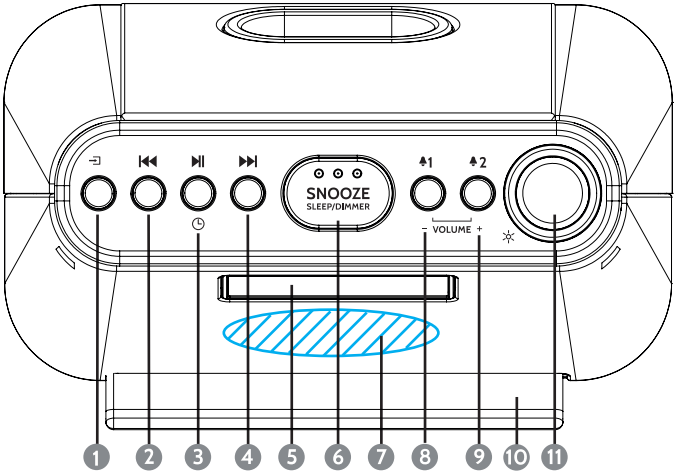


1. Mode FM/BT/Sounds - short press to change mode, long press to enter standby mode
2. Previous track
3. Play/Pause
4. Next track
5. LCD Display
6. Snooze - short press (when alarm is sounding)

6. Sleep mode - long press to enter - short press to set sleep time

6. Dimmer - short press to adjust brightness
7. Wireless charging area
8. 1 Alarm 1/Volume -
9. 2 Alarm 1/Volume +
10. Phone stand
11. Nightlight On/Change colour - short press, Nightlight Off - long press

## Back

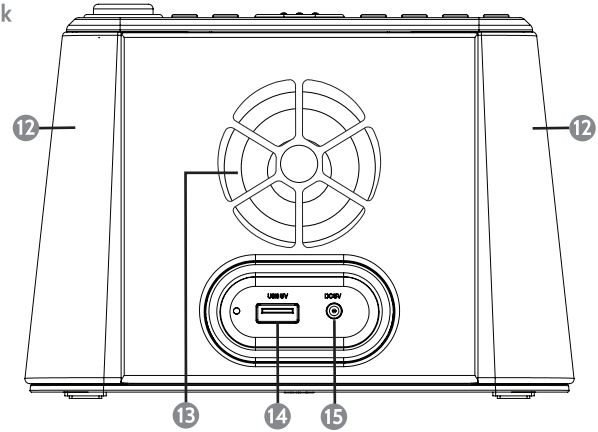


## Base

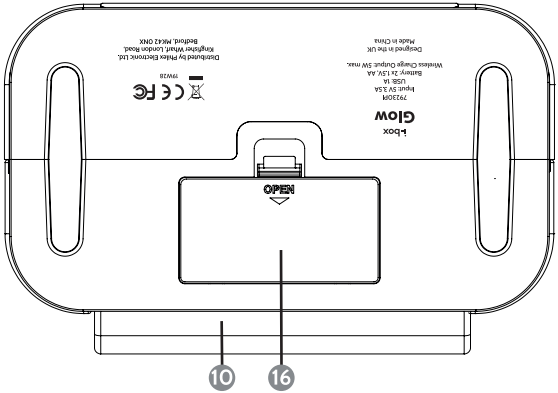


10. Phone stand
12. Nightlight
13. Speaker
14. USB charging port
15. DC adaptor jack
16. Back up battery compartment door

## Powering your Glow alarm clock

The Glow is powered by the AC/DC power adaptor supplied. Plug the adaptor into a mains socket and then connect to the DC power socket (16) on the back of the Glow. The Glow will switch on automatically in clock/standby mode and the LCD will light up.

## Battery backup

In addition to the DC In power supply you can fit 2 x AA batteries (not supplied) in the battery compartment (17) to provide a backup power supply. If the mains supply is disconnected or interrupted the power supply is automatically switched to the backup battery, so that the time and alarm settings are not lost. Please Note: speaker, radio and charging functions will not operate when the Glow is powered solely by the back-up batteries. When fitting the batteries make sure their polarity matches the markings in the battery compartment.

## Setting the time

1. Plug in the AC/DC power adaptor supplied, the default time 0:00 will appear in the LCD display (5).
2. Long press the clock key (3), the LCD will display "24hr" press the ⏮ (2) or ⏭ (4) keys to switch between 24hr and 12hr clock setting.
3. Then press the clock key (3) again to set the hour use the ⏮ (2) or ⏭ (4) keys to change the hour.
4. Press the clock key (3) to set the minutes use the ⏮ (2) or ⏭ (4) keys to change the minutes.
5. Press the clock key (3) again to confirm the time set.

To reset the clock, long press the mode key (1) to enter standby mode then follow steps 2-5 above.

## Bluetooth pairing

1. Press the mode key (1) twice to enter Bluetooth pairing mode. "***bt***" will appear in the display and also the Bluetooth symbol which will flash.
2. Place the device you want to pair with your Glow within 1m of it, enter your device's Bluetooth menu and select "i-box Glow" in the device list. When your Glow and device are paired, you will hear a chime and the Bluetooth symbol which will stop flashing.

Once paired with a device the Glow will reconnect automatically when switched to Bluetooth mode if the paired device is within range.

## Bluetooth play operation

While listening to audio in Bluetooth mode:

1. Press Volume **+/–** keys (8/9) to increase or reduce the volume level.
2. Press the ⏭ Next (4) or ⏮ Previous (2) keys to play the next or previous track.
3. Press the ⏯ Pause/Play key (2) to play or pause the track.

## FM radio operation

1. Press the ⇥ Mode key (1) repeatedly until FM and an FM frequency appear in the LCD display.
2. Long press the ⏮ (2) or ⏭ (4) keys to scan backwards or forwards through the frequencies to the previous or next radio station.

## FM presets - storing and recall

To store the station playing to a preset long press the ⏯ Play/Pause key (3) a flashing preset number will be displayed, press the ⏭ (4) or ⏮ (2) keys to scroll through the 10 preset positions. To store the station playing to the preset position selected and to exit store mode press the ⏯ Play/Pause key (3) again.

To recall a preset stored station short press the ⏯ Play/Pause key (3) and press the ⏭ (4) or ⏮ (2) keys to scroll through the presets available to the one you want to play.

## White noise and nature soundtrack mode

This mode allows you to play white noise or a selection of nature soundtracks to help lull you to sleep. You can also use the SLEEP function to switch these sounds off after a set period of time. Soundtracks available are: ***♫-1***: White noise soundtrack, ***♫-2***: Frog soundtrack, ***♫-3***: Flowing water soundtrack and ***♫-4***: Birdsong soundtrack.

1. Press the ⇥ mode key (1) three times to enter this mode. "***♫-1***" will appear in the display and the White Noise soundtrack will play.
2. Press ⏮ (2) or ⏭ (4) to scroll through the soundtracks available.
3. Press Volume **+/–** keys (8/9) to increase or reduce the soundtrack volume level.

## Sleep function

1. With audio playing via Bluetooth or the radio playing or with one of the nature soundtracks playing, long press the SNOOZE Sleep key (6) to enter Sleep mode.
2. Short press the SNOOZE key (6) repeatedly to scroll through Sleep settings available: ***120, 90, 60, 30, 15, 10, 05, OFF***. "SLEEP" will appear in the LCD panel.
3. When sleep is set long press the SNOOZE key (6) to check the sleep period remaining.

## Setting the alarms

You have a choice of two alarms you can set, ideal for couples who need to get up at different times.

1. First long press the ⇥ mode key (1) to enter standby mode, press and hold 🔔 **1** alarm 1 key (8) for 3 seconds, to start setting the time for alarm 1.
2. Press ⏮ (2) or ⏭ (4) to change the hour then press 🔔 **1** alarm 1 key (8) to select.
3. Press ⏮ (2) or ⏭ (4) to change the minutes then press 🔔 **1** key (8) to select.
4. Press ⏮ (2) or ⏭ (4) to scroll through the alarm sound options - **FM** (Radio), ***"bP"*** (Bleep), ***n-1*** (White Noise), ***n-2*** (Frog Soundtrack), ***n-3*** (Flowing Water Soundtrack), ***n-4*** (Birdsong Soundtrack), press 🔔 **1** key (8) to select an option and to exit the alarm setting mode.

To set alarm 2 repeat steps 1-4 above using the 🔔 **2** alarm 2 key (9).

## Alarm enable/disable

In standby mode, press 🔔 **1** (8) or 🔔 **2** (9) to enable or disable the alarm

## Snooze & stop alarm

When the alarm sounds, press the SNOOZE Snooze key (6 ) to delay the alarm for 9 minutes. Press any other key to turn the alarm off.

## Wireless charging

If you have a phone with Qi wireless charging capability you can use your Glow to charge it.
Thanks to the positioning of the charging pad it is easy to watch movies, look at recipes, make video calls and much more while your phone is charging.

1. Place your smart phone centrally on the phone stand (10). As shown opposite.
2. The (((•))) wireless charging icon will be displayed in the bottom left of the LCD panel while your phone is charging and the battery charge status can be seen on your phone's display.

Please Note: Your phone will not charge when the Glow is in backup mode (not being powered via the USB socket).

Wireless charging may interfere with radio reception and we advise you not to try listening to FM radio while charging.

## If problems occur when charging or if charging does not start

- Remove your smartphone from its case if the thickness of the case exceeds 5mm or if it has a metal composition.
- Phones that are capable of wireless charging may need to be placed slightly off centre. The built-in wireless receiver may not be centred inside the phone. This varies by brand/model.
- The charging time varies depending on the charging capacity of the battery and its current residual capacity.
- The components may heat up during the charging process. They will slowly cool down again after the charging process.

**WARNING:** If the (((•))) wireless charging icon flashes repeatedly a foreign metal object has been detected. You should remove it from the charging area immediately as it can represent a hazard and could cause a fire.

## USB Charging

For phones and other devices that don't have Qi charging capability you can charge them using them using the USB charging port (14) located on the back panel of your Glow.

1. Connect your phone via a suitable USB charging cable (not supplied) to the USB charging port (14) on the back of the Glow.
2. The charge state is indicated on your phone/external device as usual.

Please Note:

- USB Charging may interfere with radio reception and we advise you not to try listening to FM radio while charging..
- Please use only one charging method at a time.
- Do not attempt to charge your device with wireless charger & USB cable both at the same time.

## Nightlight

1. Short press the ☼ Nighlight key (11) to turn on the LED nightlight panels (12).
2. Short Press the ☼ Nighlight key (11) repeatedly to scroll through the different colours options available: Cool White, Warm White, Blue, Green, Red, Purple and the sixth option in which the LED slowly cycles through a spectrum of multiple colours .
3. Long Press the ☼ Nighlight key (11) to switch the Nightlight OFF.

## Dimmer function

1. Short press the SNOOZE SLEEP/DIMMER Snooze/Sleep/Dimmer key (6) repeatedly to select your preferred light level for the LCD panel. There are six levels including off.

## Specifications

Glow power Input: 5V⎓3.5A
Speaker Output: 1x 3W RMS
Wireless Charging Output: 5W
USB Charging Output: 1A
Back up battery requirement: 2x 1.5V AA Alkaline batteries
Power Adaptor Input: 100~240V~50/0Hz, 0.75A

FCC Warning Statement

Changes or modifications not expressly approved by the party responsible for compliance could void the user's authority to operate the equipment. This equipment has been tested and found to comply with the limits for a Class B digital device, pursuant to Part 15 of the FCC Rules. These limits are designed to provide reasonable protection against harmful interference in a residential installation. This equipment generates uses and can radiate radio frequency energy and, if not installed and used in accordance with the instructions, may cause harmful interference to radio communications. However, there is no guarantee that interference will not occur in a particular installation. If this equipment does cause harmful interference to radio or television reception, which can be determined by turning the equipment off and on, the user is encouraged to try to correct the interference by one or more of the following measures:

- - Reorient or relocate the receiving antenna.
- - Increase the separation between the equipment and receiver.
- - Connect the equipment into an outlet on a circuit different from that to which the receiver is connected. - - Consult the dealer or an experienced radio/TV technician for help.

This device complies with part 15 of the FCC Rules. Operation is subject to the following two conditions: (1) This device may not cause harmful interference, and (2) this device must accept any interference received, including interference that may cause undesired operation.

## RF Exposure Statement

To maintain compliance with FCC's RF Exposure guidelines, This equipment should be installed and operated with minimum distance of 20Cm the radiator your body. This device and its antenna(s) must not be co-located or operation in conjunction with any other antenna or transmitter

## Disclaimer

Updates to Firmware and/or hardware components are made regularly. Therefore some of the instructions, specifications and pictures in this documentation may differ slightly from your particular situation. All items described in this guide are for illustration purposes only and may not apply to your particular situation. No legal right or entitlements may be obtained from the description made in this manual.

## Declaration of conformity

Hereby, Philex Electronic Ltd. declares that the radio equipment: model i-box Glow Alarm Clock with Bluetooth Speaker, Wireless Charging and Nightlight for wireless reception in domestic premises is in compliance with the Radio Equipment Directive 2014/53/EU. The full text of the EU declaration of conformity is available at the following internet address: www.philex.com/doc

## Technical support

For further help, advice, information or live chat visit www.iboxstyle.com

Waste electrical and electronic products should not be disposed of with household waste. Please recycle where facilities exist. Check with your Local Authority for recycling advice.

© Philex Electronic Ltd 2019. v1.2
Kingfisher Wharf, London Road,
Bedford, MK42 0NX UK
Made in China.