Bucket Shield and Bucket Module Cartridge Installation

This instruction describes the installation of a GET Detect System Bucket Module Shield weldment to a bucket along with installation of a Bucket Module Cartridge containing the Bucket Sensor. The sensor communicates bucket motion and position information to the ESCO Control Module (ECM) via antennas and displays GET Detect messages to the operator on the In-Cab Display (ICD).

The installation of a functioning GET Detect system is required to complete the commissioning of the bucket sensor using the In Cab Display.

Before attempting to install the bucket module assembly, read these instructions carefully.

Installation Kit

- Bucket Shield Assembly, Part #4288962
  - Bucket Shield Weldment
  - (2) M14 x 2.00mm x 30mm socket head cap screw (SHCS)
- Bucket Module Cartridge Assembly, Part #4288963
  - Bucket Cartridge Assembly
  - Bucket Sensor Electronic Assembly

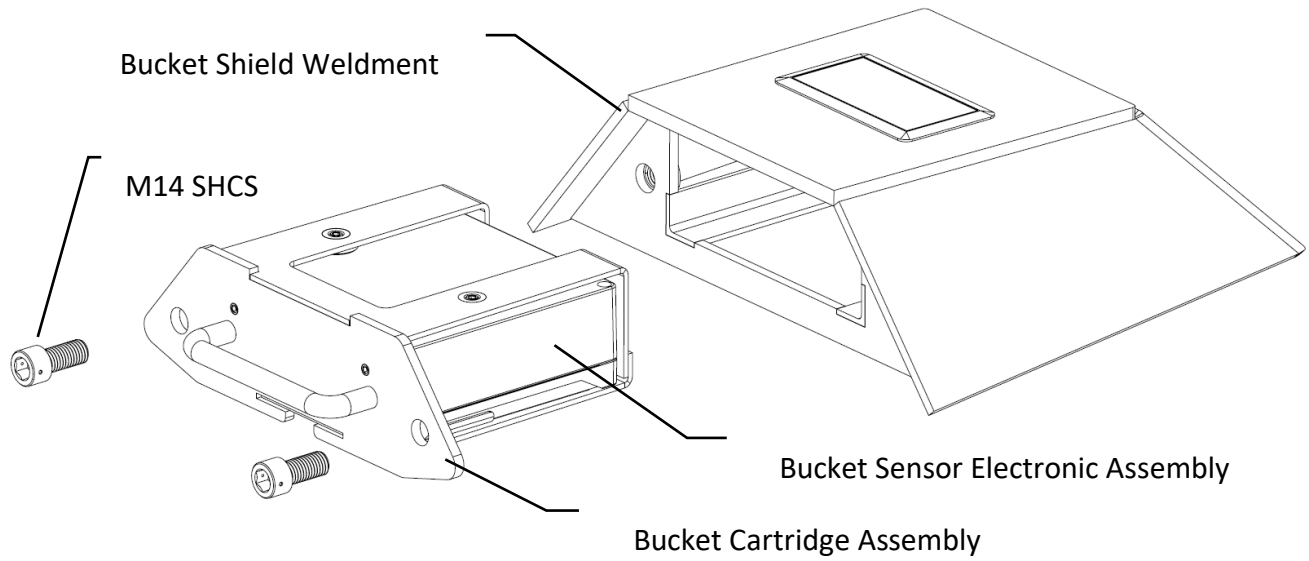

Tools Required

- Welder
- Angle grinder with flapwheel
- Scribe, soapstone, or other marking tool
- 12 mm hex bit
- Side cutters
- Safety wire pliers

Materials Required

- Safety wire, 0.032-inch stainless
- Paint (optional)

Reference Documents

The following documents should be available from your site maintenance supervisor. They are also available on the ESCO web site (access through customer portal).

ESCO Welding Procedures (document P6000GEN) for general welding instructions for ESCO alloys.

ESCO Supplemental Welding Procedures (document P6002GEN) for heavy weld-on adapter and cast corner installation.

Part 1: Bucket Shield Assembly Installation

Safety Considerations During Installation

1. Working at height
    - Follow safety procedures when working at height or on an elevated work platform.
    - Wear the appropriate PPE required for working at height.
    - When components are carried onto the bucket, the risk of objects falling is present.
2. Welding
    - Follow site standards and procedures for welding applications.
    - At no time should heat (welding, flame, etc.) be applied to the Bucket Shield or Bucket Cartridge when the Bucket Sensor Electronic Assembly is present.

3. Hands
    - Wear gloves when handling components.
    - Pinch and crush points are potential risks while fitting the shield and inserting the cartridge.
4. Lithium Battery
    - The Bucket Sensor Electronic Assembly contains a lithium ion battery which could create a risk of explosion if heat were to be applied to the battery.
    - Avoid the use of pry bars and hammers in proximity of the Bucket Sensor Electronic Assembly. This increases the risk of battery puncture which may create a hazard.
    - Disposal of this module should comply with electronic disposal requirements.

Location Requirements

The location and placement of the Bucket Shield and Bucket Module Cartridge Assemblies must satisfy the following criteria:

A. Does not impede the operation or maintenance of the bucket or machine in any way (hydraulic cylinder movement, hatch access, connecting lug pin removal/installation)
B. Is oriented correctly for proper operation of the Bucket Sensor Electronic Assembly
C. Allows removal and installation range of motion of the Bucket Cartridge
D. Ensures transmissions from the Bucket Sensor Electronic Assembly can be received by the GET Detect Antenna (i.e., there is no significant steel structure obstructing transmission, an antenna mounted on a machine rail can be pointed toward it…)

Some considerations when choosing a proper location and preparing for installation:

1. The Bucket Shield must be oriented such that when installed, the Bucket Cartridge handle will be parallel to the bucket pin connections, and the mounting fasteners will face down.

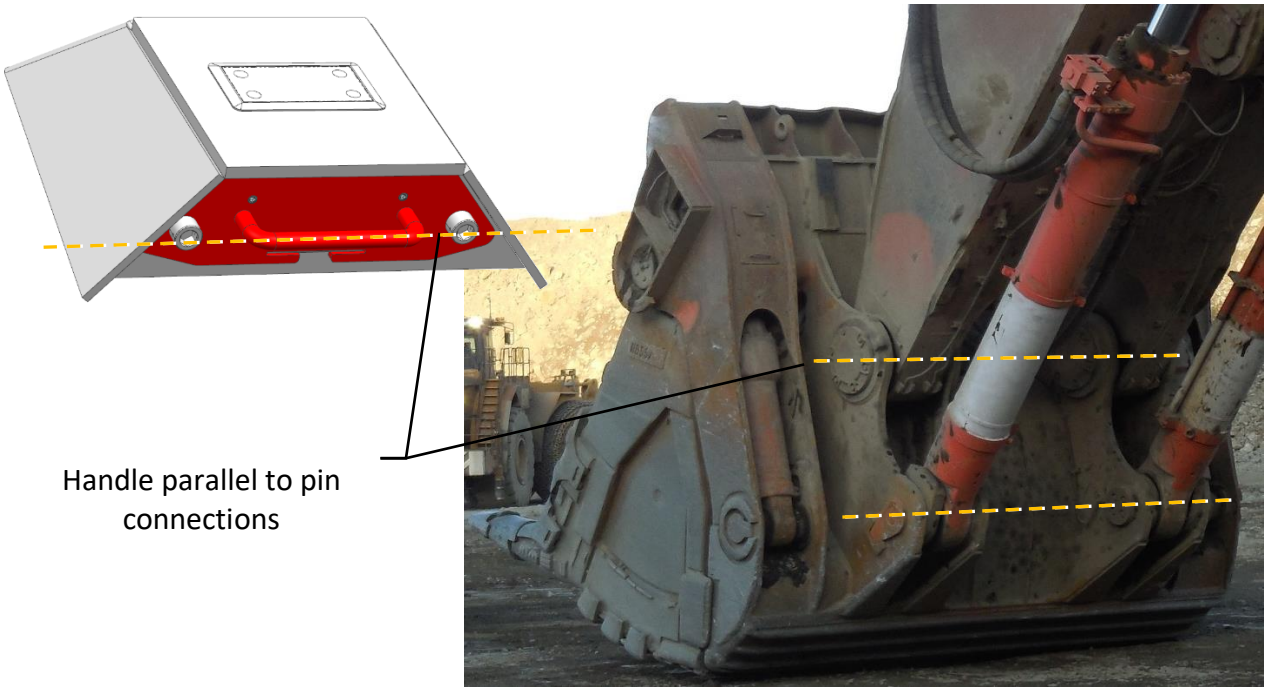

2. Locate the Bucket Shield near the top of the bucket, out of the material flow path, and to the far right or left side. Example locations for both face shovels and hoe excavators are shown below:

   Face Shovel:

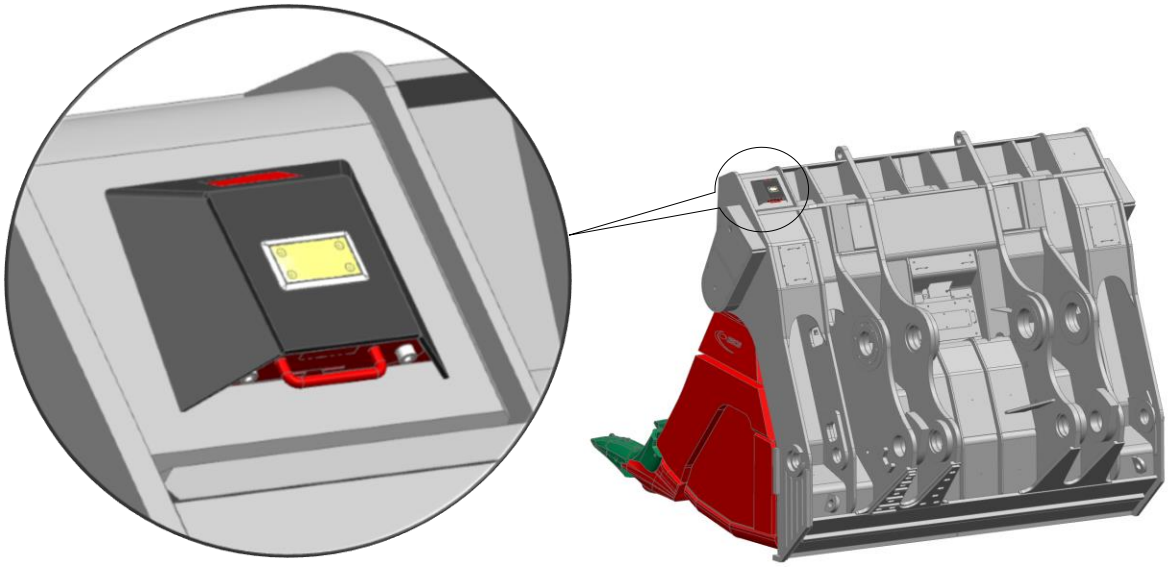

   Hoe Excavator:

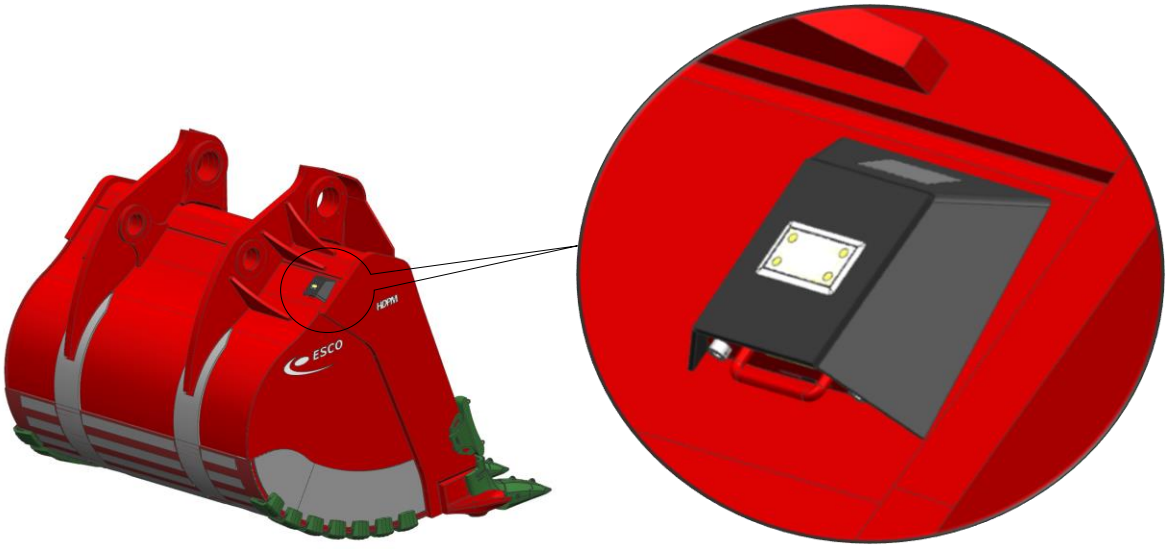

3. The Bucket Shield should be visible to the operator at some time during normal machine use, preferably during the bucket dump cycle.

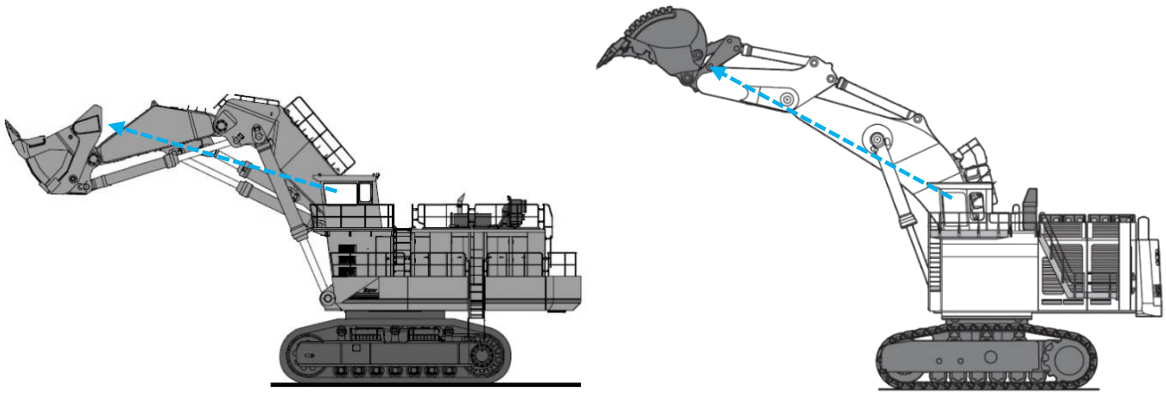

4. Choose a flat surface on the back of the bucket; the installed Bucket Shield footprint (green outline below) will be approximately 37cm wide x 30cm long [14.5” x 11.5”] with an additional clearance area of 37cm wide x 20cm long [14.5” x 8”] for Bucket Cartridge installation and removal (yellow area below):

5. Position the Bucket Shield such that any gussets or ribs on the bucket structure do not impede access to or removal of the Bucket Cartridge.

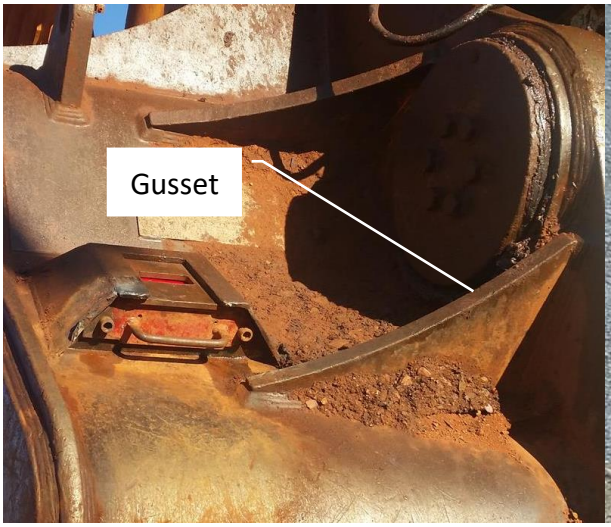

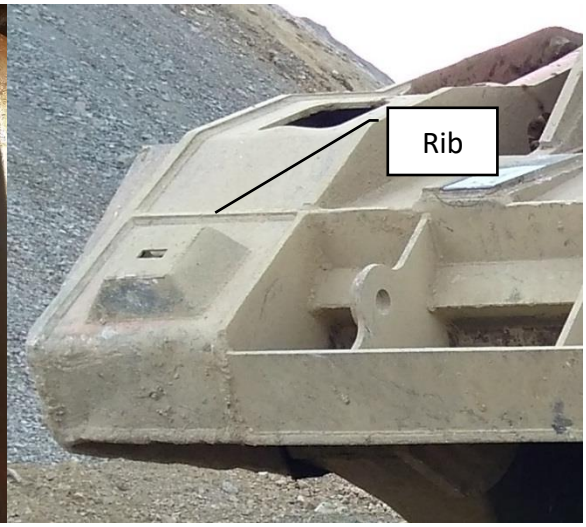

Installation Procedure

1. Identify a location on the bucket that meets the location requirements. Before continuing, obtain site maintenance approval.

2. Test clearance for Bucket Cartridge insertion and removal.

   a. Place the Bucket Shield on the chosen area.

Hold Bucket to the bucket, then check for sufficient clearance for Cartridge insertion.

   b. While holding the Bucket Shield to the bucket, insert the Bucket Cartridge, then remove it. **Do not weld on the Bucket Shield with the Bucket Cartridge inside.**

   Make sure there is no interference with removing the Bucket Cartridge.

   [CAUTION] Pinch hazard. Where the Bucket Cartridge and the Bucket Shield meet is a pinch hazard area. Watch your fingers when inserting the Cartridge.

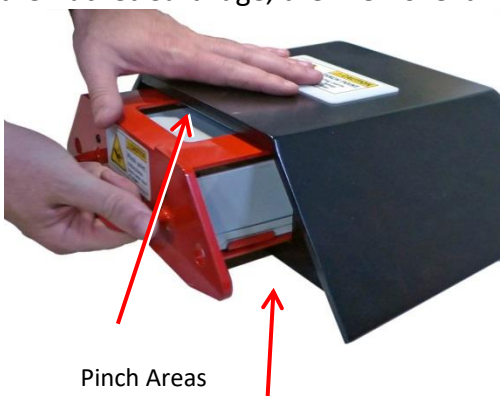

Pinch Areas

3. Scribe a line tracing the edge of the Bucket Shield where it meets the bucket surface.

Scribe perimeter of the Shield to indicate weld prep area.

4. Prep the Bucket Shield and the scribed area on the bucket for welding by removing any paint or scale.
5. Weld the Bucket Shield to the bucket using a ½” minimum fillet weld around the sides and rear of the Shield.

   Do not allow any weld in or along the Bucket Cartridge insertion area of the Shield as it could interfere with installation and removal of the Cartridge.

6. After the weld has cooled, paint or otherwise protect the weld area in accordance with the work site’s recommended practice (optional).

Part 2: Bucket Module Cartridge Installation

1. Note the sensor Mac Address is on the side of the Bucket Sensor Electronic Assembly. This will be needed for Sensor commissioning later.

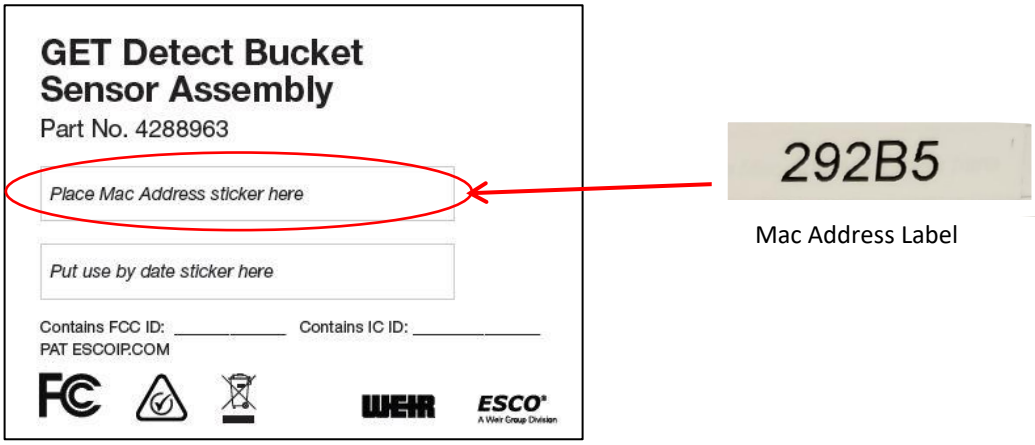

2. Ensure that any welding of the Bucket Shield has cooled.

3. Insert the Bucket Module Cartridge Assembly into the Bucket Shield.

4. Secure the Bucket Module Cartridge Assembly to the Bucket Shield using the two (2) M14 socket head cap screws and a 12mm hex bit.

5. Install safety wire through the drilled heads of the M14 screws, around the Bucket Module Cartridge Assembly handle. Twist using the safety wire pliers and snip the excess. Secure the loose end of the twisted pair to prevent snagging.

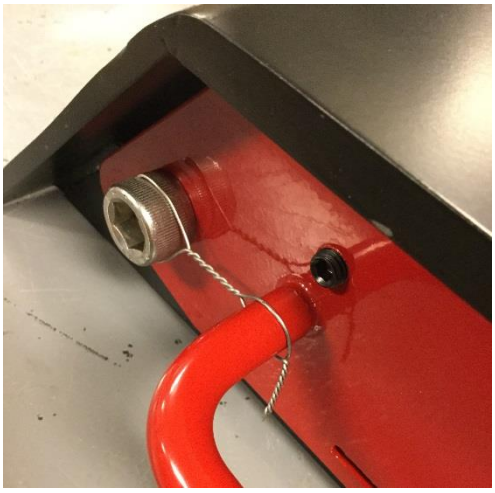

ESCO®
A Weir Group Division

2141 NW 25th Avenue
Portland, OR 97210-2578

T + 1 405.555.1212
F + 1 405.555.1212
www.esco.weir

Regulatory Notices

Regulatory Notices

- FCC ID: 2ASXK65507
- Changes or modifications not expressly approved by the party responsible for compliance could void the user's authority to operate the equipment. The manufacturer is not responsible for any radio or television interference caused by un-authorized modifications to this equipment. Such modifications could void the user's authority to operate the equipment.
- This device complies with part 15 of the FCC Rules. Operation is subject to the following two conditions: (1) This device may not cause harmful interference, and (2) this device must accept any interference received, including interference that may cause undesired operation.

ICES-003

- IC: 24947-65507
- This device complies with Industry Canada license-exempt RSS standard(s). Operation is subject to the following two conditions: (1) this device may not cause interference, and (2) this device must accept any interference, including interference that may cause undesired operation of the device.
- Le présent appareil est conforme aux CNR d'Industrie Canada applicables aux appareils radio exempts de licence. L'exploitation est autorisée aux deux conditions suivantes : (1) l'appareil ne doit pas produire de brouillage, et (2) l'utilisateur de l'appareil doit accepter tout brouillage radioélectrique subi, même si le brouillage est susceptible d'en compromettre le fonctionnement.
- Under Industry Canada regulations, this radio transmitter may only operate using an antenna of a type and maximum (or lesser) gain approved for the transmitter by Industry Canada. To reduce potential radio nterference to other users, the antenna type and its gain should be so chosen that the equivalent isotropically radiated power (e.i.r.p.) is not more than that necessary for successful communication.
- Conformément à la réglementation d'Industrie Canada, le présent émetteur radio peut fonctionner avec une antenne d'un type et d'un gain maximal (ou inférieur) approuvé pour l'émetteur par Industrie Canada. Dans le but de réduire les risques de brouillage radioélectrique à l'intention des autres utilisateurs, il faut choisir le type d'antenne et son gain de sorte que la puissance isotrope rayonnée équivalente (p.i.r.e.) ne dépasse pas l'intensité nécessaire à l'établissement d'une communication satisfaisante.
- This equipment complies with the ICES RF radiation exposure limits set forth for an uncontrolled environment. This equipment should be installed and operated with a minimum distance of 20cm between the radiator and any part of the human body.
- Cet équipement est conforme aux limites d'exposition aux radiations ICES définies pour un environnement non contrôlé . Cet équipement doit être installé et utilisé à une distance minimale de 20 cm entre le radiateur et une partie de votre corps.