RFbeam Microwave GmbH

# DATA SHEET

# K-LD2

radar transceiver

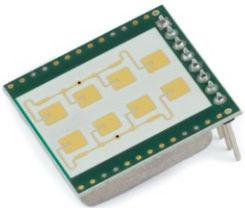

## Features

- Small and low cost digital 24 GHz radar motion detector
- Detection distance up to 15m (human) 30m (cars)
- High immunity against interferences
- Integrated FFT signal processing with digital outputs
- Sensitivity and hold time can be set using analogue inputs
- Advanced detection data read-out over serial interface
- Wide power supply range from 3.2 to 5.5V
- 2 × 4 patch antenna with 80°/34° beam aperture

## Applications

- General movement detection applications
- Door opener
- Illumination of advertising boards
- Touch free switches
- Security systems
- Indoor and outdoor lighting control applications
- Object speed measurement systems
- Industrial sensors

## Description

The K-LD2 is a fully digital and low cost radar movement detector. The digital structure makes it very easy to use in any stand-alone or MCU based application where a movement detection or speed measurement is required.

The sensor includes a 2 × 4 patch radar front-end with an asymmetrical beam and a powerful signal processing unit with two digital outputs for signal detection information. The sensitivity and the hold time are adjustable using analogue inputs with potentiometers. The serial interface features a powerful command set to read-out advanced detection data or to fully customize the detection algorithm.

There is no need to write own signal processing algorithms or handle small and noisy signals. This module contains everything that is necessary to build a simple, yet reliable movement detector.

A very small footprint of 25 × 25 × 6.5 mm gives maximum flexibility in the product development process.

A powerful evaluation kit (K-LD2-EVAL) with signal visualization on a PC is available.

## Block Diagram

**Figure 1: K-LD2 block diagram**

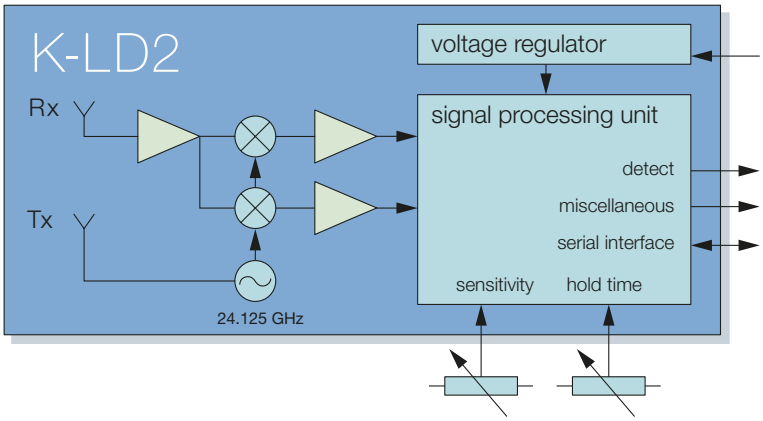

# CHARACTERISTICS

| Parameter | Conditions/Notes | Symbol | Min | Typ | Max | Unit |
|---|---|---|---|---|---|---|
| **Operating Conditions** | | | | | | |
| Supply voltage | | $V_{cc}$ | 3.2 | | 5.5 | V |
| RMS current | | $I_{RMS}$ | | 55 | | mA |
| Peak current | | $I_{peak}$ | | 65 | | mA |
| Operating temperature | | $T_{op}$ | -20 | | +85 | °C |
| Storage temperature | | $T_{st}$ | -20 | | +105 | °C |
| Relative humidity | Non-condensing, given by design | RH | 10 | | 90 | % |
| **Transmitter** | | | | | | |
| Transmitter frequency | $T_{amb}$ = -20 °C .. +85 °C | $f_{TX}$ | 24.050 | | 24.250 | GHz |
| Frequency drift vs temperature | $V_{cc}$ = 3.3 V | $\Delta f_{TX}$ | | 0.06 | | MHz/°C |
| Output power | EIRP | $P_{TX}$ | | +12 | | dBm |
| Spurious emission | According to ETSI 300 440 | $P_{Spur}$ | | | -30 | dBm |
| **Receiver** | | | | | | |
| LNA gain | | $G_{LNA}$ | | 20 | | dB |
| Mixer Conversion loss | $f_{IF}$ = 1 kHz | $D_{mixer}$ | | 6 | | dB |
| Antenna gain | $f_{TX}$ = 24.125 GHz | $G_{Ant}$ | | 8.6 | | dBi |
| Receiver sensitivity | $f_{IF}$ = 500 Hz, B = 1 kHz, S/N = 6dB | $P_{RX}$ | | -112 | | dBm |
| Overall sensitivity | $f_{IF}$ = 500 Hz, B = 1 kHz, S/N = 6dB | $D_{system}$ | | -127 | | dBc |
| Max. Detection distance | $\sigma$ = 1 m² (Person ) | R | | | 20 | m |
| **Signal Processing** | | | | | | |
| Modulation | | | | none | | |
| Velocity processing | | | | 256 point FFT | | |
| Sample rate | | $f_{sample}$ | 1.28 | | 12.8 | kHz |
| Speed range | Depending on sampling frequency | $r_{speed}$ | 0 | | 143 | km/h |
| Response time | Depending on sampling frequency and FFT average feature | $t_{detect}$ | 20 | | 400 | ms |
| **Antenna** | | | | | | |
| Horizontal –3dB beamwidth | E-Plane | $W_{\varphi}$ | | 80 | | ° |
| Vertical –3dB beamwidth | H-Plane | $W_{\theta}$ | | 34 | | ° |
| Horiz. Sidelobe suppression | | $D_{\varphi}$ | -12 | -20 | | dB |
| Vertical sidelobe suppression | | $D_{\theta}$ | -12 | -20 | | dB |
| **Interface** | | | | | | |
| Digital Output high level voltage | | $V_{OH}$ | 2.1 | 2.6 | | V |
| Digital Output low level voltage | | $V_{OL}$ | | 0.3 | 0.64 | V |
| Digital Input high level voltage | | $V_{IH}$ | 2.0 | | 3.3 | V |
| Digital Input low level voltage | | $V_{IL}$ | -0.3 | | 0.8 | V |
| Digital I/O source/sink current | | $I_{OH}, I_{OL}$ | -20 | | 20 | mA |
| Analogue Input level | | $V_{Ain}$ | 0 | | 3 | V |
| Analogue Input impedance | | $Z_{in}$ | | 200 | | kΩ |
| **Body** | | | | | | |
| Outline Dimensions | | | | 25 × 25 × 6.5 | | mm³ |
| Weight | | | | 6.5 | | g |
| Connector | | | | 8 pin 2.54 mm | | |
| **ESD rating** | | | | | | |
| Electrostatic discharge | Human body model class 1C | $V_{ESD}$ | | | 2000 | V |

# TABLE OF CONTENTS


Product Information . . . 1
- Features . . . 1
- Applications . . . 1
- Description . . . 1
- Block Diagram . . . 1

Characteristics . . . 2

Antenna Diagram Characteristics . . . 5

Pin Configuration and Functions . . . 5

Theory of Operation . . . 6
- Overview . . . 6
- Sampling and FFT calculation . . . 7
- Start up time . . . 9
- Threshold generation . . . 9
- Detection algorithm . . . 10
- Reaction Time . . . 10

Application Information . . . 11
- Stand-alone Operation . . . 11
- Speed measurement . . . 11
- Host driven Operation . . . 11
- Speed limitation and ranging . . . 12
- Micro detection . . . 12
- FFT filter . . . 13
- Adjust hold time and sensitivity . . . 14
- Serial Interface . . . 14

Command Set Description . . . 15
- Command Classes . . . 15
- Command Format . . . 15
- Error messages . . . 15
- Command List . . . 16

# TABLE OF CONTENTS

Integrators Information . . . . . 21
Installation Instruction . . . . . 21
United States (FCC) and Canada (ISED) . . . . . 22
Europe (CE-RED) . . . . . 23
Outline Dimensions . . . . . 24
Order Information . . . . . 24
Revision History . . . . . 25

# ANTENNA DIAGRAM CHARACTERISTICS

This diagram shows module sensitivity (output voltage) in both azimuth and elevation directions. It incorporates the transmitter and receiver antenna characteristics.

**Figure 2: Antenna characteristics**

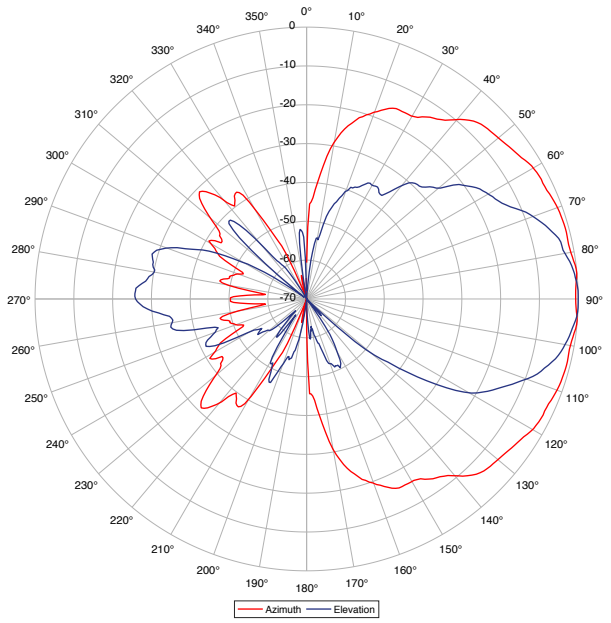


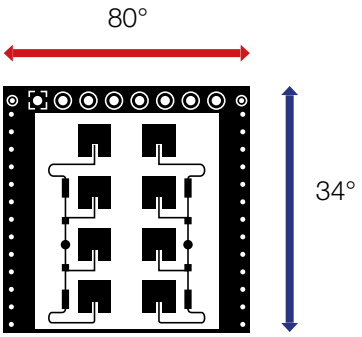


# PIN CONFIGURATION AND FUNCTIONS

**Table 1: Pin function description**

| Pin No. | Name | Description |
|---|---|---|
| 1 | GND | Ground pin |
| 2 | Detect Out | Digital detection output.<br>Signals a valid detection.<br>Low → no detection<br>High → valid detection |
| 3 | VCC | Power supply pin (3.2 to 5.5V) |
| 4 | RX | Serial interface RX input |
| 5 | TX | Serial interface TX output |
| 6 | Hold Time In | Analogue hold time input. Range from 0 to 3V<br>0V → minimum hold time<br>3V → maximum hold time |
| 7 | Sensitivity In | Analogue sensitivity input.<br>Range from 0 to 3V<br>0 V → minimum sensitivity<br>3V → maximum sensitivity |
| 8 | Misc. Out | Digital miscellaneous output. The function is programmable over the command set with the parameter S06.<br>In the factory setting this output signals the direction of a valid detection.<br>Low → backward/receding movement<br>High → forward/approaching movement<br>⚠ This output is only valid together with a high on pin 2 (valid detection) except if it is configured as micro detection output. |

**Figure 3: Pin configuration**

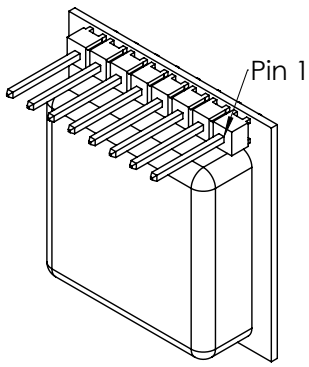

# THEORY OF OPERATION

## Overview

The K-LD2 takes advantage of an internal I/Q doppler signal processing by using a complex FFT (Fast Fourier Transform). The main advantages of this processing compared to standard time domain processing solutions are the following:

- Easy detection of the direction of a movement
- Increased detection range with better SNR due to the FFT processing
- Efficient interference suppression
- Vibration suppression

The signal processing unit samples the analogue I/Q doppler signals of the RF frontend and calculates a complex FFT in real time. In a next step an adaptive noise measurement and interference suppression is done which generates a threshold limit that can be adjusted with the sensitivity setting. Then the detection algorithm looks for a valid detection and latches it to the detection register and the digital outputs for the length of the hold time setting.

**Figure 4: Signal processing and detection workflow**

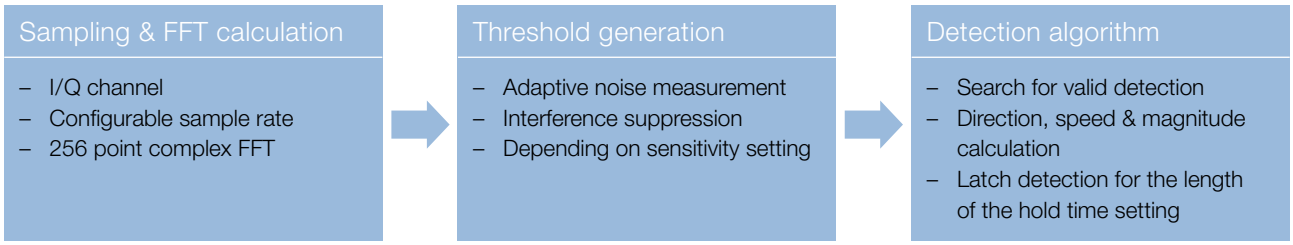


With a powerful command set (See chapter Command Set Description) it is possible to configure the whole signal processing and detection workflow. This allows customisation of the K-LD2 to get the best results in different environments and applications.

# Sampling and FFT calculation

The K-LD2 works with an internal I/Q doppler signal sampling and a computation of a 256 point wide complex FFT. I/Q doppler signals are phase shifted by +90° or -90° depending on the direction of a movement in the front of the sensor.

The signal processing unit samples the I/Q data with a configurable sampling rate (see parameter S04) and computes a complex FFT. The sampling rate is an important parameter of the sensor because it directly estimates the speed resolution, the maximal speed, and the response time of the system. The response time is doubled if the FFT average feature (described below) is used.

**Figure 5: I/Q doppler signals of an approaching movement (left) and a receding movement (right)**

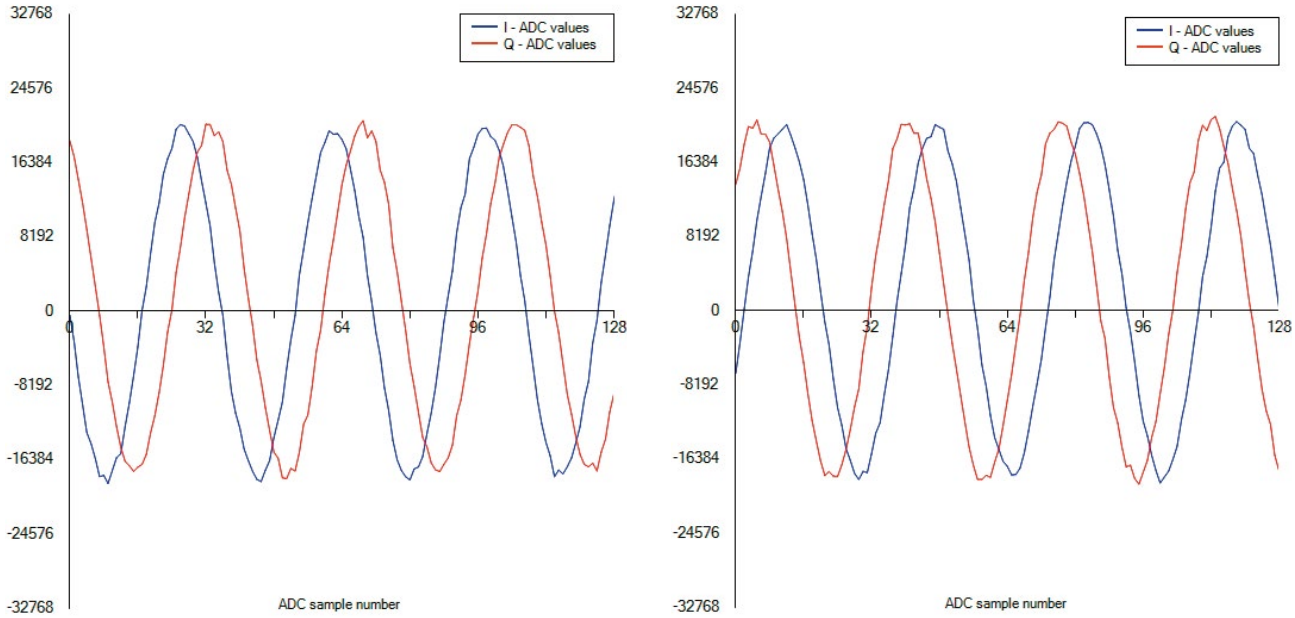


**Table 2: Sampling rate vs. speed resolution vs. maximal speed vs. response time**

| Parameter S04 | Sample rate [Hz] | Resolution [Hz] | Max. frequency [Hz] | Resolution [km/h] | Max speed [km/h] | Response time [ms] |
|---|---|---|---|---|---|---|
| 01 | 1280 | 5 | 640 | 0.11 | 14.3 | 200/400 |
| 02 | 2560 | 10 | 1280 | 0.22 | 28.6 | 100/200 |
| 03 | 3840 | 15 | 1920 | 0.34 | 43.0 | 67/134 |
| 04 | 5120 | 20 | 2560 | 0.45 | 57.3 | 50/100 |
| 05 | 6400 | 25 | 3200 | 0.56 | 71.6 | 40/80 |
| 06 | 7680 | 30 | 3840 | 0.67 | 85.9 | 33/66 |
| 07 | 8960 | 35 | 4480 | 0.78 | 100.2 | 29/58 |
| 08 | 10240 | 40 | 5120 | 0.89 | 114.5 | 25/50 |
| 09 | 11520 | 45 | 5760 | 1.01 | 128.9 | 22/44 |
| 0A | 12800 | 50 | 6400 | 1.12 | 143.2 | 20/40 |

The sampled I/Q doppler signals are transformed with a complex FFT into the frequency domain with 256 bins. Those signals appear either in the real (right) plane for an approaching movement or in the imaginary (left) plane for a receding movement. The signal in the centre is the DC offset caused by the amplifier and the analogue to digital conversion.

To reduce random noise, the sensor features a FFT average option (see parameter S0A) which is enabled in the factory settings. It is an average over two FFT frames.

## Figure 6: Doppler signals in the frequency domain, approaching

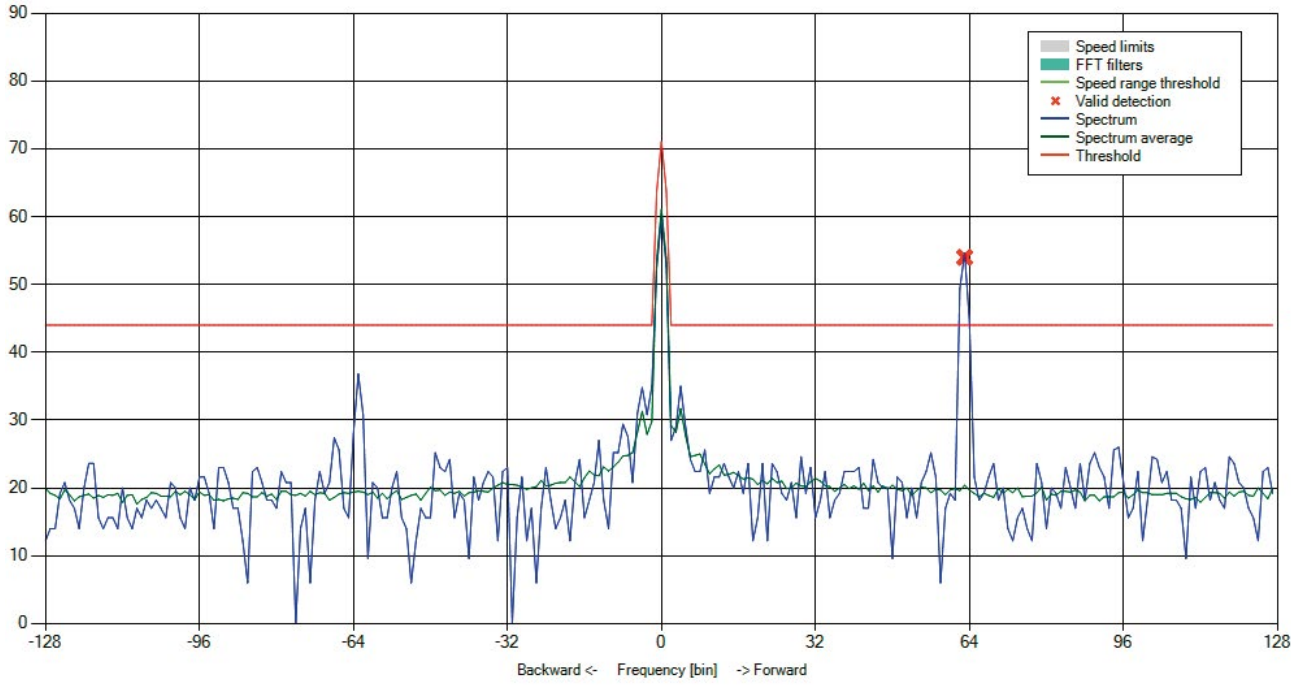


## Figure 7: Doppler signals in the frequency domain, receding

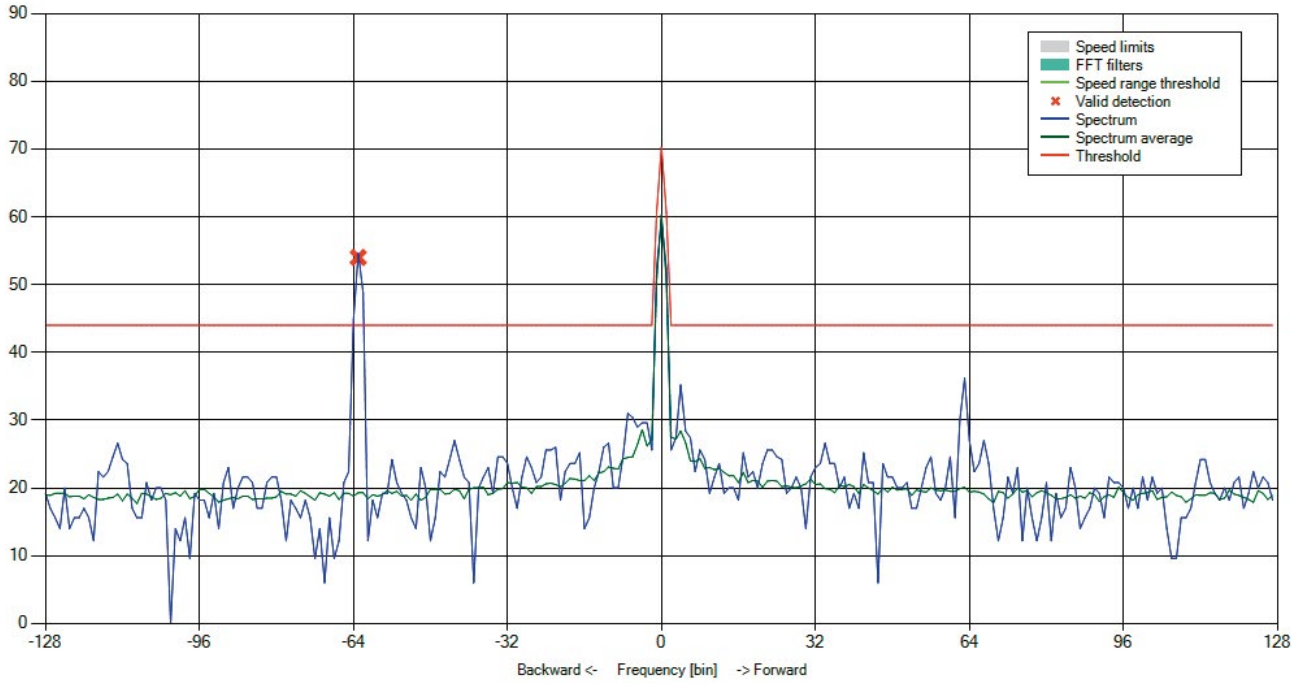

## Start up time

During start up, the sensor calculates the mean over the number of FFT frames specified with the parameter start up learn. The start up time of the sensor depends on this parameter, the sampling frequency and the FFT size.

$$t_{Startup} = \frac{N_{FFT} \cdot N_{Value\ of\ S05}}{f_{Sample}} = \frac{256 \cdot N_{Value\ of\ S05}}{f_{Sample}}$$

## Threshold generation

The calculated mean during start up represents the noise floor of the sensor and is stored as spectrum average. During operation the spectrum average is adapted continuously. The speed of this adaption is configurable using the parameter threshold noise adaption speed. This mechanism automatically adapts interferences that are present in both planes of the FFT.

This adaptive spectrum average is used together with the parameter minimum threshold margin to generate the minimum possible threshold level. This means that the threshold level for each bin cannot be smaller than the spectrum average + the minimum threshold margin setting and this is independent of the sensitivity setting. Adapted interferences are thus automatically filtered out in the threshold level and do not generate a detection.

The noise floor of different sensors can vary. The sensitivity setting is referenced to the ground line in order to get an as constant as possible movement detection over different sensors.

The threshold level is defined as an addition of the parameter minimum threshold offset and the set sensitivity setting for each bin (Further information about the adjustment of the sensitivity setting can be found in chapter Adjust Hold Time and Sensitivity).

**Figure 8: Minimum threshold level and interference adaption**

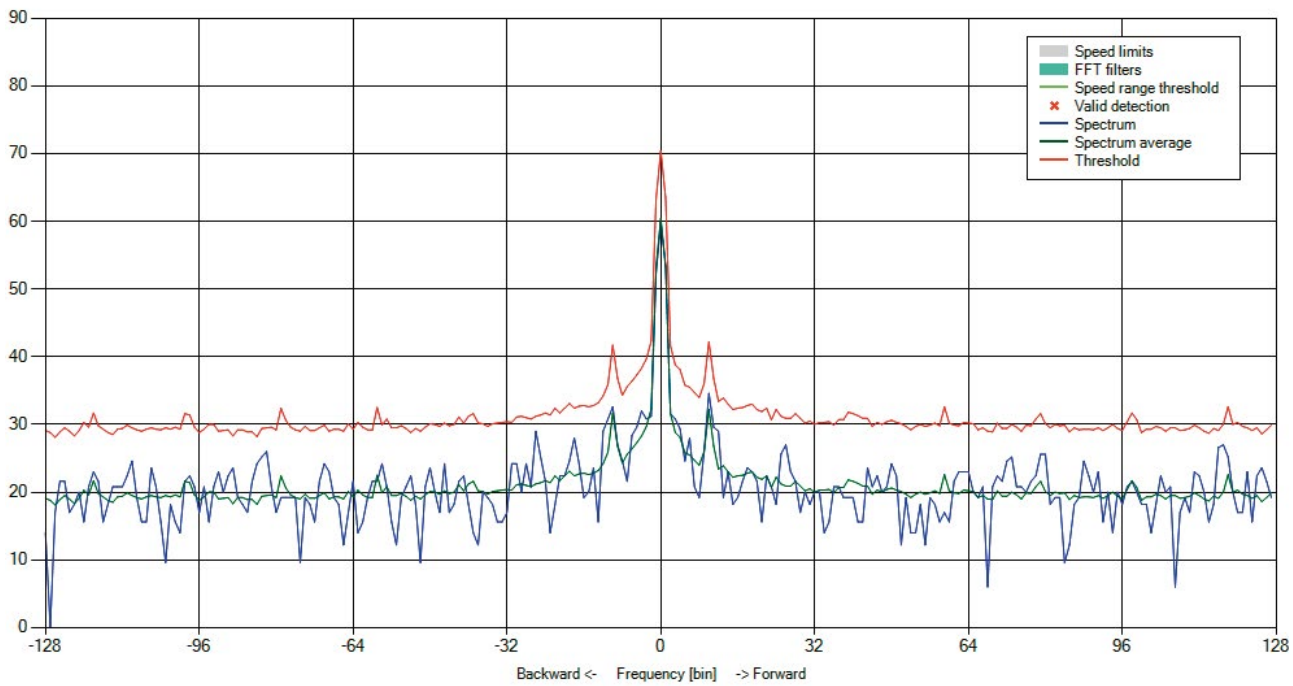


If the addition of the minimum threshold offset and the set sensitivity setting is smaller than the minimum threshold level (defined over the spectrum average and the parameter minimum threshold margin), the threshold is set to its minimum level.

## Detection algorithm

The detection algorithm uses the following steps:

1. Scan the FFT spectrum for peaks with a magnitude higher than the set threshold level and with the direction to detect set with the parameter D03.
2. Check if the peak is a valid movement with the correct direction or if it is an interference.
3. Increase the immunity against interferences by checking if the movement is constant (see parameter Immunity D02).
4. If there is a valid detection, estimate the speed bin and magnitude.
5. Latch all the information to the detection register (see parameters R00, R01 & R02) and to the digital outputs.
6. Decrease the hold time if there is no valid detection.
7. Reset the hold time if there is another valid detection.
8. Reset the detection register and the digital outputs if the hold time has elapsed.

You can find more advanced configuration options for the detection algorithm in the chapters Speed limitation and ranging, FFT filter and Adjust hold time and sensitivity.

## Reaction Time

The reaction time of the sensor depends on different settings and can be calculated with the equation below when the FFT average feature is disabled.

$$t_{Reaction} = \frac{N_{FFT}}{f_{Sample}} \cdot (Immunity + 1) = \frac{256}{f_{Sample}} \cdot (Immunity + 1)$$

With the FFT average feature enabled (see parameter S0A) the equation changes to:

$$t_{Reaction} = \frac{N_{FFT}}{f_{Sample}} \cdot (Immunity + 1) \cdot 2 = \frac{256}{f_{Sample}} \cdot (Immunity + 1) \cdot 2$$

# APPLICATION INFORMATION

## Stand-alone Operation

With the factory settings the sensor starts up and scans the beam for potential movements with a sampling rate of 2560Hz (app. 0.3 to 29.1 km/h). It filters out interferences and looks for movements with a magnitude that is higher than the threshold level set with the sensitivity.

If there is a valid movement the detection output (Pin 2) goes high and the direction is latched to the miscellaneous output (Pin 8) for the length of the set hold time.

The hold time (Pin 6) and the sensitivity (Pin 7) can be set using analogue inputs (for example with external potentiometers) in the following ranges:

- Hold time from 0.2 to 160s
- Sensitivity from 0 to 34dB (app. 2 to 20 m for walking humans)

With the factory settings the reaction time of the sensor is approximately 800ms.

The K-LD2 can also be factory configured with your settings. Contact RFbeam for more information.

## Host driven Operation

With a connection of the serial interface to a host (for example MCU or PC) it is possible to read-out advanced detection data including speed and magnitude of a valid detection or to use some advanced features of the K-LD2 which are described in the next chapters.

The detection output can be used to trigger a serial read-out command over an interrupt. If there is no interrupt input, it is possible to poll the detection state register and then trigger the additional read-out commands.

**Figure 9: MCU or PC connection example**

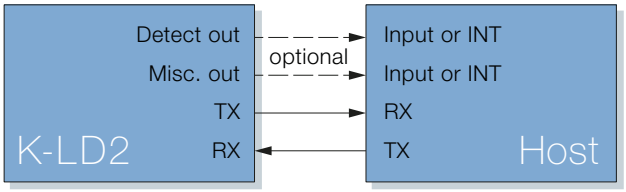


The command set features different parameters to read-out additional detection data.

**Table 3: Useful commands to read-out advanced detection data**

| Parameter | Description | Note |
|---|---|---|
| R00 | Get detection state register | Includes detection, direction, speed range and micro detection information |
| R01 | Get detection speed in bin | Only valid when the detection bit in the detection state register is high. |
| R02 | Get detection magnitude in dB | Only valid when the detection bit in the detection state register is high. |
| C00 | Get detection string | Complete set of data of the parameters R00 to R02 |

## Speed measurement

The speed of a detected object is returned in bin and can be easily converted into the doppler frequency with the sampling rate and the FFT width. The sample rate is adjustable over the command S04 and the FFT width is fixed to 256.

$$f_{Doppler} = bin \cdot \frac{f_{Sample}}{N_{FFT}} = bin \cdot \frac{f_{Sample}}{256}$$

The measured doppler frequency is proportional to the speed of the object when it is measured frontal to the sensor. An angle between the object and the sensor reduces the doppler frequency. The speed in km/h is easily computable with the equation below based on the doppler effect.

**Figure 10: FFT bin to speed conversion**

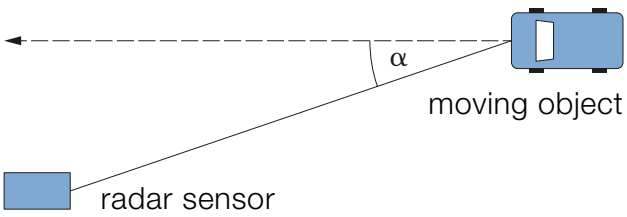


$$v = \frac{f_{Doppler} \cdot km/h}{44.7\,Hz \cdot cos(\alpha)} = \frac{bin \cdot f_{Sample} \cdot km/h}{256 \cdot 44.7\,Hz \cdot cos(\alpha)}$$

## Speed limitation and ranging

The K-LD2 features the possibility to easily filter out slow and fast speeds by setting speed limits with the parameters D04 & D05 over the command set. The limits are independent of each other and can be used stand-alone.

The whole FFT can also be divided into two speed ranges with the parameter D06. When the speed range threshold is set, the detection algorithm decides in which speed range (high or low) the detection was found and latches it to the detection register or, if it is configured to signal the speed range (see parameter S06), to the miscellaneous output.

The usage of the speed limits and the speed range threshold makes it very easy to divide objects into two speed classes

**Figure 11: Speed limitation and ranging overview**

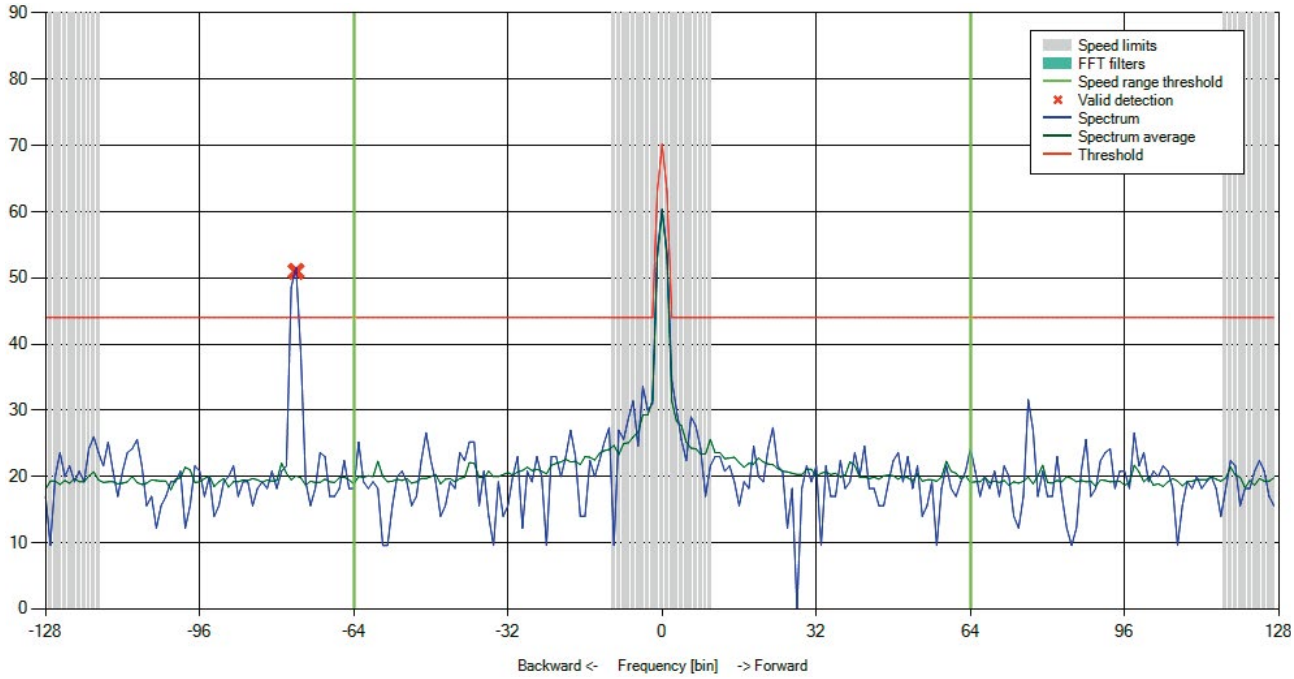


## Micro detection

The micro detection is a feature to detect very slow speeds in short range applications. It takes advantage of an algorithm that analyses the DC bin of the FFT to detect very slow speeds. The micro detection is independent from the normal detection algorithm and always enabled.

If a slow movement generates a signal magnitude that is higher than the adjustable micro detection threshold (see parameter D07) the micro detection flag in the detection register goes to high (see parameter R00).

The algorithm computes the micro detection flag for every sampled frame, independent of the hold time setting.

The miscellaneous output can be configured to signal the micro detection over the parameter S06. This gives the host the possibility to directly trigger to a valid micro detection.

Furthermore, it is possible to retrigger the detection algorithm over the micro detection feature (see parameter S0D). If this feature is enabled, the detection algorithm first requires a valid detection and then, if there was a valid micro detection, it will retrigger the hold time. If the hold time has elapsed because there was no detection or micro detection, the detection goes to low and needs again a valid detection before the micro detection is used to retrigger the hold time.

The covered speed range that is analysed by the micro detection feature depends on the sampling rate (see parameter S04), because the content of the DC bin changes with the sampling rate.

# FFT filter

The FFT filter feature can be used to filter out specific regions in the FFT spectrum. The FFT filter array (see parameters A20…A27) consists of up to 8 independent FFT filters. Further the ± width around these FFT filters can be specified with the parameter D08.

For example: The commands `$A20000A<CR>`, `$A210032<CR>` & `$A220050<CR>` define 3 FFT filters at the bin positions 10, 50 & 80. The command `$D0802<CR>` sets the ± width around the filters to 2.

This feature allows easy filtering out of unwanted constant movements like a ventilator. Please note that other movements with the same speed are also filtered out.

**Figure 12: FFT filter and FFT filter width example**

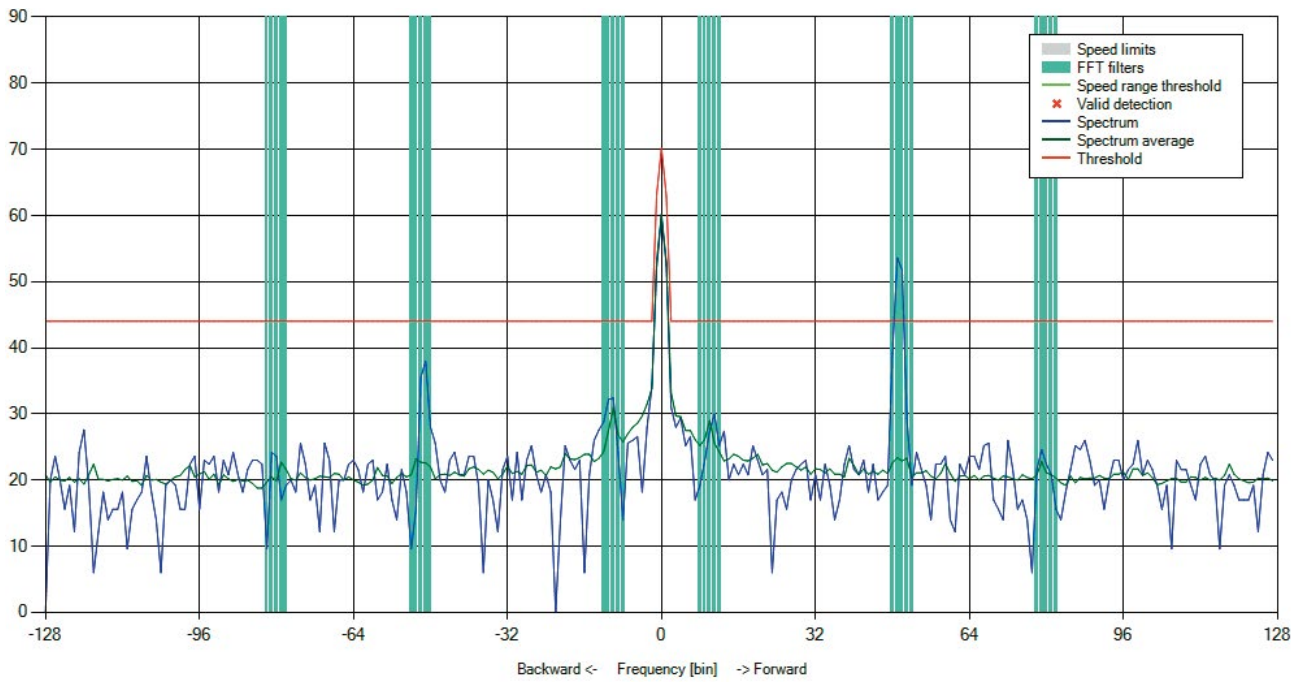

## Adjust hold time and sensitivity

The K-LD2 uses arrays with a width of 10 elements to set the range of hold time and sensitivity (see parameters A00…A09 for hold time and parameters A10…A19 for sensitivity). The used index of the arrays is defined using the parameters D00 and D01 or by the analogue inputs, if these are enabled with the parameters S0B and S0C.

In the factory settings these arrays are filled with default values that will work for the most applications. (See Table Hold time array default values and Table Sensitivity array default values) It is possible to overwrite these arrays to generate your own sensitivity or hold time curves.

**Figure 13: Hold time and sensitivity block diagram**

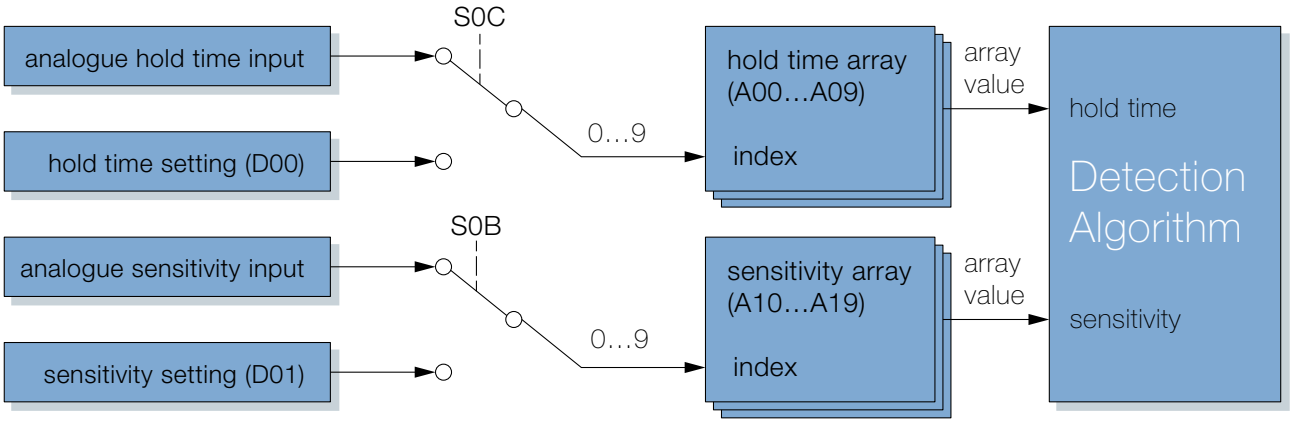


## Serial Interface

The K-LD2 features a serial interface with a command set to configure the sensor and read-out measured data. The interface is an ASCII based 3.3V asynchronous UART with the following settings:

- Baud rate 38400 bps
- 8 data bits
- 1 stop bit
- no parity, no handshake

This interface and the complete command set is supported by the K-LD2 Control Panel, which is included in the K-LD2-EVAL evaluation kit.

It is possible to connect the K-LD2 directly with an USB to UART cable with +3.3V TTL level signals. For example the TTL-232R-3V3 from FTDI can directly be connected to the pins 1 to 6 of the K-LD2 to power it and get access to the serial interface over a standard terminal program.

# COMMAND SET DESCRIPTION

## Command Classes

The command set is divided into different classes. Every class contains a set of parameters.

**Table 4: Command classes**

| Parameter Type | Cmd Class | Volatile | Purpose |
|---|---|---|---|
| System parameters | S | Yes | System relevant parameters to configure the sampling and interference suppression |
| Detection parameters | D | Yes | Specific parameters to configure the detection algorithm |
| Array parameters | A | Yes | System specific tables |
| Flash read parameters | F | Yes | Read only parameters |
| Real-time read parameters | R | No | Real-time system and detection information |
| Basic write parameters | W | No | Basic write parameters to configure the system |
| Complex read parameters | C | No | Advanced read-out parameters |
| Testing parameters | T | No | Parameters to test the hardware |

## Command Format

Every command is ASCII coded and needs to be sent over the serial interface by a host CPU or an ASCII terminal program. Every request needs to start with the prefix `$` and ends with a `<CR>` (`0x0D` in Hex). The K-LD2 always answers with @ as a prefix excluding the command class C.

**Table 5: Command format**

| $ | P | NN | VV[VV] | <CR> |
|---|---|---|---|---|
| Prefix | Command class | Parameter number (Hex) | Value (Hex) 8 or 16Bit wide | «Enter» |

**Table 6: request/response example**

| Example request | K-LD2 response | Comment |
|---|---|---|
| $S06<CR><br>$S0602<CR> | @S0601<CR><LF><br>@S0602<CR><LF> | Get actual value<br>Set new value |

## Error messages

The K-LD2 responds with a message from the table below if an error has occurred.

**Table 7: Error messages**

| Error message | Description |
|---|---|
| @E01<CR><LF> | Value out of limits |
| @E02<CR><LF> | Parameter number does not exist |
| @E03<CR><LF> | Command class does not exist |
| @E04<CR><LF> | Writing to EEPROM error |
| @E05<CR><LF> | Command format error |
| @E06<CR><LF> | UART communication error |

All values are in hexadecimal notation unless otherwise noted.

### Table 8: Class S 8-Bit system parameters

| Param. | Default | Min | Max | Name | Description |
|---|---|---|---|---|---|
| S04 | 02 | 01 | 0A | Sampling rate | Sampling rate = value*1280Hz<br>Only valid after reset. |
| S05 | 10 | 01 | 40 | Start up learn | Number of FFT blocks that are used to learn the noise threshold average at start up.<br>01: no average at start up, fastest start up time<br>40: best average at start up, slowest start up time<br>Only valid after reset. |
| S06 | 01 | 00 | 03 | Function of miscellaneous output | Configurable functions of the miscellaneous output pin. The functions directly represent the detection register.<br>Detailed information about the functions can be found in the command description of the parameter R00. |
| S07 | 1E | 14 | 50 | Minimum threshold offset | Defines the minimum threshold offset in dB with the ground line as reference. |
| S08 | 0A | 01 | 30 | Minimum threshold margin | Defines the minimum margin between the noise average and the threshold curve. |
| S09 | 0A | 00 | FF | Threshold noise adaption speed | The speed of the noise average threshold adaption can be set with this parameter. The value defines after how many FFT blocks the noise threshold average is adapted again. |
| S0A | 01 | 00 | 01 | Use FFT average | FFT averaging flag to reduce random noise.<br>00: averaging off<br>01: averaging on<br>Doubles the response and reaction time if enabled. |
| S0B | 01 | 00 | 01 | Use sensitivity potentiometer | Flag to enable the usage of the analogue input for the sensitivity.<br>00: use digital sensitivity setting of parameter D01<br>01: use potentiometer input for sensitivity setting |
| S0C | 01 | 00 | 01 | Use hold time potentiometer | Flag to enable the usage of the analogue input for the hold time.<br>00: use digital hold time setting of parameter D00<br>01: use potentiometer input for hold time setting |
| S0D | 00 | 00 | 01 | Use micro detection for retriggering | Flag to enable the usage of the micro detection to retrigger the detection algorithm.<br>00: micro detection retriggering disabled<br>01: micro detection retriggering enabled |

| Value | Function | Logic Low | Logic High |
|---|---|---|---|
| 00 | Detection | No detection | Valid detection |
| 01 | Direction | Backward/receding | Forward/approaching |
| 02 | Range | Low speed range | High speed range |
| 03 | Micro detection | No detection | Valid micro detection |

## Table 9: Class D 8-Bit detection parameters

| Param. | Default | Min | Max | Name | Description |
|---|---|---|---|---|---|
| D00 | 01 | 00 | 09 | Hold time | Index value to select an element of the hold time array defined with the parameters A00…A09.<br>This value has no effect if the parameter use hold time potentiometer S0C is enabled. |
| D01 | 07 | 00 | 09 | Sensitivity | Index value to select an element of the sensitivity array defined with the parameters A10…A19.<br>This value has no effect if the parameter use sensitivity potentiometer S0D is enabled. |
| D02 | 03 | 00 | 10 | Immunity | Value to change the immunity against interferences like vibrations.<br>00: minimum immunity<br>10: maximum immunity<br>Immunity increases the reaction time of the sensor. |
| D03 | 02 | 00 | 02 | Direction to detect | Defines which direction is detected in the detection algorithm.<br>00: only forward (approaching)<br>01: only backward (receding)<br>02: both directions |
| D04 | 00 | 00 | 7F | Low speed limit | Can be used to define a low speed limit in bin for the detection algorithm to filter out slow speeds.<br>00: inactive<br>01…7F: All speeds below this bin are filtered out |
| D05 | 00 | 00 | 7F | High speed limit | Can be used to define a high speed limit in bin for the detection algorithm to filter out fast speeds.<br>00: inactive<br>01…7F: All speeds above this bin are filtered out |
| D06 | 00 | 00 | 7F | Speed range threshold | Function to divide the spectrum in a high and a low speed range. Triggers the range flag in the detection register R00.<br>00: inactive<br>01…7F: threshold in bin for the low and high speed range |
| D07 | 06 | 05 | 09 | Micro detection threshold | Function to set the threshold of the micro detection feature.<br>05: minimum threshold<br>09: maximum threshold |
| D08 | 02 | 00 | 0A | FFT filter width | Defines the ± width in bin that is filtered out around a specified filter in the FFT filter array defined with the parameters A20…A27. |

## Table 10: Class A 16-Bit array parameters

| Param. | Default | Min | Max | Name | Description |
|---|---|---|---|---|---|
| A00…<br>A09 | See table below | 0000 | FFFF | Hold time array | 10 elements wide hold time array in 100 ms, addressed by parameter D00.<br>0000: minimum hold time<br>0002: 2*100 ms → 0.2 s hold time<br>FFFF: maximum hold time |
| A10…<br>A19 | See table below | 0000 | 00FF | Sensitivity array | 10 elements wide sensitivity array in dB, addressed by parameter D01.<br>0000: maximum sensitivity<br>000A: 10 dB sensitivity<br>00FF: minimum sensitivity |
| A20…<br>A27 | 0 | 0000 | 007F | FFT filter array | FFT filter array in bin to define up to 8 different FFT filters with a ± width defined by parameter D08.<br>0000: FFT filter inactive<br>0001…007F: FFT filter position in bin |

## Table 11: Hold time array default values

| Param. | A00 | A01 | A02 | A03 | A04 | A05 | A06 | A07 | A08 | A08 |
|---|---|---|---|---|---|---|---|---|---|---|
| Value [Hex] | 0002 | 0005 | 000A | 0014 | 0032 | 0064 | 00C8 | 0190 | 0320 | 0640 |
| Value [s] | 0.2 | 0.5 | 1 | 2 | 5 | 10 | 20 | 40 | 80 | 160 |

## Table 12: Sensitivity array default values

| Param. | A10 | A11 | A12 | A13 | A14 | A15 | A16 | A17 | A18 | A19 |
|---|---|---|---|---|---|---|---|---|---|---|
| Value [Hex] | 0022 | 001C | 0016 | 0012 | 000E | 000A | 0006 | 0004 | 0002 | 0000 |
| Value [dB] | 34 | 28 | 22 | 18 | 14 | 10 | 6 | 4 | 2 | 0 |

## Table 13: Class F 16-Bit flash read parameters

| Param. | Default | Min | Max | Name | Description |
|---|---|---|---|---|---|
| F00 | – | 0000 | FFFF | Get software version | Returns the firmware version of the sensor as a 16-Bit hex value.<br>For example: `@F000078<CR><LF>` → 120 → Version 01.20 |
| F01 | – | 0000 | FFFF | Get type of device | Returns the type of the device, that the firmware is running on.<br>0001: K-LD2 |

## Table 14: Class R 8-Bit real-time read parameters

| Param. | Default | Min | Max | Name | Description |
|---|---|---|---|---|---|
| R00 | – | 00 | 0F | Get detection register | Returns the detection register with the content below.<br>**Bit** / **Name** / **Description**<br>0 / Det / Signals a valid detection.<br>0: no detection<br>1: valid detection<br>1 / Dir / Signals the direction of the detection.<br>0: backward/receding movement detected<br>1: forward/approaching movement detected<br>⚠ Only valid if Bit 0 is high.<br>2 / Range / Signals the speed range of the detection depending on the speed threshold parameter D06.<br>0: low speed range detected<br>1: high speed range detected<br>⚠ Only valid if the speed range threshold is > 0 and if Bit 0 is high.<br>3 / Micro / Signals a micro detection found in the DC bin of the FFT.<br>0: no micro detection<br>1: valid micro detection |
| R01 | – | 00 | FF | Get detection speed | Returns the speed in bin of the last valid detection.<br>⚠ Only valid if the bit 0 in the detection register R00 is high. |
| R02 | – | 00 | FF | Get detection magnitude | Returns the magnitude in dB of the last valid detection.<br>⚠ Only valid if the bit 0 in the detection register R00 is high. |
| R03 | – | 00 | FF | Get noise level | Returns the mean noise level value in dB. |
| R04 | – | 00 | 02 | Get operation state | Returns the operation state of the sensor. Can be used at start up to check if the sensor is ready.<br>00: start up<br>01: learn<br>02: run |
| R05 | – | 00 | 09 | Get hold time potentiometer index | Returns the current hold time potentiometer index.<br>00: 0V at the analogue input<br>09: 3V at the analogue input |
| R06 | – | 00 | 09 | Get sensitivity potentiometer index | Returns the current sensitivity potentiometer index.<br>00: 0V at the analogue input<br>09: 3V at the analogue input |

## Table 15: Class W 8-Bit basic write parameters

| Param. | Default | Min | Max | Name | Description |
|---|---|---|---|---|---|
| W00 | – | – | – | Reset processor | Generates a software reset.<br>Check the operation state after the reset with the parameter R04. |
| W01 | – | – | – | Restore factory settings | Restores the default factory settings for all parameters.<br>Check the operation state after the restore with the parameter R04. |
| W02 | 00 | 00 | 01 | Set UART baud rate | Sets the baud rate of the serial UART interface.<br>00: 38400 bps<br>01: 460800 bps<br>This parameter is not stored. After a reset or restart the baud rate is set to 38400 bps. |

## Table 16: Class C variable length complex read parameters

| Param. | Default | Min | Max | Name | Description | Length |
|---|---|---|---|---|---|---|
| C00 | – | – | – | Get detection string | Returns the detection register, the detection speed and the detection magnitude as an ASCII string in decimal format.<br>Example response: `001;076;067;` | 14 bytes |
| C01 | – | – | – | Get target string | Returns an ASCII target list string in decimal format. It returns the speed and magnitude of the dominant movement for the forward and backward plane of the spectrum.<br>Target string structure:<br>Forward speed in bin +<br>Backward speed in bin +<br>Forward magnitude in dB +<br>Backward magnitude in dB<br>Example response:<br>`000;000;000;000;` → no target found<br>`076;000;045;000;` → forward target found<br>`000;076;000;045;` → backward target found<br>`020;076;031;045;` → two targets found | 18 bytes |
| C02 | – | – | – | Get EEPROM hex string | Returns the full 512 EEPROM bytes as an ASCII string in the Intel hex format. | 2893 bytes |
| C03 | – | – | – | Get FFT spectrum + threshold level | Returns the FFT spectrum and the threshold level in a binary format.<br>**Description / Datatype / Length**<br>FFT spectrum / UINT16* / 512 bytes<br>Threshold level / UINT16* / 512 bytes | 1024 bytes |
| C04 | – | – | – | Get ADC I/Q data + FFT spectrum + threshold level | Returns the ADC I/Q data, the FFT spectrum and the threshold level in a binary format.<br>**Description / Datatype / Length**<br>ADC I data / INT16* / 512 bytes<br>ADC Q data / INT16* / 512 bytes<br>FFT spectrum / UINT16* / 512 bytes<br>Threshold level / UINT16* / 512 bytes | 2048 bytes |
| C05 | – | – | – | Get C04 + additional parameters | Returns the values of C04 and additional parameters in a binary format.<br>**Description / Datatype / Length**<br>ADC I data / INT16* / 512 bytes<br>ADC Q data / INT16* / 512 bytes<br>FFT spectrum / UINT16* / 512 bytes<br>Threshold level / UINT16* / 512 bytes<br>Detection register / UINT8 / 1 byte<br>Detection speed / UINT8 / 1 byte<br>Detection magnitude / UINT8 / 1 byte<br>Target string / ASCII string / 15 bytes<br>Noise level mean / UINT8 / 1 byte<br>Operation state / UINT8 / 1 byte<br>Index of hold time potentiometer / UINT8 / 1 byte<br>Index of sensitivity potentiometer / UINT8 / 1 byte | 2070 bytes |
| C06 | – | – | – | Get C05 + spectrum average | Returns the values of C05 and the spectrum average in a binary format.<br>**Description / Datatype / Length**<br>ADC I data / INT16* / 512 bytes<br>ADC Q data / INT16* / 512 bytes<br>FFT spectrum / UINT16* / 512 bytes<br>Threshold level / UINT16* / 512 bytes<br>Detection register / UINT8 / 1 byte<br>Detection speed / UINT8 / 1 byte<br>Detection magnitude / UINT8 / 1 byte<br>Target string / ASCII string / 15 bytes<br>Noise level mean / UINT8 / 1 byte<br>Operation state / UINT8 / 1 byte<br>Index of hold time potentiometer / UINT8 / 1 byte<br>Index of sensitivity potentiometer / UINT8 / 1 byte<br>Spectrum average / UINT16* / 512 bytes | 2582 bytes |

*16 bit wide datatypes are sent with the high byte first.

## Table 17: Class T 8-Bit testing parameters

| Param. | Default | Min | Max | Name | Description |
|---|---|---|---|---|---|
| T00 | 00 | 00 | 01 | Activate testing mode | Activates the testing mode.<br>00: Testing mode disabled<br>01: Testing mode enabled<br>This parameter is not stored. After a reset or restart it is reset to the value 00. |
| T01 | – | 00 | 01 | Force detection output | Controls the detection output, if the testing mode T00 is enabled<br>00: force to low<br>01: force to high |
| T02 | – | 00 | 01 | Force miscellaneous output | Controls the miscellaneous output, if the testing mode T00 is enabled<br>00: force to low<br>01: force to high |

# INTEGRATORS INFORMATION

## Installation Instruction

### Mechanical enclosure

It is possible to hide the sensor behind a so called radome (short for radar dome) to protect it from environmental influences or to simply integrate it in the case of the end product. A radar sensor can see trough different types of plastic and glass of any colour as long as it is not metallized. This allows for a very flexible design of the housing as long as the rules below are observed.

- Cover must not be metallic.
- No plastic coating with colors containing metallic or carbon particles.
- Distance between cover and front of Radar sensor ≤ 6.2 mm
- Best cover material is Polycarbonat or ABS
- Best cover thickness is 3–4 mm
- Vibrations of the Radar antenna relatively to the cover should be avoided, because this generates signals that can trigger the output
- The cover material can act as a lens and focus or disperse the transmitted waves. Use a constant material thickness within the area used for transmission to minimize the effect of the radome to the radiated antenna pattern.

Detailed information about the calculation and thickness for different cover materials can be found in the application note “AN-03-Radome”.

# United States (FCC) and Canada (ISED)

This module has been granted modular approval for fixed and/or mobile applications. The modular approval allows the end user to integrate the module into a finished product without obtaining subsequent and separate FCC/ISED approvals for intentional radiation, provided no changes or modifications are made to the module circuitry. Changes or modifications could void the user's authority to operate the equipment. The end user must comply with all of the instructions provided by the Grantee, which indicate installation and/or operating conditions necessary for compliance. The finished product is required to comply with all applicable FCC/ISED equipment authorizations regulations, requirements and equipment functions not associated with the transmitter module portion.

Modification to this product will void the users' authority to operate this equipment.

The OEM integrator is responsible for the final compliance of the end product with this integrated modular approved transmitter module. This includes measurements with the RF module integrated and activated as defined in KDB 996369 and if applicable appropriate equipment authorizations as defined in §15.101.

## Labelling and user information requirements

If the label of the module is not visible from the outside of the end product, it must include the following texts on the label of the host product:

FCC Contains FCC ID: 2ASYV-K-LD2
ISED Contains IC: 24358-KLD2

In addition to marking the product with the appropriate ID's, the end product shall bear the following statement in a conspicuous location on the label or alternatively in the user manual:

This device complies with Part 15 of the FCC Rules and with Industry Canada licence-exempt RSS standard(s). Operation is subject to the following two conditions: (1) this device may not cause harmful interference, and (2) this device must accept any interference received, including interference that may cause undesired operation.

Le présent appareil est conforme aux CNR d'Industrie Canada applicables aux appareils radio exempts de licence. L'exploitation est autorisée aux deux conditions suivantes: (1) l'appareil ne doit pas produire de brouillage, et (2) l'appareil doit accepter tout brouillage radioélectrique subi, même si le brouillage est susceptible d'en compromettre le fonctionnement.

## RF Exposure

This module is approved for installation into fixed and/or mobile host platforms and must not be co-located or operating in conjunction with any other antenna or transmitter except in accordance with FCC/ISED multi-transmitter guidelines. End users must be provided with transmitter operating conditions for satisfying RF Exposure compliance.

# Europe (CE-RED)

This module is a Radio Equipment Directive assessed radio module that is CE complaint and have been manufactured and tested with the intention of being integrated into a final product.

According to the RED every final product that includes a radio module is also a radio product which falls under the scope of the RED. This means that OEM and host manufacturers are ultimately responsible for the compliance of the host and the module. The final product must be reassessed against all of the essential requirements of the RED before it can be placed on the EU market. This includes reassessing the module for compliance against the following RED articles:

- Article 3.1(a): Health and safety
- Article 3.1(b): Electromagnetic compatibility (EMC)
- Article 3.2: Efficient use of radio spectrum (RF)

The RED knows different conformity assessment procedures to show compliance against the essential requirements (See RED Guide, chapter 2.6b). As long as the radio module can show compliance to Article 3.2 by the use of a harmonized standard, which is listed in the official journal of the EU (OJEU), it is not necessary to do an EU type examination for the final radio product by a notified body. In this case it is possible to demonstrate conformity according to the essential requirements of the RED by using Module A (Annex II of the RED), which allows to show conformity by internal production control.

As long as a harmonized standard listed in the OJEU can be used to demonstrate conformity in accordance with Article 3.2 of the RED, it is possible to carry out the CE certification in self-declaration without the involvement of a notified body.

The K-LD2 shows compliance against the Article 3.2 by the use of the standard EN 300 440 which is a harmonized standard listed in the OJEU, what gives the possibility to show conformity by internal production control.

An OEM integrator can show compliance to article 3.1(a) and 3.1(b) for the final product by doing internal or external tests and following the Module A (Annex II of the RED) assessment procedure. To show compliance against article 3.2 it is possible to reuse the assessment of the K-LD2 as long as it is the only radio module in the final product or if the integrator can guarantee that only one radio module is operating at the same time. Test reports of the K-LD2 are available on request.

The ETSI guide EG 203 367 provides detailed guidance on the application of harmonized standards to multi-radio and combined equipment to demonstrate conformity.

## RF Exposure Information (MPE)

This device has been tested and meets applicable limits for Radio Frequency (RF) exposure. A detailed calculation to show compliance to the RED Article 3.1(a) is available on request.

## Simplified DoC Statement

Hereby, RFbeam Microwave GmbH declares that the radio equipment type K-LD2 is in compliance with Directive 2014/53/EU. The declaration of conformity may be consulted at www.rfbeam.ch.

# OUTLINE DIMENSIONS

**Figure 14: Outline dimensions in millimeter**

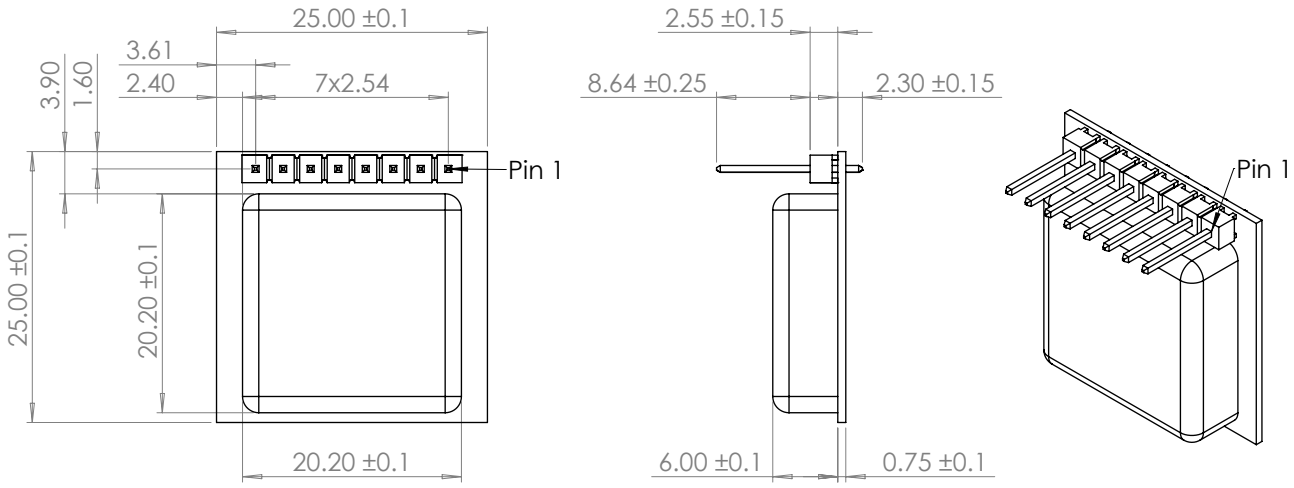


# ORDER INFORMATION

The ordering number consists of different parts with the structure below.

**Figure 15: Ordering number structure**

| Product | – | Customer | – | HW variant | Supply | – | SW variant |
|---|---|---|---|---|---|---|---|
| **= K-LD2** | | **= RFB** for standard products | | **= 00** for standard variant | **= H** for 3.3V…5V version | | **= 02** for standard variant |

**Table 18: Available ordering numbers**

| Ordering number | Description |
|---|---|
| K-LD2-RFB-00H-02 | Standard K-LD2 with default configuration, without PC software |
| K-LD2-EVAL-RFB-01H | Standard K-LD2 evaluation kit with powerful PC software |

It is possible to order K-LD2 sensors with a preprogramed custom configuration. Contact RFbeam Microwave for more information.

# REVISION HISTORY

06/2017 – Revision A: Initial Version

09/2018 – Revision B: Changes to Figure 2: Antenna characteristic
Changes to Figure 15: Ordering number structure
Changes to Table 18: Available ordering numbers
Added Table of Contents and changed the title format

02/2020 – Revision C: Changed Supply current to RMS and peak current
Added relative humidity to the operating conditions
Changed the frequency drift and typical output power
Added ESD level information
Added new chapter integrators information

RFbeam does not assume any responsibility for use of any circuitry described, no circuit patent licenses are implied and RFbeam reserves the right at any time without notice to change said circuitry and specifications.