TEST REPORT

Product Name	:	Thermostat
Model Number	:	GS368, GS368M
FCC ID	:	2ASYYGS368

Prepared for	:	Siterwell Electronics Co ., Limited
Address	:	No.666 Qingfeng Road, Jiangbei District, Ningbo, Zhejiang Province,China.
Prepared by	:	EMTEK (NINGBO) CO., LTD.
Address	:	No. 8, Building 8, Lane 216, Qingyi Road, Ningbo Hi-Tech Zone, Ningbo, Zhejiang, China Tel: +86-574-27907998 Fax: +86-574-27721538

Report Number	:	ENB2308310070W00401R
Date(s) of Tests	:	August 31, 2023 to September 15, 2023
Date of Issue	:	September 18, 2023

TABLE OF CONTENTS

1 TEST RESULT CERTIFICATION 3

2 EUT TECHNICAL DESCRIPTION 5

3 SUMMARY OF TEST RESULT 6

4 TEST METHODOLOGY 7

4.1 GENERAL DESCRIPTION OF APPLIED STANDARDS 7
4.2 MEASUREMENT EQUIPMENT USED 7
4.3 DESCRIPTION OF TEST MODES 9
4.4 TEST SOFTWARE 10

5 FACILITIES AND ACCREDITATIONS 11

5.1 FACILITIES 11
5.2 LABORATORY ACCREDITATIONS AND LISTINGS 11

6 TEST SYSTEM UNCERTAINTY 12

7 SETUP OF EQUIPMENT UNDER TEST 13

7.1 RADIO FREQUENCY TEST SETUP 1 13
7.2 RADIO FREQUENCY TEST SETUP 2 13
7.3 CONDUCTED EMISSION TEST SETUP 14
7.4 BLOCK DIAGRAM CONFIGURATION OF TEST SYSTEM 15
7.5 SUPPORT EQUIPMENT 15

8 TEST REQUIREMENTS 16

8.1 DTS (6DB) BANDWIDTH 16
8.2 MAXIMUM CONDUCTED(AVERAGE) OUTPUT POWER 17
8.3 MAXIMUM POWER SPECTRAL DENSITY 26
8.4 UNWANTED EMISSIONS IN NON-RESTRICTED FREQUENCY BANDS 27
8.5 RADIATED SPURIOUS EMISSION 28
8.6 CONDUCTED EMISSIONS TEST 44
8.7 ANTENNA APPLICATION 47

1 TEST RESULT CERTIFICATION

Applicant	:	Siterwell Electronics Co ., Limited
Address	:	No.666 Qingfeng Road, Jiangbei District, Ningbo, Zhejiang Province,China.
Manufacturer	:	Siterwell Electronics Co ., Limited
Address	:	No.666 Qingfeng Road, Jiangbei District, Ningbo, Zhejiang Province,China.
EUT	:	Thermostat
Model Name	:	GS368, GS368M
Trademark	:	SITERWELL

Measurement Procedure Used:

APPLICABLE STANDARDS	
STANDARD	**TEST RESULT**
FCC 47 CFR Part 2, Subpart J FCC 47 CFR Part 15, Subpart C	PASS

The above equipment was tested by EMTEK (NINGBO) CO., LTD. The test data, data evaluation, test procedures, and equipment configurations shown in this report were made in accordance with the procedures given in ANSI C63.10 (2013) and the energy emitted by the sample EUT tested as described in this report is in compliance with the requirements of FCC Rules Part 2 and Part 15.247

The test results of this report relate only to the tested sample identified in this report.

Date of Test : August 31, 2023 to September 15, 2023

Prepared by : June Gao /Engineer

Reviewer : Vinay /Supervisor

Approve & Authorized Signer : Tony wei/Manager

Modified History

Version	Report No.	Revision Date	Summary
/	ENB2308310070W00401R	/	See Note

Note: The product has updated the schematic design of the AC power supply part and the DC power supply part. There is no change in the wireless module part. Based on the original report ENB2306190316W00101R. To verify compliance with update requirements, we conducted tests on the Maximum Peak Conducted Output Power, Conducted Emission Test, Radiated Spurious Emission (30MHz-1GHz).

2 EUT TECHNICAL DESCRIPTION

Characteristics	Description
Product	Thermostat
Model Number	GS368, GS368M Note: The two models differ only in software OTA. PCB design, schematic diagram, etc. are the same, we choose GS368 for testing.
Sample Number	ENB2308310070W004-1-1
IEEE 802.11 WLAN Mode Supported	☒802.11b ☒802.11g ☒802.11n(20MHz channel bandwidth) ☒802.11n(40MHz channel bandwidth)
Data Rate	802.11 b:1,2,5.5,11Mbps; 802.11 g:6,9,12,18,24,36,48,54Mbps; 802.11 n: MCS0~7,up to 150Mbps;
Modulation	DSSS with DBPSK/DQPSK/CCK for 802.11b; OFDM with BPSK/ CCK /16QAM/64QAM for 802.11g/n;
Operating Frequency Range	☒2412-2462MHz for 802.11b/g/n(HT20); ☒2422-2462MHz for 802.11n(HT40)
Number of Channels	☒11 channels for 802.11b/g n(HT20); ☒9 Channels for 802.11n(HT40)
Transmit Power Max	16.73 dBm
Smart system	☒SISO for802.11 b/g/n ☐MIMO for802.11n
Antenna Type	PCB Antenna
Antenna Gain	3.37 dBi
Power supply	AC 24V/60Hz, DC 3V
Temperature Range	0℃~+50℃
Date of Received	August 31, 2023

Note: *for more details, please refer to the User's manual of the EUT.*

3 SUMMARY OF TEST RESULT

FCC Part Clause	Test Parameter	Verdict	Remark
15.247(a)(2)	DTS (6dB) Bandwidth	N/A	
15.247(b)(3)	Maximum Peak Conducted Output Power	PASS	
15.247(e)	Maximum Power Spectral Density Level	N/A	
15.247(d)	Unwanted Emission Into Non-Restricted Frequency Bands	N/A	
15.247(d) 15.209	Unwanted Emission Into Restricted Frequency Bands (conducted)	N/A	
15.247(d) 15.209	Radiated Spurious Emission	PASS	
15.207	Conducted Emission Test	PASS	
15.247(b)	Antenna Application	PASS	
	NOTE1:N/A (Not Applicable) NOTE2: According to FCC OET KDB 558074, the report use radiated measurements in the restricted frequency bands. In addition, the radiated test is also performed to ensure the emissions emanating from the device cabinet also comply with the applicable limits.		

RELATED SUBMITTAL(S) / GRANT(S):

This submittal(s) (test report) is intended for FCC ID: 2ASYYGS368 filing to comply with Section 15.247 of the FCC Part 15, Subpart C Rules.

4 TEST METHODOLOGY

4.1 GENERAL DESCRIPTION OF APPLIED STANDARDS

According to its specifications, the EUT must comply with the requirements of the following standards:
FCC 47 CFR Part 2, Subpart J
FCC 47 CFR Part 15, Subpart C
FCC KDB 558074 D01 15.247 Meas Guidance v05r02

4.2 MEASUREMENT EQUIPMENT USED

4.2.1 Conducted Emission Test Equipment

Equ.No.	Equipment	Manufacturer	Model No.	Serial No.	Last Cal.	Cal. Interval
ENE-001	EMI Test Receiver	Rohde & Schwarz	ESCI	101108	Dec. 29, 2022	1 Year
ENE-158	L.I.S.N	Rohde & Schwarz	NNLK 8129	0373	Nov. 18, 2022	1 Year
ENE-004	L.I.S.N	Schwarzbeck	NSLK 8126	8126-462	July 07, 2023	1 Year
ENE-159	Pulse Limiter	Schwarzbeck	VTSD 9561F-N	0929	Nov. 18, 2022	1 Year
ENE-278	RF Switching unit	HTEC	HRSU	222101	August 22, 2023	1 Year
ENE-083	RF Cable	Hubber Suhner/Swiss	CBL-RE-3	/	June 01, 2023	1 Year

4.2.2 Radiated Emission Test Equipment

Equ. No.	Equipment	Manufacturer	Model No.	Serial No.	Last Cal.	Cal. Interval
ENE-185	EMI Test Receiver	R&S	ESR7	102480	May 18, 2023	1 Year
ENE-190	Antenna multiple	Schwarzbeck	VULB 9163	01499	May 27, 2022	2 Year
ENE-191	Horn antenna	Schwarzbeck	BBHA 9120 D	02588	May 21, 2023	2 Year
ENE-195	Pre-Amplifier	JS Denki	PA09K03-40	JSPA21019	May 27, 2023	1 Year
ENE-204	Low frequency notch filterRf switching	JS Denki	JSDSW-F	JSDSW2211D 02	May 27, 2023	1 Year
ENE-279	RF cable	Rosenberger	L17-C001-7000	/	June 01, 2023	1 Year
ENE-280	RF cable	Rosenberger	L17-C001-3500	/	June 01, 2023	1 Year
ENE-281	RF cable	Rosenberger	L08-C446-1500	/	June 01, 2023	1 Year
ENE-282-1	RF cable	Rosenberger	/	/	June 01, 2023	1 Year
ENE-282-2	RF cable	Rosenberger	/	/	June 01, 2023	1 Year
ENE-171	EXA Signal Analyzer	KEYSIGHT	N9010B	MY60242467	Feb. 28, 2023	1 Year

ENE-198	Pre-amplifier	JS Denki	PA0118-50	JSPA21022	April 28, 2023	1 Year
ENE-193	Horn antenna	Schwarzbeck	BBHA 9170	01190	May 21, 2022	2 Year
ENE-199	Pre-amplifier	JS Denki	PA1840-55	JSPA21023	April 28, 2023	1 Year
ENE-281-1	RF cable	Rosenberger	LA2-C125-3500	/	June 01, 2023	1 Year
ENE-281-2	RF cable	Rosenberger	LA2-C125-1500	/	June 01, 2023	1 Year
ENE-281-3	RF cable	Rosenberger	LU7-C1511-1200	/	June 01, 2023	1 Year
ENE-285-1	RF cable	Rosenberger	LA2-C199-6500	/	June 01, 2023	1 Year
ENE-290-1	RF cable	Schwarzbeck	LA1-C006-4000	/	June 01, 2023	1 Year
ENE-206	High frequency notch filterRf switching	JS Denki	JSDSW-F	202083582	April 28, 2023	1 Year

4.2.3 Radio Frequency Test Equipment

Equ. No.	Equipment	Manufacturer	Model No.	Serial No.	Last Cal.	Cal. Interval
ENE-256	EXA Signal Anaalyzer	Keysight	N9010B	MY62060219	July 05, 2023	1 Year
ENE-172	RF Control Unit	Tonscend	JS0806-2(V.6E)	21L8060521	March 01, 2023	1 Year
ENE-092	DC Power Supply	KEFUNA	KDP3603	2004D3062946	July 07, 2023	1 Year

4.3 DESCRIPTION OF TEST MODES

The EUT has been tested under its typical operating condition.
The EUT configuration for testing is installed on RF field strength measurement to meet the Commissions requirement and operating in a manner which intends to maximize its emission characteristics in a continuous normal application.

The Transmitter was operated in the normal operating mode. The TX frequency was fixed which was for the purpose of the measurements.

Test of channel included the lowest and middle and highest frequency to perform the test, then record on this report.

Those data rates (☒802.11b:1 Mbps;☒802.11g: 6 Mbps;☒802.11n(HT20): MCS0;☒802.11n(HT40): MCS0) were used for all test.

Pre-defined engineering program for regulatory testing used to control the EUT for staying in continuous transmitting and receiving mode is programmed.

☒Frequency and Channel list for 802.11b/g/n (HT20):

Channel	Frequency (MHz)	Channel	Frequency (MHz)	Channel	Frequency (MHz)
1	2412	6	2437	11	2462
2	2417	7	2442		
3	2422	8	2447		
4	2427	9	2452		
5	2432	10	2457		

☒Frequency and Channel list for 802.11n (HT40):

Channel	Frequency (MHz)	Channel	Frequency (MHz)	Channel	Frequency (MHz)
3	2422	6	2437	9	2452
4	2427	7	2442		
5	2432	8	2447		

☒Test Frequency and Channel for 802.11b/g/n (HT20):

Lowest Frequency		Middle Frequency		Highest Frequency	
Channel	Frequency (MHz)	Channel	Frequency (MHz)	Channel	Frequency (MHz)
1	2412	6	2437	11	2462

☒Test Frequency and Channel for 802.11n (HT40):

Lowest Frequency		Middle Frequency		Highest Frequency	
Channel	Frequency (MHz)	Channel	Frequency (MHz)	Channel	Frequency (MHz)
3	2422	6	2437	9	2452

4.4 TEST SOFTWARE

Item	Software
Radiated Emission:	EspRFTestTool_v2.8_Manual (Ver. 2.8)
Conducted Emission	EspRFTestTool_v2.8_Manual (Ver. 2.8)

5 FACILITIES AND ACCREDITATIONS

5.1 FACILITIES

All measurement facilities used to collect the measurement data are located at

EMTEK (NINGBO) CO., LTD.

No. 8, Building 8, Lane 216, Qingyi Road, Ningbo Hi-Tech Zone, Ningbo, Zhejiang, China
The sites are constructed in conformance with the requirements of ANSI C63.7, ANSI C63.10 and CISPR Publication 32.

5.2 LABORATORY ACCREDITATIONS AND LISTINGS

Site Description		
EMC Lab.	:	**Accredited by CNAS** The Certificate Registration Number is L6666. The Laboratory has been assessed and proved to be in compliance with CNAS-CL01:2018 (identical to ISO/IEC 17025:2017) **Designation by FCC** Designation Number: CN1354 Test Firm Registration Number: 427606 **Accredited by A2LA** The certificate is valid until August 4, 2023 **Accredited by Industry Canada** The Conformity Assessment Body Identifier is CN0114 Test Firm Registration Number: 9469A
Name of Firm	:	EMTEK (NINGBO) CO., LTD.
Site Location	:	No. 8, Building 8, Lane 216, Qingyi Road, Ningbo Hi-Tech Zone, Ningbo, Zhejiang, China

6 TEST SYSTEM UNCERTAINTY

The following measurement uncertainty levels have been estimated for tests performed on the apparatus:

Parameter	Uncertainty
Radio Frequency	± 1x10^-5
Maximum Peak Output Power Test	± 1.0 dB
Conducted Emissions Test	± 2.0 dB
Radiated Emission Test	± 2.0 dB
Power Density	± 2.0 dB
Occupied Bandwidth Test	± 1.0 dB
Band Edge Test	± 3 dB
All emission, radiated	± 3 dB
Antenna Port Emission	± 3 dB
Temperature	± 0.5 ℃
Humidity	± 3 %

Measurement Uncertainty for a level of Confidence of 95%

7 SETUP OF EQUIPMENT UNDER TEST

7.1 RADIO FREQUENCY TEST SETUP 1

The WLAN component's antenna ports(s) of the EUT are connected to the measurement instrument per an appropriate attenuator. The EUT is controlled by PC/software to emit the specified signals for the purpose of measurements.

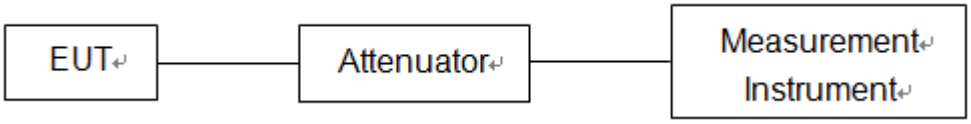

7.2 RADIO FREQUENCY TEST SETUP 2

The test site semi-anechoic chamber has met the requirement of NSA tolerance 4 dB according to the standards: ANSI C63.10. The test distance is 3m.The setup is according to the requirements in Section 13.1.4.1 of ANSI C63.10-2013 and CAN/CSA-CEI/IEC CISPR 22.

Below 30MHz：

The EUT is placed on a turntable 0.8 meters above the ground in the chamber, 3 meter away from the antenna (loop antenna). The Antenna should be positioned with its plane vertical at the specified distance from the EUT androtated about its vertical axis formaximum response at each azimuth about the EUT. The center of the loopshall be 1 m above the ground.For certain applications, the loop antennaplane may also need to be positioned horizontally at the specified distance from the EUT.

30MHz-1GHz：

The EUT is placed on a turntable 0.8 meters above the ground in the chamber, 3 meter away from the antenna. The maximal emission value is acquired by adjusting the antenna height, polarisation and turntable azimuth. Normally, the height range of antenna is 1 m to 4 m, the azimuth range of turntable is 0° to 360°, and the receive antenna has two polarizations Vertical (V) and Horizontal (H).

Above 1GHz：

The EUT is placed on a turntable 1.5 meters above the ground in the chamber, 3 meter away from the antenna. The maximal emission value is acquired by adjusting the antenna height, polarisation and turntable azimuth. Normally, the height range of antenna is 1 m to 4 m, the azimuth range of turntable is 0° to 360°, and the receive antenna has two polarizations Vertical (V) and Horizontal (H).

(a) Radiated Emission Test Set-Up, Frequency Below 30MHz

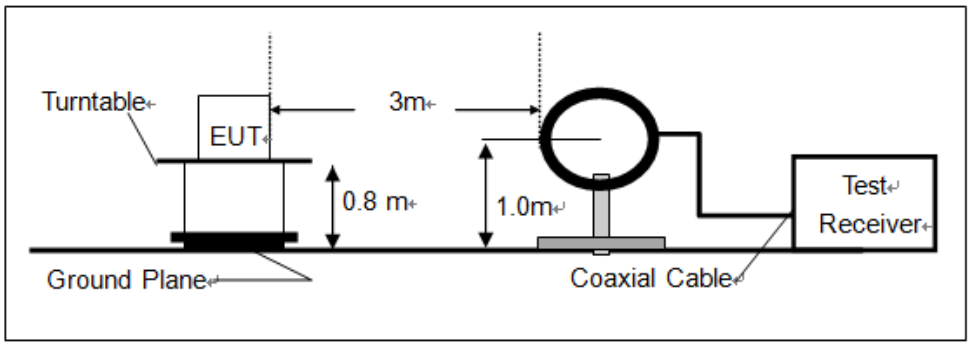

(b)Radiated Emission Test Set-Up, Frequency Below 1000MHz

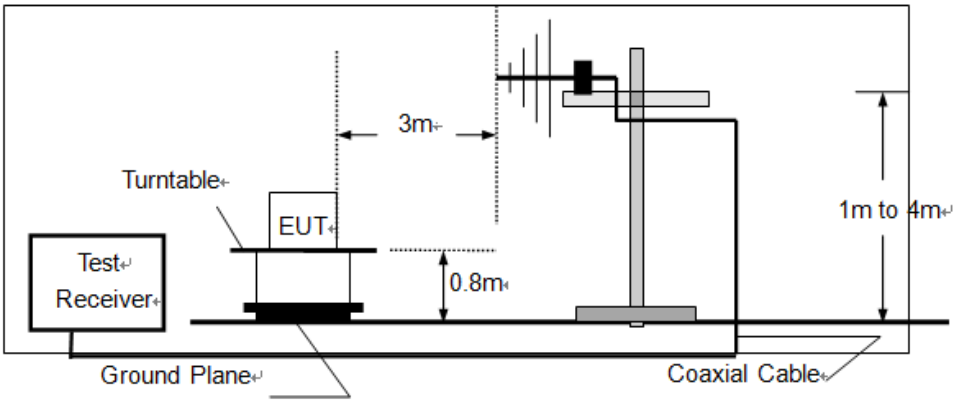

(c) Radiated Emission Test Set-Up, Frequency above 1000MHz

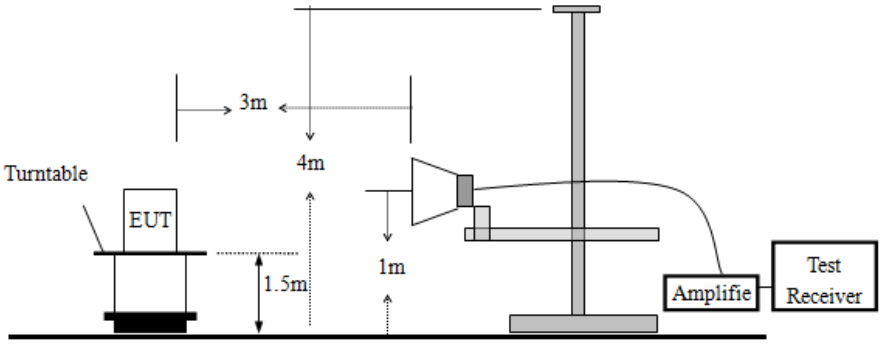

7.3 CONDUCTED EMISSION TEST SETUP

The mains cable of the EUT (maybe per AC/DC Adapter) must be connected to LISN. The LISN shall be placed 0.8 m from the boundary of EUT and bonded to a ground reference plane for LISN mounted on top of the ground reference plane. This distance is between the closest points of the LISN and the EUT. All other units of the EUT and associated equipment shall be at least 0.8m from the LISN.
Ground connections, where required for safety purposes, shall be connected to the reference ground point of the LISN and, where not otherwise provided or specified by the manufacturer, shall be of same length as the mains cable and run parallel to the mains connection at a separation distance of not more than 0.1 m.
According to the requirements in Section 13.1.4.1 of ANSI C63.10-2013 Conducted emissions from the EUT measured in the frequency range between 0.15 MHz and 30 MHz using CISPR Quasi-Peak and average detector mode.

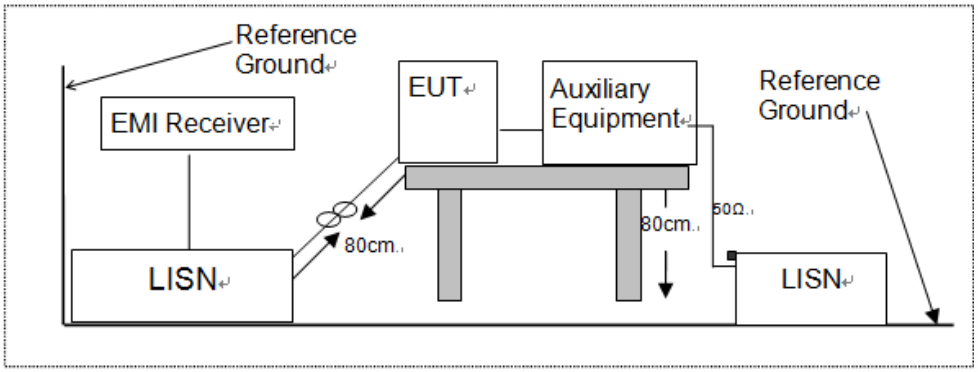

7.4 BLOCK DIAGRAM CONFIGURATION OF TEST SYSTEM

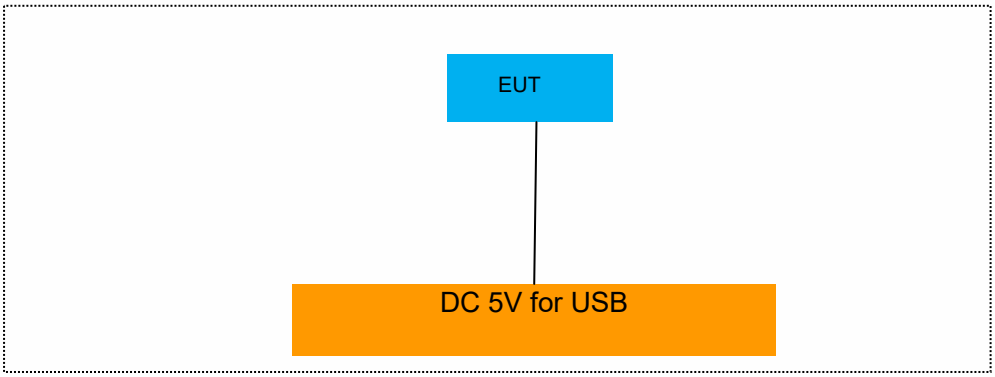

7.5 SUPPORT EQUIPMENT

EUT Cable List and Details			
Cable Description	Length (m)	Shielded/Unshielded	With / Without Ferrite
/	/	/	/

Auxiliary Cable List and Details			
Cable Description	Length (m)	Shielded/Unshielded	With / Without Ferrite
/	/	/	/

Auxiliary Equipment List and Details			
Description	Manufacturer	Model	Serial Number
/	/	/	/

Notes:

1. *All the equipment/cables were placed in the worst-case configuration to maximize the emission during the test.*
2. *Grounding was established in accordance with the manufacturer's requirements and conditions for the intended use.*
3. *Unless otherwise denoted as EUT in 『Remark』 column , device(s) used in tested system is a support equipment*

8 TEST REQUIREMENTS

8.1 DTS (6DB) BANDWIDTH

8.1.1 Applicable Standard

According to FCC Part15.247 (a)(2) and KDB 558074 D01 15.247 Meas Guidance v05r02

8.1.2 Conformance Limit

The minimum -6 dB bandwidth shall be at least 500 kHz.

8.1.3 Test Configuration

Test according to clause 7.1 radio frequency test setup 1

8.1.4 Test Procedure

The EUT was operating in IEEE 802.11b/g/n mode and controlled its channel. Printed out the test result from the spectrum by hard copy function.
The RF output of EUT was connected to the spectrum analyzer by RF cable and attenuator. The path loss was compensated to the results for each measurement.
Set to the maximum power setting and enable the EUT transmit continuously
Set RBW = 100 kHz.
Set the video bandwidth (VBW) =300kHz.
Set Span=2 times OBW
Set Detector = Peak.
Set Trace mode = max hold.
Set Sweep = auto couple.
Allow the trace to stabilize.
Measure the maximum width of the emission that is constrained by the frequencies associated with the two outermost amplitude points (upper and lower frequencies) that are attenuated by 6 dB relative to the maximum level measured in the fundamental emission.
Measure and record the results in the test report.

8.1.5 Test Results

Not Applicable.

Data reference report ENB2306190316W00101R Section 8.1.5.

8.2 MAXIMUM CONDUCTED (AVERAGE) OUTPUT POWER

8.2.1 Applicable Standard

According to FCC Part15.247 (b)(3) and KDB 558074 D01 15.247 Meas Guidance v05r02

8.2.2 Conformance Limit

The maximum peak conducted output power of the intentional radiator for systems using digital modulation in the 2400 - 2483.5 MHz bands shall not exceed: 1 Watt (30dBm).

8.2.3 Test Configuration

Test according to clause 7.1 radio frequency test setup 1

8.2.4 Test Procedure

a) Set span to at least 1.5 times the OBW.
b) Set RBW = 1-5% of the OBW, not to exceed 1 MHz.
c) Set VBW ≥ 3 x RBW.
d) Number of points in sweep ≥ 2 × span / RBW. (This gives bin-to-bin spacing ≤ RBW/2, so that narrowband signals are not lost between frequency bins.)
e) Sweep time = auto.
f) Detector = RMS (i.e., power averaging), if available. Otherwise, use sample detector mode.
g) If transmit duty cycle < 98 %, use a sweep trigger with the level set to enable triggering only on full power pulses. The transmitter shall operate at maximum power control level for the entire duration of every sweep. If the EUT transmits continuously (i.e., with no off intervals) or at duty cycle ≥ 98 %, and if each transmission is entirely at the maximum power control level, then the trigger shall be set to "free run".
h) Trace average at least 100 traces in power averaging (i.e., RMS) mode.
i) Compute power by integrating the spectrum across the OBW of the signal using the instrument's band power measurement function, with band limits set equal to the OBW band edges. If the instrument does not have a band power function, sum the spectrum levels (in power units) at intervals equal to the RBW extending across the entire OBW of the spectrum.

8.2.5 Test Results

Temperature:	24℃
Relative Humidity:	69%
ATM Pressure:	1011 mbar

Operation Mode	Channel Number	Channel Frequency (MHz)	Measurement Level (dBm)	Limit (dBm)	Verdict
802.11b	1	2412	16.07	30	PASS
	6	2437	16.73	30	PASS
	11	2462	16.52	30	PASS
802.11g	1	2412	15.02	30	PASS
	6	2437	16.11	30	PASS
	11	2462	15.37	30	PASS
802.11n (HT20)	1	2412	14.46	30	PASS
	6	2437	15.19	30	PASS
	11	2462	14.40	30	PASS
802.11n (HT40)	3	2422	13.61	30	PASS
	6	2437	14.20	30	PASS
	9	2452	13.86	30	PASS

Test Model	Duty cycle 802.11b Channel 1: 2412MHz

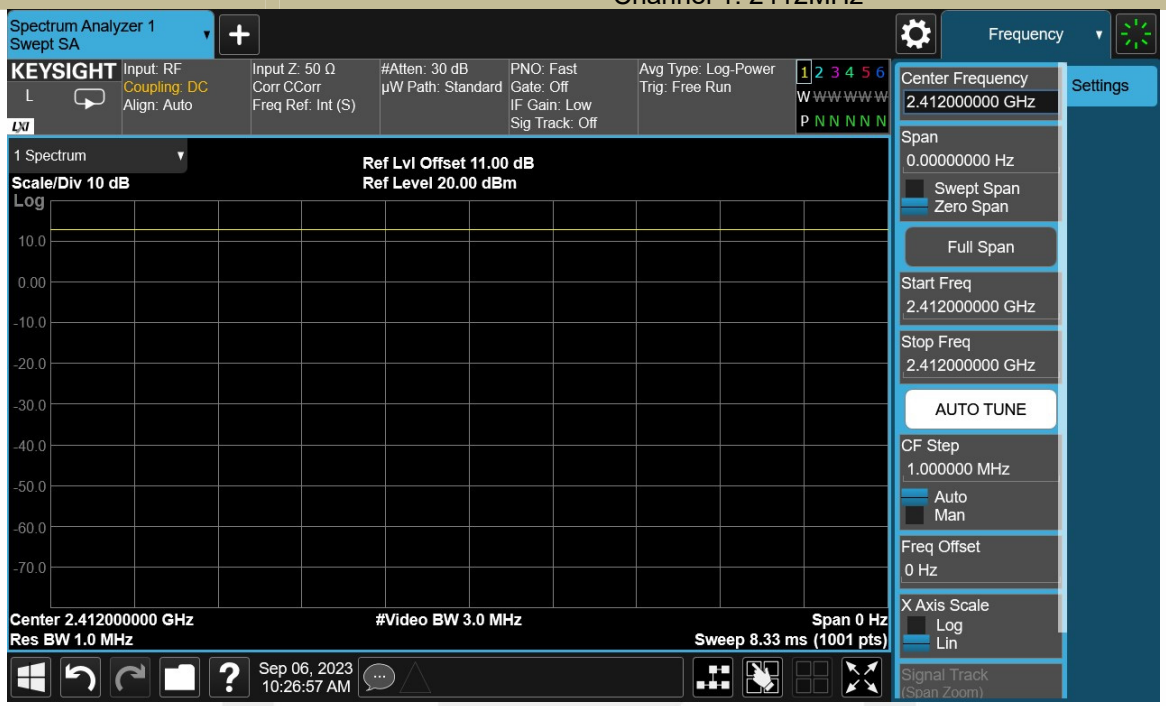

Test Model	Duty cycle 802.11g Channel 1: 2412MHz

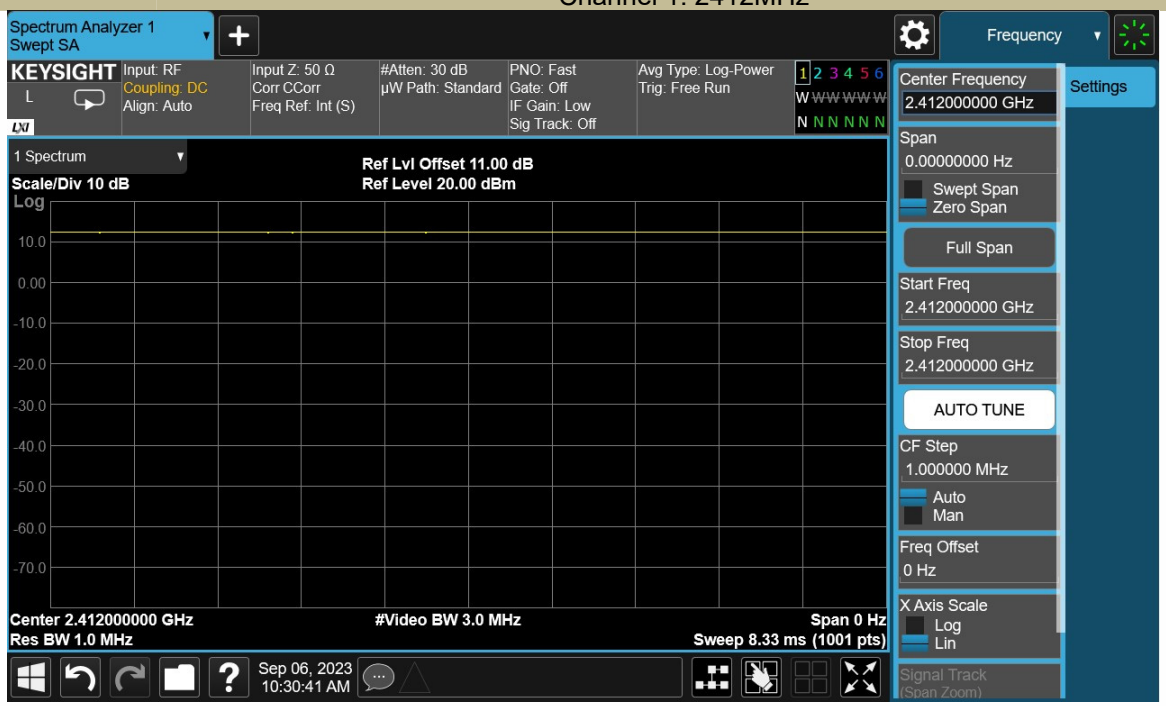

Test Model	Duty cycle 802.11n(HT20) Channel 1: 2412MHz

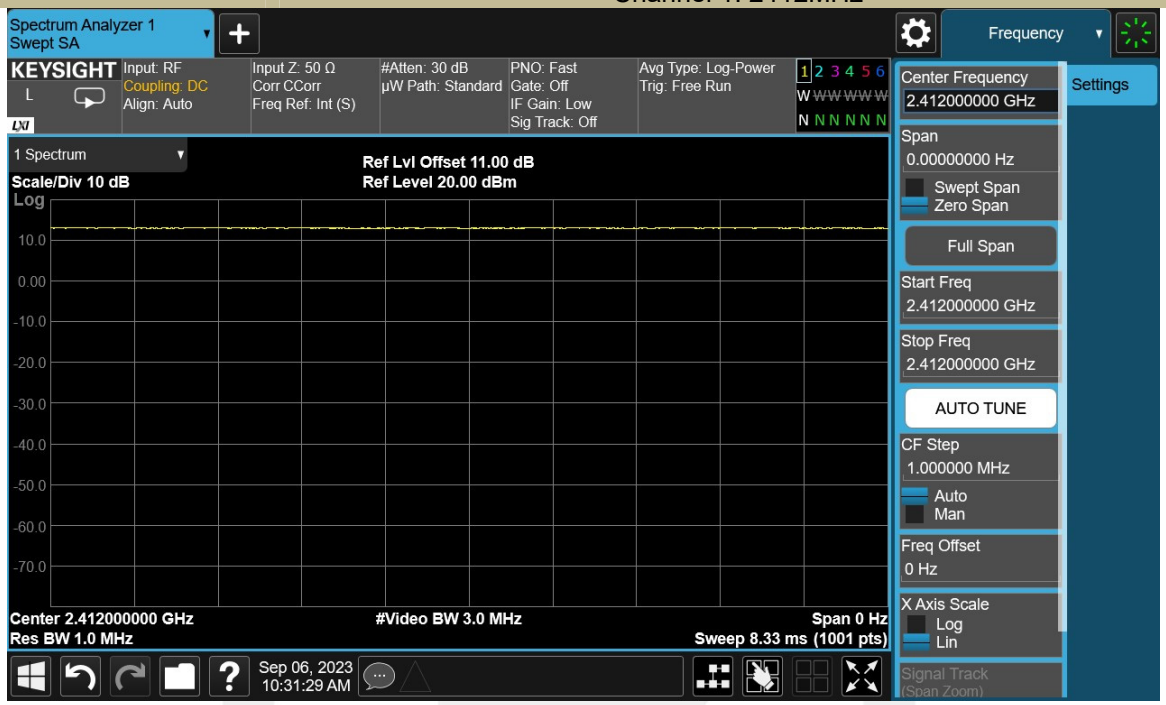

Test Model	Duty cycle 802.11n(HT40) Channel 3: 2422MHz

Test Model	MAXIMUM CONDUCTED(AVERAGE) OUTPUT POWER 802.11b Channel 1: 2412MHz

Test Model	MAXIMUM CONDUCTED(AVERAGE) OUTPUT POWER 802.11b Channel 6: 2437MHz

Test Model	MAXIMUM CONDUCTED(AVERAGE) OUTPUT POWER 802.11b Channel 11: 2462MHz

Test Model	MAXIMUM CONDUCTED(AVERAGE) OUTPUT POWER 802.11g Channel 1: 2412MHz

Test Model	MAXIMUM CONDUCTED(AVERAGE) OUTPUT POWER 802.11g Channel 6: 2437MHz

Test Model	MAXIMUM CONDUCTED(AVERAGE) OUTPUT POWER 802.11g Channel 11: 2462MHz

Test Model	MAXIMUM CONDUCTED(AVERAGE) OUTPUT POWER 802.11n(HT20) Channel 1: 2412MHz

Test Model	MAXIMUM CONDUCTED(AVERAGE) OUTPUT POWER 802.11n(HT20) Channel 6: 2437MHz

Test Model	MAXIMUM CONDUCTED(AVERAGE) OUTPUT POWER 802.11n(HT20) Channel 11: 2462MHz

Test Model	MAXIMUM CONDUCTED(AVERAGE) OUTPUT POWER 802.11n(HT40) Channel 3: 2422MHz

Test Model	MAXIMUM CONDUCTED(AVERAGE) OUTPUT POWER 802.11n(HT40) Channel 6: 2437MHz

Test Model	MAXIMUM CONDUCTED(AVERAGE) OUTPUT POWER 802.11n(HT40) Channel 9: 2452MHz

8.3 MAXIMUM POWER SPECTRAL DENSITY

8.3.1 Applicable Standard

According to FCC Part15.247(e) and KDB 558074 D01 15.247 Meas Guidance v05r02

8.3.2 Conformance Limit

The transmitter power spectral density conducted from the transmitter to the antenna shall not be greater than 8 dBm in any 3 kHz band during any time interval of continuous transmission.

8.3.3 Test Configuration

Test according to clause 7.1 radio frequency test setup 1

8.3.4 Test Procedure

This procedure shall be used if maximum peak conducted output power was used to demonstrate compliance
The transmitter output (antenna port) was connected to the spectrum analyzer
Set analyzer center frequency to DTS channel center frequency.
Set the span to 1.5 times the DTS bandwidth.
Set the RBW to: 3 kHz
Set the VBW to:10 kHz.
Set Detector = peak.
Set Sweep time = auto couple.
Set Trace mode = max hold.
Allow trace to fully stabilize.
Use the peak marker function to determine the maximum amplitude level within the RBW.
Note: If antenna Gain exceeds 6 dBi, then PSD Limit=8-(Gain- 6)

8.3.5 Test Results

Not Applicable.

Data reference report ENB2306190316W00101R Section 8.3.5.

8.4 UNWANTED EMISSIONS IN NON-RESTRICTED FREQUENCY BANDS

8.4.1 Applicable Standard

According to FCC Part15.247(d) and KDB 558074 D01 15.247 Meas Guidance v05r02

8.4.2 Conformance Limit

According to FCC Part 15.247(d):
In any 100 kHz bandwidth outside the frequency band in which the spread spectrum or digitally modulated intentional radiator is operating, the radio frequency power that is produced by the intentional radiator shall be at least 20 dB below that in the 100 kHz bandwidth within the band that contains the highest level of the desired power, based on either an RF conducted or a radiated measurement, provided the transmitter demonstrates compliance with the peak conducted power limits. If the transmitter complies with the conducted power limits based on the use of RMS averaging over a time interval, as permitted under paragraph (b)(3) of this section, the attenuation required under this paragraph shall be 30 dB instead of 20 dB.

8.4.3 Test Configuration

Test according to clause 7.1 radio frequency test setup 1

8.4.4 Test Procedure

The transmitter output (antenna port) was connected to the spectrum analyzer

- **Reference level measurement**

Establish a reference level by using the following procedure:
Set instrument center frequency to DTS channel center frequency.
Set the span to ≥ 1.5 times the DTS bandwidth.
Set the RBW = 100 kHz.
Set the VBW ≥ 3 x RBW.
Set Detector = peak.
Set Sweep time = auto couple.
Set Trace mode = max hold.
Allow trace to fully stabilize.
Use the peak marker function to determine the maximum PSD level.
Note that the channel found to contain the maximum PSD level can be used to establish the reference level.

- **Emission level measurement**

Set the center frequency and span to encompass frequency range to be measured.
Set the RBW = 100 kHz.
Set the VBW =300 kHz.
Set Detector = peak
Sweep time = auto couple.
Trace mode = max hold.
Allow trace to fully stabilize.
Use the peak marker function to determine the maximum amplitude level.
Ensure that the amplitude of all unwanted emissions outside of the authorized frequency band (excluding restricted frequency bands) are attenuated by at least the minimum requirements . Report the three highest emissions relative to the limit.

8.4.5 Test Results

Not Applicable.

Data reference report ENB2306190316W00101R Section 8.4.5.

8.5 RADIATED SPURIOUS EMISSION

8.5.1 Applicable Standard

According to FCC Part 15.247(d) and 15.209 and KDB 558074 D01 15.247 Meas Guidance v05r02

8.5.2 Conformance Limit

According to FCC Part 15.247(d): radiated emissions which fall in the restricted bands, as defined in §15.205(a), must also comply with the radiated emission limits specified in §15.209(a) (see §15.205(c)).
According to FCC Part15.205, Restricted bands

MHz	MHz	MHz	GHz
0.090-0.110	16.42-16.423	399.9-410	4.5-5.15
10.495-0.505	16.69475-16.69525	608-614	5.35-5.46
2.1735-2.1905	16.80425-16.80475	960-1240	7.25-7.75
4.125-4.128	25.5-25.67	1300-1427	8.025-8.5
4.17725-4.17775	37.5-38.25	1435-1626.5	9.0-9.2
4.20725-4.20775	73-74.6	1645.5-1646.5	9.3-9.5
6.215-6.218	74.8-75.2	1660-1710	10.6-12.7
6.26775-6.26825	123-138	2200-2300	14.47-14.5
8.291-8.294	149.9-150.05	2310-2390	15.35-16.2
8.362-8.366	156.52475-156.52525	2483.5-2500	17.7-21.4
8.37625-8.38675	156.7-156.9	2690-2900	22.01-23.12
8.41425-8.41475	162.0125-167.17	3260-3267	23.6-24.0
12.29-12.293	167.72-173.2	3332-3339	31.2-31.8
12.51975-12.52025	240-285	3345.8-3358	36.43-36.5
12.57675-12.57725	322-335.4	3600-4400	(2)
13.36-13.41			

According to FCC Part15.205,the level of any transmitter spurious emission in Restricted bands shall not exceed the level of the emission specified in the following table

Restricted Frequency(MHz)	Field Strength (μV/m)	Field Strength (dBμV/m)	Measurement Distance
0.009-0.490	2400/F(KHz)	20 log (uV/m)	300
0.490-1.705	24000/F(KHz)	20 log (uV/m)	30
1.705-30	30	29.5	30
30-88	100	40	3
88-216	150	43.5	3
216-960	200	46	3
Above 960	500	54	3

8.5.3 Test Configuration

Test according to clause 7.2 radio frequency test setup 2

8.5.4 Test Procedure

This test is required for any spurious emission that falls in a Restricted Band, as defined in Section 15.205. It must be performed with the highest gain of each type of antenna proposed for use with the EUT. Use the following spectrum analyzer settings:
The EUT was placed on a turn table which is 0.8m above ground plane.
Maximum procedure was performed on the highest emissions to ensure EUT compliance.
Span = wide enough to fully capture the emission being measured
RBW = 1 MHz for f ≥ 1 GHz(1GHz to 25GHz), 100 kHz for f < 1 GHz(30MHz to 1GHz), 200Hz for f<150KHz(9KHz to 150KHz), 9KHz for f<30MHz(150KHz to 30KHz)
VBW ≥ RBW
Sweep = auto

Detector function = peak
Trace = max hold
Follow the guidelines in ANSI C63.10-2013 with respect to maximizing the emission by rotating the EUT, measuring the emission while the EUT is situated in three orthogonal planes (if appropriate), adjusting the measurement antenna height and polarization, etc. A pre-amp and a high pass filter are required for this test, in order to provide the measuring system with sufficient sensitivity. Allow the trace to stabilize. The peak reading of the emission, after being corrected by the antenna factor, cable loss, pre-amp gain, etc., is the peak field strength, which must comply with the limit specified in Section 15.35(b). Submit this data.
Now set the VBW to 10 Hz, while maintaining all of the other instrument settings. This peak level, once corrected, must comply with the limit specified in Section 15.209. If the dwell time per channel of the hopping signal is less than 100 ms, then the reading obtained with the 10 Hz VBW may be further adjusted by a “duty cycle correction factor”, derived from 20log(dwell time/100 ms), in an effort to demonstrate compliance with the 15.209 limit. Submit this data.
Repeat above procedures until all frequency measured was complete.

8.5.5 Test Results

Temperature:	18℃
Relative Humidity:	70%
ATM Pressure:	1011 mbar

■ Spurious Emission below 30MHz(9KHz to 30MHz)

Freq. (MHz)	Ant.Pol.	Emission Level(dBuV/m)		Limit 3m(dBuV/m)		Over(dB)	
	H/V	PK	AV	PK	AV	PK	AV
--	--	--	--	--	--	--	--

Note: the amplitude of spurious emission that is attenuated by more than 20dB below the permissible limit has no need to be reported.
Distance extrapolation factor =40log(Specific distance/ test distance)(dB);
Limit line=Specific limits(dBuV) + distance extrapolation factor

- Spurious Emission Above 1GHz(1GHz to 25GHz)

Not Applicable.

Data reference report ENB2306190316W00101R Section 8.5.5.

- Spurious Emission in Restricted Band 2310-2390MHz and 2483.5-2500MHz

Not Applicable.

Data reference report ENB2306190316W00101R Section 8.5.5.

- Spurious Emission below 1GHz (30MHz to 1GHz)
- All modes 2.4G 802.11b/g/n have been tested, and the worst result 802.11b recorded was report as below:

Project Information			
Mode:	TX2412 MHz	Voltage:	DC 3V
Environment:	Temp: 21℃; Humi:70%	Engineer:	Jackson Xue

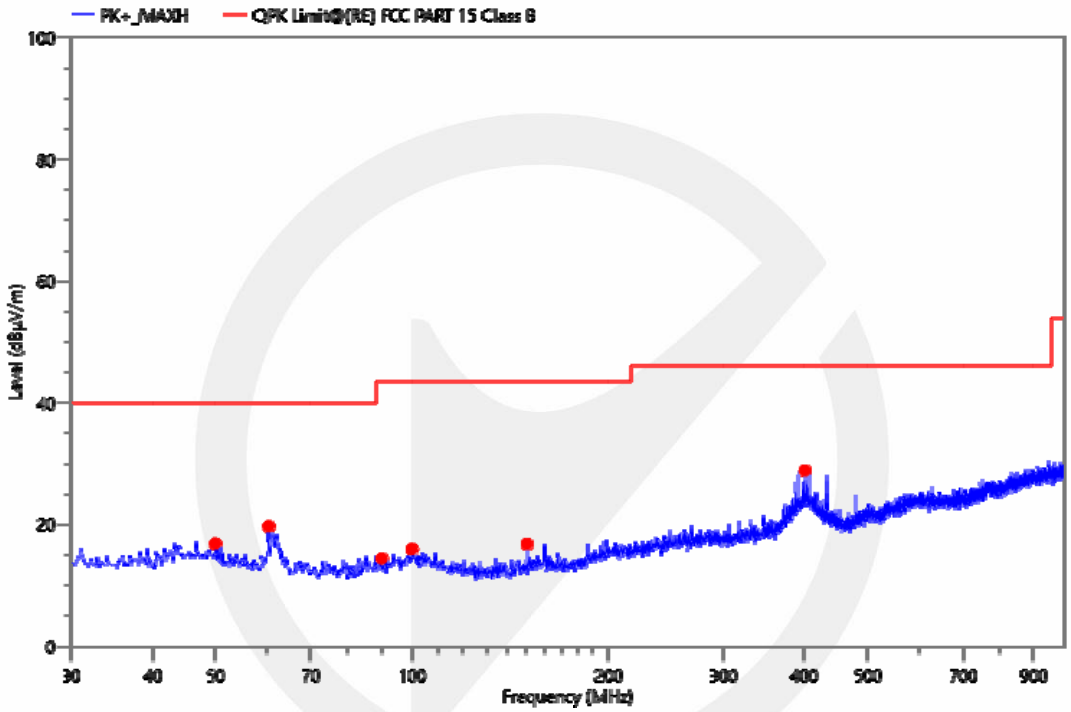

Freq. (MHz)	Reading (dBµV)	Meas. (dBµV/m)	Limit (dBµV/m)	Margin (dB)	Det.	Height (cm)	Pol.	Azimuth (deg)	Corr. (dB)	Verdict
49.982	40.60	16.83	40.00	23.17	QPK	100	V	189.2	-23.77	PASS
60.167	45.38	19.70	40.00	20.30	QPK	100	V	35.6	-25.68	PASS
89.752	39.67	14.39	43.50	29.11	QPK	100	V	95.7	-25.28	PASS
99.937	40.22	15.95	43.50	27.55	QPK	200	V	264.2	-24.27	PASS
149.989	43.73	16.78	43.50	26.72	QPK	100	V	230.3	-26.95	PASS
401.316	48.85	28.85	46.00	17.15	QPK	100	V	79.7	-20.00	PASS

Project Information			
Mode:	TX2412 MHz	Voltage:	DC 3V
Environment:	Temp: 21℃; Humi:70%	Engineer:	Jackson Xue

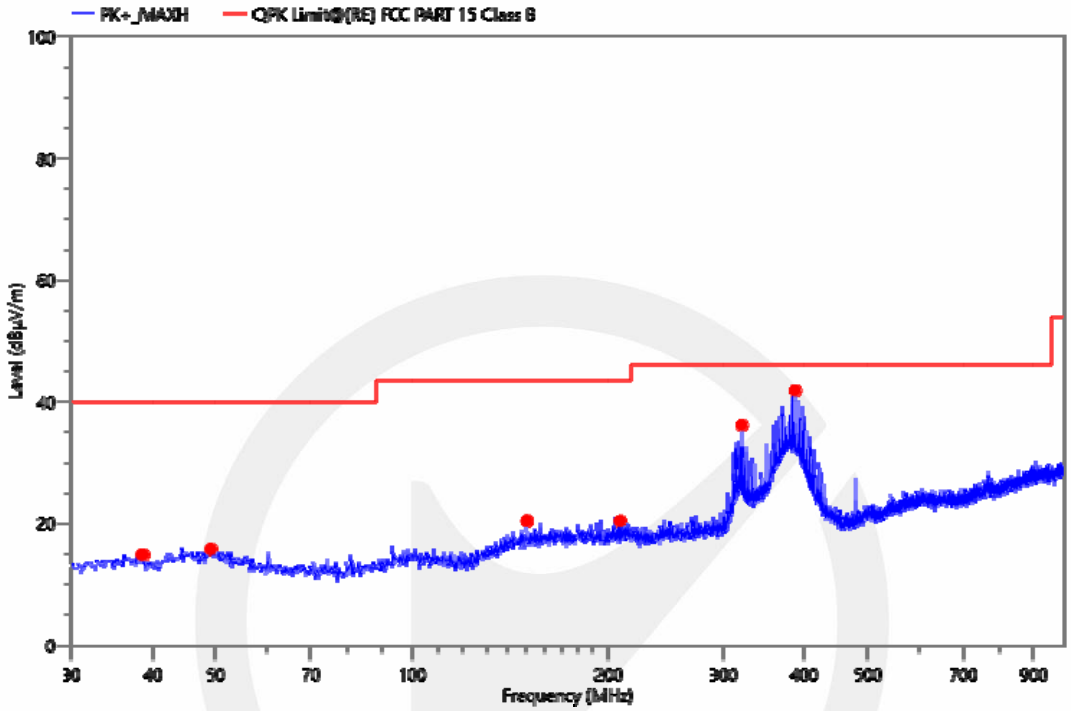

Freq. (MHz)	Reading (dBµV)	Meas. (dBµV/m)	Limit (dBµV/m)	Margin (dB)	Det.	Height (cm)	Pol.	Azimuth (deg)	Corr. (dB)	Verdict
38.633	39.47	14.85	40.00	25.15	QPK	100	H	212.5	-24.62	PASS
49.206	39.53	15.78	40.00	24.22	QPK	200	H	254.2	-23.75	PASS
149.989	47.39	20.44	43.50	23.06	QPK	100	H	228.6	-26.95	PASS
208.189	44.41	20.40	43.50	23.10	QPK	100	H	192.3	-24.01	PASS
320.030	57.11	36.17	46.00	9.83	QPK	100	H	208.4	-20.94	PASS
387.348	62.05	41.87	46.00	4.13	QPK	100	H	360.0	-20.18	PASS

Project Information			
Mode:	TX2437 MHz	Voltage:	DC 3V
Environment:	Temp: 21℃; Humi:70%	Engineer:	Jackson Xue

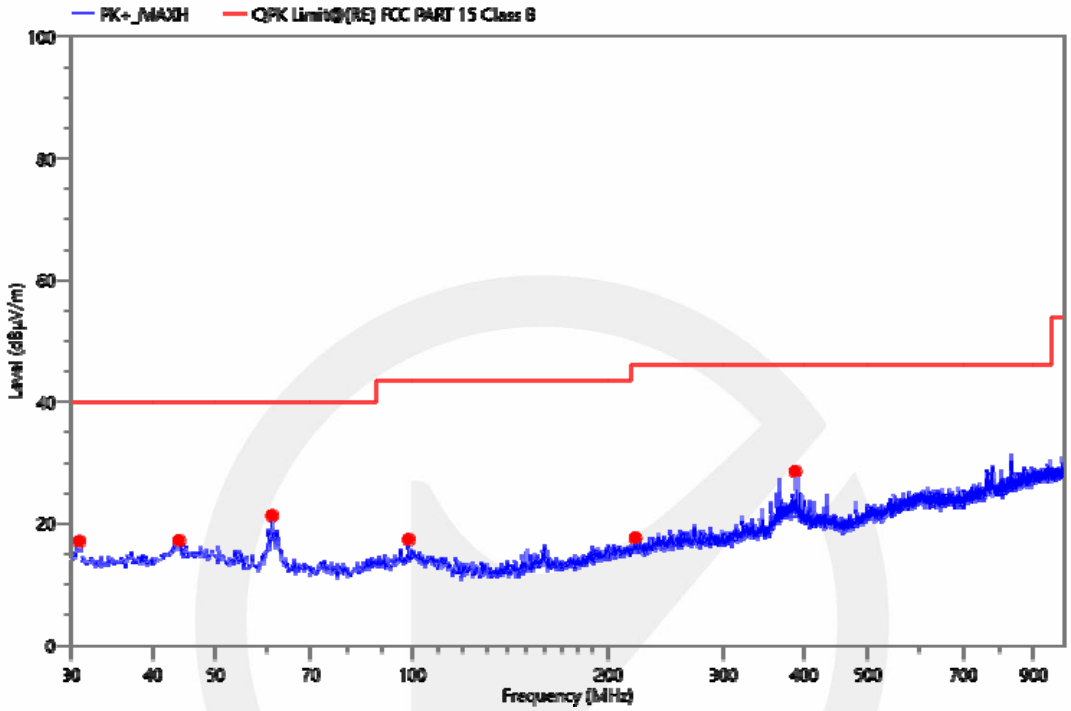

Freq. (MHz)	Reading (dBµV)	Meas. (dBµV/m)	Limit (dBµV/m)	Margin (dB)	Det.	Height (cm)	Pol.	Azimuth (deg)	Corr. (dB)	Verdict
30.873	42.46	17.10	40.00	22.90	QPK	100	V	358.4	-25.36	PASS
43.871	41.11	17.21	40.00	22.79	QPK	100	V	357.4	-23.9	PASS
60.846	47.07	21.35	40.00	18.65	QPK	100	V	349.6	-25.72	PASS
98.676	41.79	17.40	43.50	26.10	QPK	100	V	115.1	-24.39	PASS
219.732	41.28	17.64	46.00	28.36	QPK	200	V	246.7	-23.64	PASS
387.348	48.75	28.57	46.00	17.43	QPK	100	V	64.5	-20.18	PASS

Project Information			
Mode:	TX2437 MHz	Voltage:	DC 3V
Environment:	Temp: 21℃; Humi:70%	Engineer:	Jackson Xue

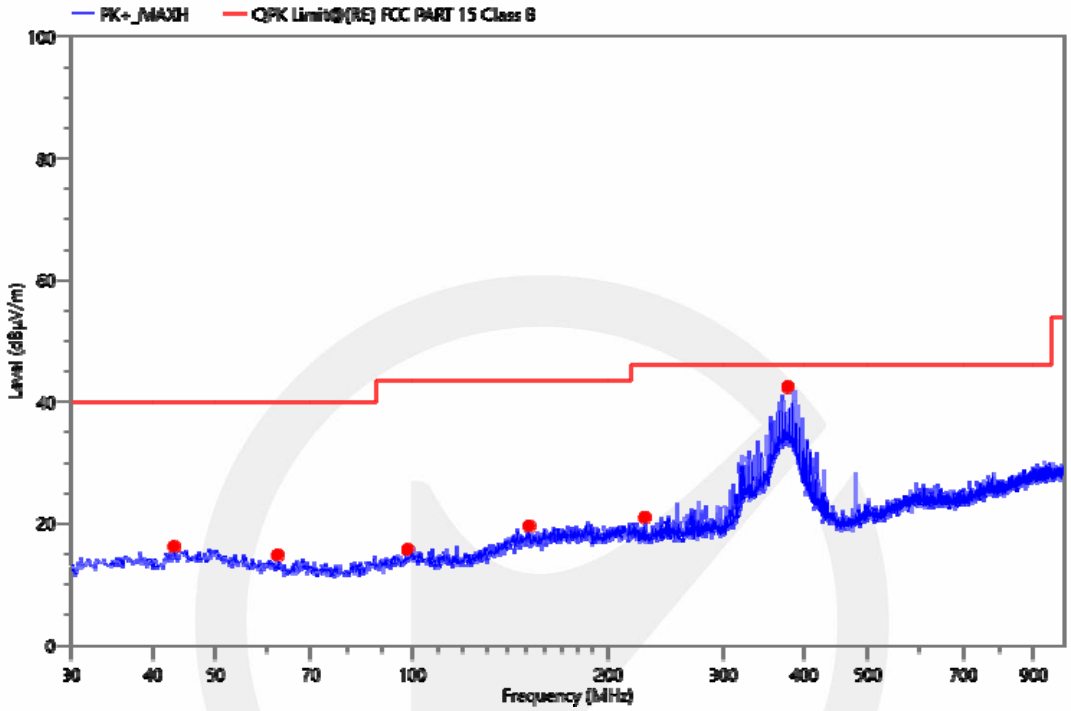

Freq. (MHz)	Reading (dBµV)	Meas. (dBµV/m)	Limit (dBµV/m)	Margin (dB)	Det.	Height (cm)	Pol.	Azimuth (deg)	Corr. (dB)	Verdict
43.095	40.28	16.22	40.00	23.78	QPK	100	H	236.6	-24.06	PASS
62.107	40.64	14.83	40.00	25.17	QPK	100	H	49.7	-25.81	PASS
98.385	40.16	15.74	43.50	27.76	QPK	200	H	169.4	-24.42	PASS
151.153	46.46	19.58	43.50	23.92	QPK	100	H	156.9	-26.88	PASS
227.298	44.43	21.02	46.00	24.98	QPK	200	H	0	-23.41	PASS
377.163	62.57	42.48	46.00	3.52	QPK	100	H	360.0	-20.09	PASS

Project Information			
Mode:	TX2462 MHz	Voltage:	DC 3V
Environment:	Temp: 21℃; Humi:70%	Engineer:	Jackson Xue

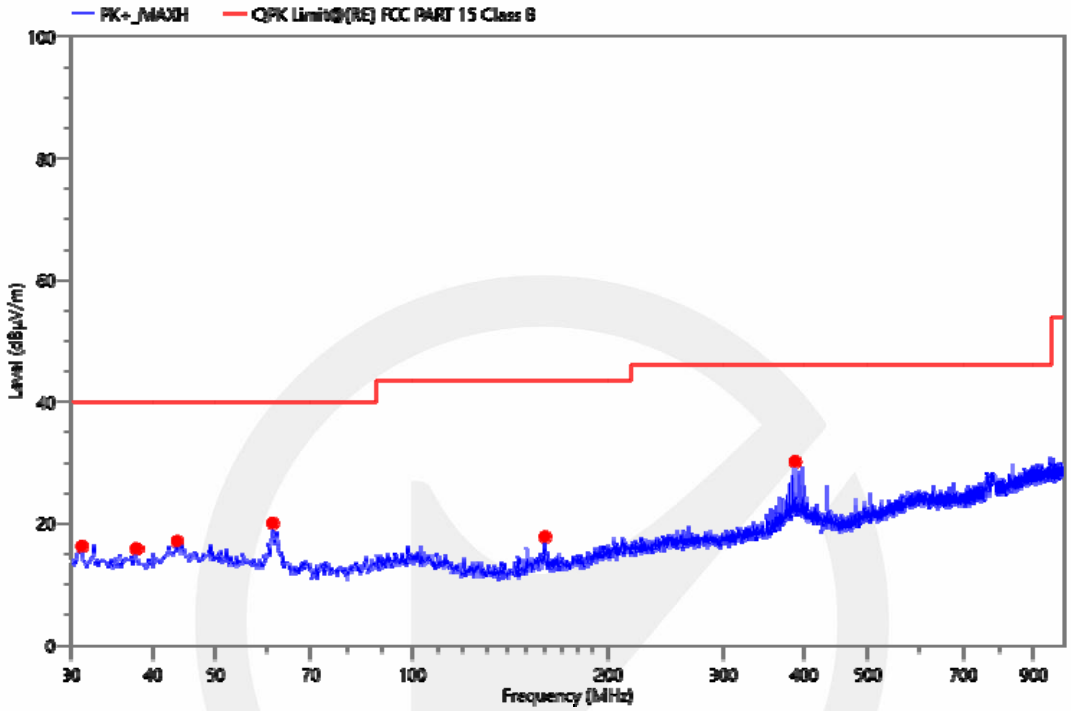

Freq. (MHz)	Reading (dBµV)	Meas. (dBµV/m)	Limit (dBµV/m)	Margin (dB)	Det.	Height (cm)	Pol.	Azimuth (deg)	Corr. (dB)	Verdict
31.164	41.54	16.26	40.00	23.74	QPK	100	V	118.6	-25.28	PASS
37.857	40.43	15.88	40.00	24.12	QPK	100	V	298.9	-24.55	PASS
43.580	41.05	17.09	40.00	22.91	QPK	100	V	122.1	-23.96	PASS
61.040	45.79	20.06	40.00	19.94	QPK	100	V	38.8	-25.73	PASS
159.980	44.22	17.83	43.50	25.67	QPK	100	V	26.9	-26.39	PASS
387.348	50.36	30.18	46.00	15.82	QPK	100	V	234.6	-20.18	PASS

Project Information			
Mode:	TX2462 MHz	Voltage:	DC 3V
Environment:	Temp: 21℃; Humi:70%	Engineer:	Jackson Xue

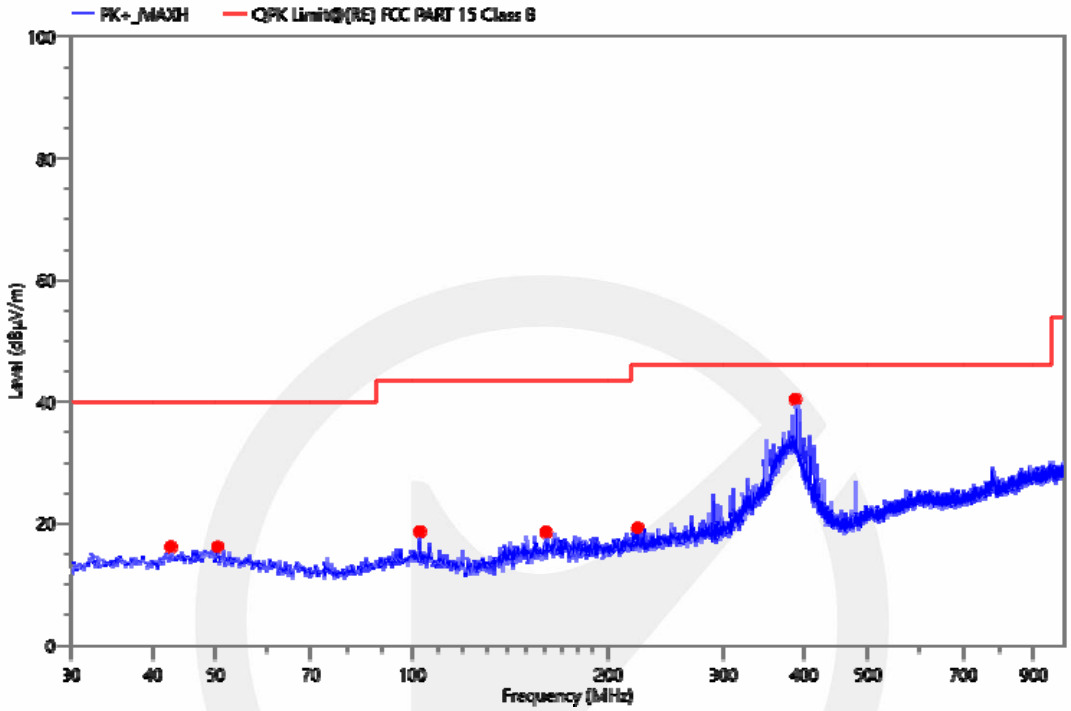

Freq. (MHz)	Reading (dBµV)	Meas. (dBµV/m)	Limit (dBµV/m)	Margin (dB)	Det.	Height (cm)	Pol.	Azimuth (deg)	Corr. (dB)	Verdict
42.610	40.36	16.19	40.00	23.81	QPK	100	H	205.1	-24.17	PASS
50.370	39.99	16.15	40.00	23.85	QPK	100	H	314.7	-23.84	PASS
102.750	43.24	18.69	43.50	24.81	QPK	100	H	199.8	-24.55	PASS
160.465	44.99	18.61	43.50	24.89	QPK	100	H	0	-26.38	PASS
221.672	42.85	19.26	46.00	26.74	QPK	100	H	53.9	-23.59	PASS
387.348	60.61	40.43	46.00	5.57	QPK	100	H	31.9	-20.18	PASS

Project Information			
Mode:	TX2412 MHz	Voltage:	AC 24V/60Hz
Environment:	Temp: 21℃; Humi:70%	Engineer:	Jackson Xue

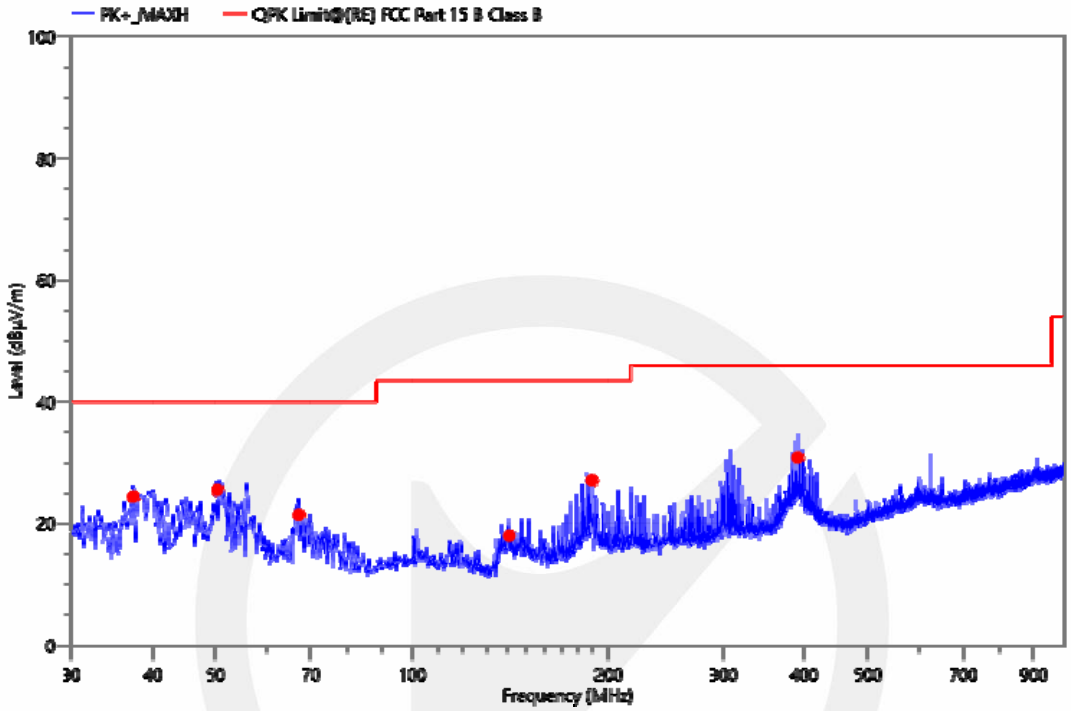

Freq. (MHz)	Reading (dBµV)	Meas. (dBµV/m)	Limit (dBµV/m)	Margin (dB)	Det.	Height (cm)	Pol.	Azimuth (deg)	Corr. (dB)	Verdict
37.469	49.14	24.38	40.00	15.62	QPK	100	V	25.9	-24.76	PASS
50.370	49.73	25.51	40.00	14.49	QPK	100	V	101.4	-24.22	PASS
67.054	48.08	21.38	40.00	18.62	QPK	100	V	228.2	-26.7	PASS
140.968	45.93	17.95	43.50	25.55	QPK	100	V	245.4	-27.98	PASS
189.274	52.60	27.06	43.50	16.44	QPK	100	V	286.9	-25.54	PASS
391.131	51.25	30.78	46.00	15.22	QPK	100	V	293.2	-20.47	PASS

Project Information			
Mode:	TX2412 MHz	Voltage:	AC 24V/60Hz
Environment:	Temp: 21℃; Humi:70%	Engineer:	Jackson Xue

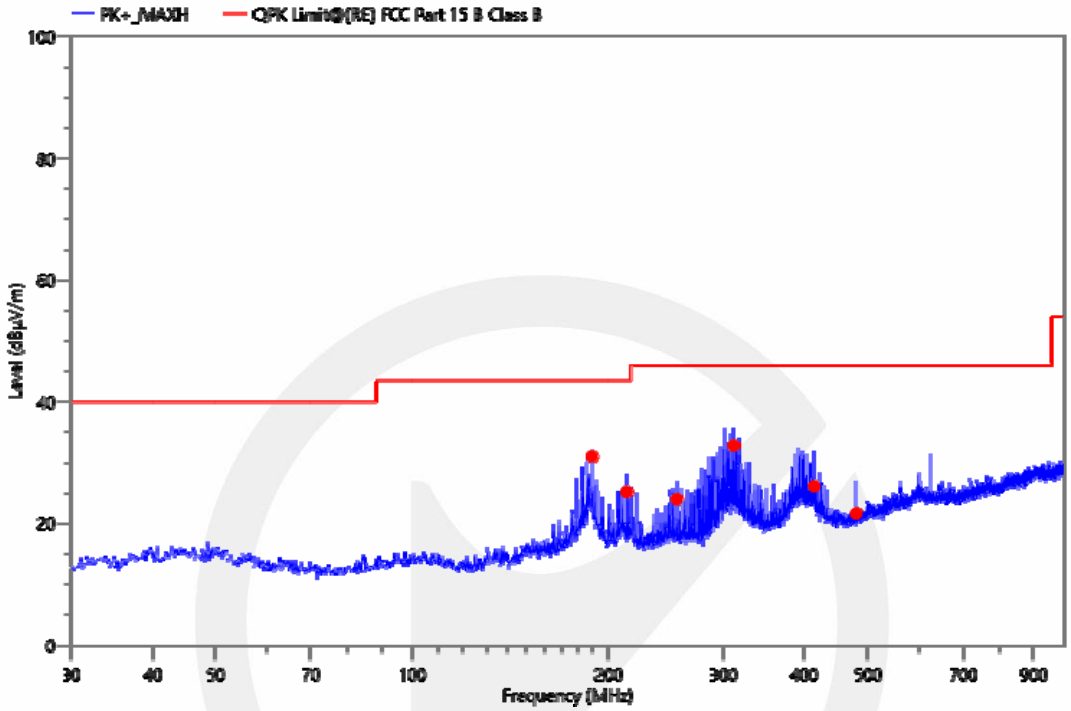

Freq. (MHz)	Reading (dBµV)	Meas. (dBµV/m)	Limit (dBµV/m)	Margin (dB)	Det.	Height (cm)	Pol.	Azimuth (deg)	Corr. (dB)	Verdict
189.274	56.53	30.99	43.50	12.51	QPK	100	H	270.6	-25.54	PASS
213.330	49.45	25.14	43.50	18.36	QPK	100	H	285.7	-24.31	PASS
255.234	46.68	23.95	46.00	22.05	QPK	100	H	261.8	-22.73	PASS
311.203	54.51	32.76	46.00	13.24	QPK	100	H	282.5	-21.75	PASS
415.187	45.60	26.06	46.00	19.94	QPK	100	H	256.2	-19.54	PASS
480.080	40.47	21.62	46.00	24.38	QPK	100	H	75.5	-18.85	PASS

Project Information			
Mode:	TX2437 MHz	Voltage:	AC 24V/60Hz
Environment:	Temp: 21℃; Humi:70%	Engineer:	Jackson Xue

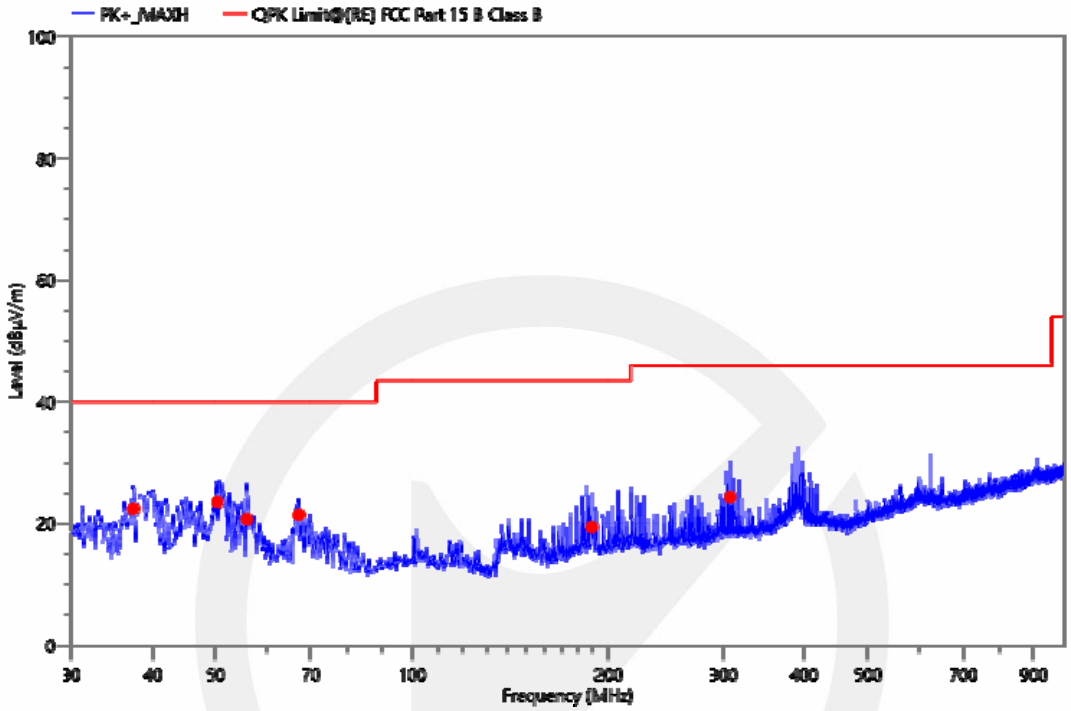

Freq. (MHz)	Reading (dBµV)	Meas. (dBµV/m)	Limit (dBµV/m)	Margin (dB)	Det.	Height (cm)	Pol.	Azimuth (deg)	Corr. (dB)	Verdict
37.469	47.14	22.38	40.00	17.62	QPK	100	V	25.9	-24.76	PASS
50.370	47.73	23.51	40.00	16.49	QPK	100	V	101.4	-24.22	PASS
55.996	45.85	20.66	40.00	19.34	QPK	100	V	180.3	-25.19	PASS
67.054	48.08	21.38	40.00	18.62	QPK	100	V	228.2	-26.7	PASS
189.274	44.90	19.36	43.50	24.14	QPK	100	V	286.9	-25.54	PASS
307.323	46.22	24.27	46.00	21.73	QPK	100	V	167.6	-21.95	PASS

Project Information			
Mode:	TX2437 MHz	Voltage:	AC 24V/60Hz
Environment:	Temp: 21℃; Humi:70%	Engineer:	Jackson Xue

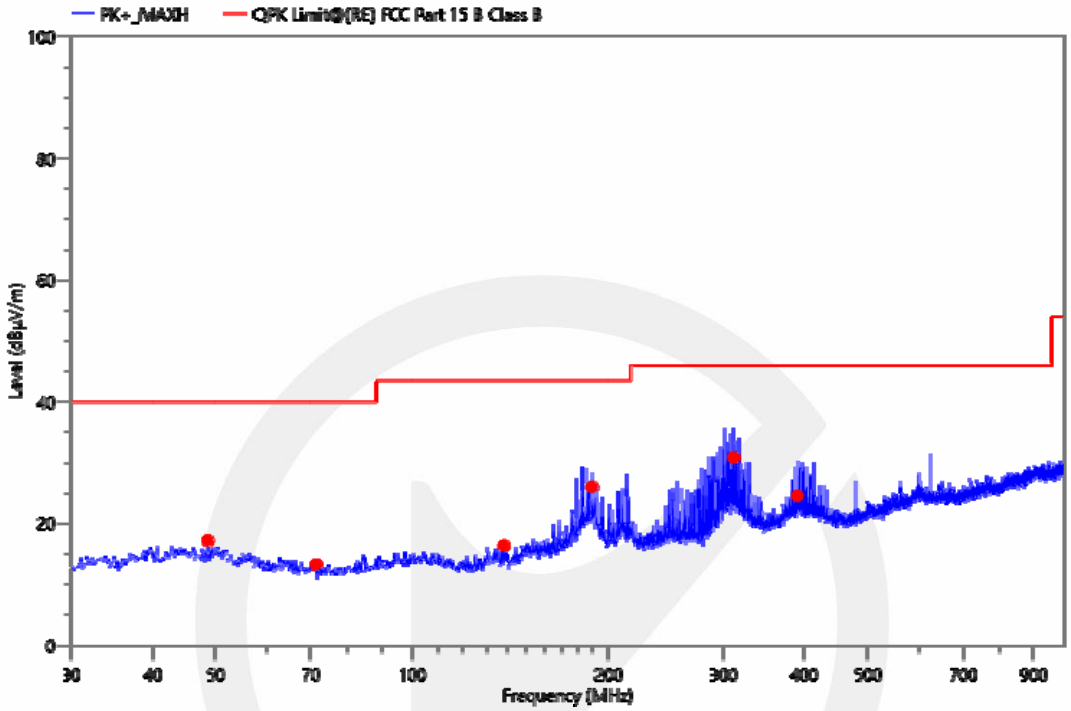

Freq. (MHz)	Reading (dBµV)	Meas. (dBµV/m)	Limit (dBµV/m)	Margin (dB)	Det.	Height (cm)	Pol.	Azimuth (deg)	Corr. (dB)	Verdict
48.624	41.34	17.21	40.00	22.79	QPK	100	H	93.8	-24.13	PASS
71.322	40.30	13.27	40.00	26.73	QPK	100	H	253.8	-27.03	PASS
138.058	44.39	16.38	43.50	27.12	QPK	200	H	242.3	-28.01	PASS
189.274	51.53	25.99	43.50	17.51	QPK	100	H	270.6	-25.54	PASS
311.203	52.51	30.76	46.00	15.24	QPK	100	H	282.5	-21.75	PASS
391.131	44.98	24.51	46.00	21.49	QPK	100	H	253.0	-20.47	PASS

Project Information			
Mode:	TX2462 MHz	Voltage:	AC 24V/60Hz
Environment:	Temp: 21℃; Humi:70%	Engineer:	Jackson Xue

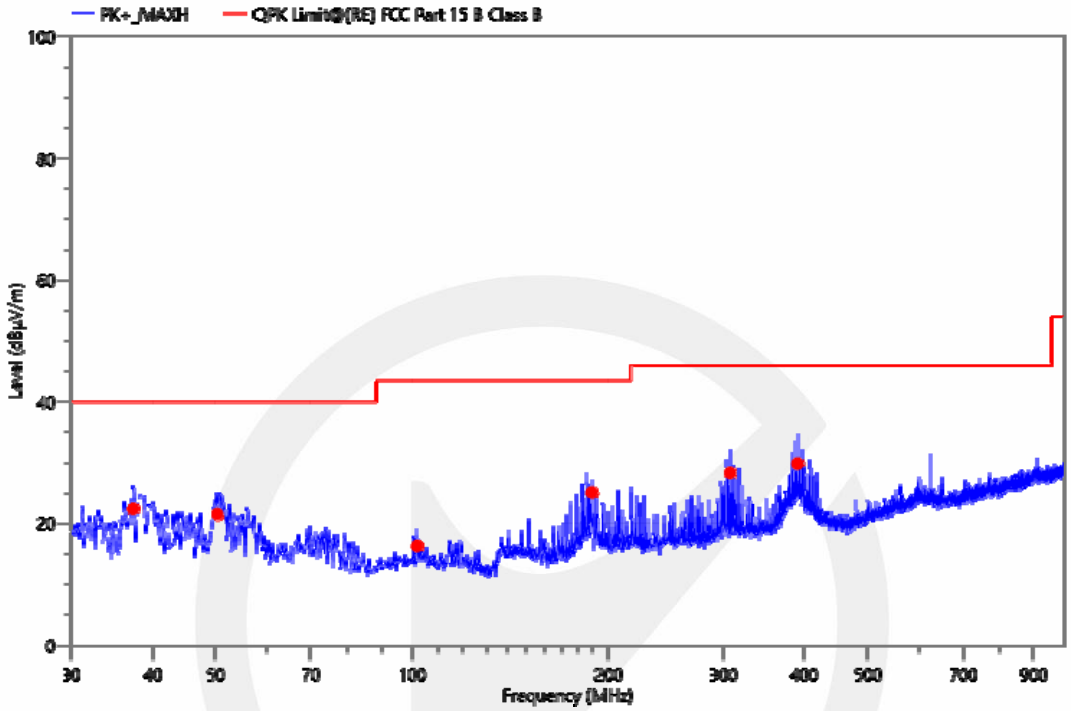

Freq. (MHz)	Reading (dBµV)	Meas. (dBµV/m)	Limit (dBµV/m)	Margin (dB)	Det.	Height (cm)	Pol.	Azimuth (deg)	Corr. (dB)	Verdict
37.469	47.14	22.38	40.00	17.62	QPK	100	V	25.9	-24.76	PASS
50.370	45.73	21.51	40.00	18.49	QPK	100	V	101.4	-24.22	PASS
101.877	41.68	16.26	43.50	27.24	QPK	100	V	0.1	-25.42	PASS
189.274	50.60	25.06	43.50	18.44	QPK	100	V	286.9	-25.54	PASS
307.323	50.22	28.27	46.00	17.73	QPK	100	V	167.6	-21.95	PASS
391.131	50.25	29.78	46.00	16.22	QPK	100	V	293.2	-20.47	PASS

Project Information			
Mode:	TX2462 MHz	Voltage:	AC 24V/60Hz
Environment:	Temp: 21℃; Humi:70%	Engineer:	Jackson Xue

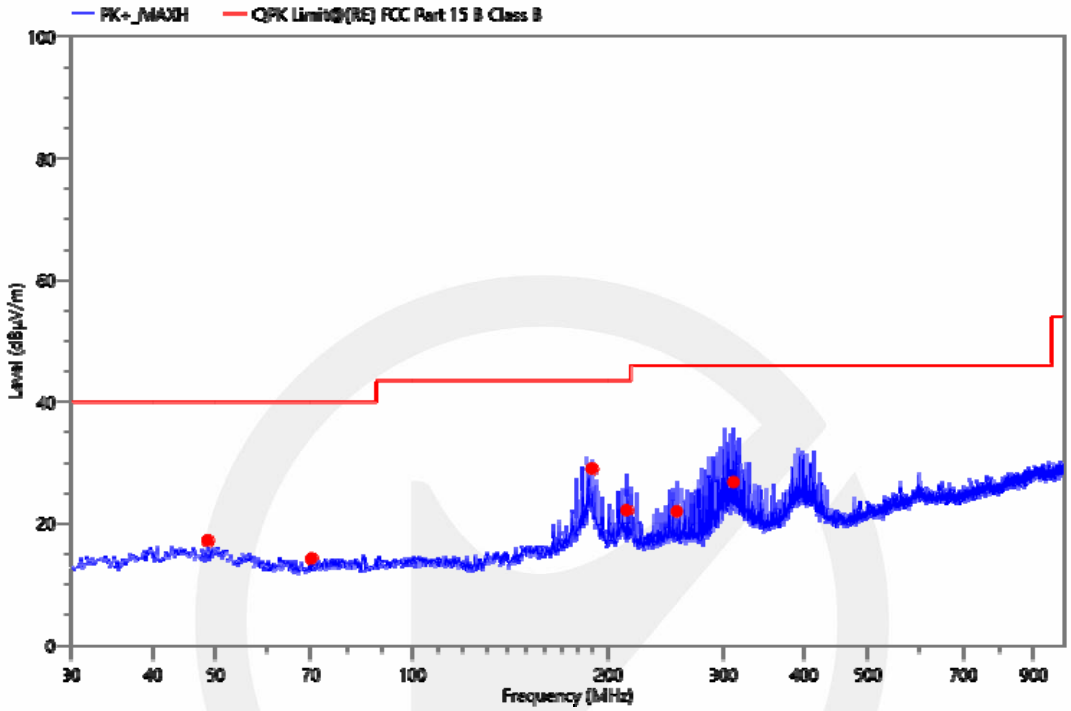

Freq. (MHz)	Reading (dBµV)	Meas. (dBµV/m)	Limit (dBµV/m)	Margin (dB)	Det.	Height (cm)	Pol.	Azimuth (deg)	Corr. (dB)	Verdict
48.624	41.34	17.21	40.00	22.79	QPK	100	H	93.8	-24.13	PASS
70.158	41.27	14.23	40.00	25.77	QPK	200	H	169.3	-27.04	PASS
189.274	54.53	28.99	43.50	14.51	QPK	100	H	270.6	-25.54	PASS
213.330	46.45	22.14	43.50	21.36	QPK	100	H	285.7	-24.31	PASS
255.234	44.68	21.95	46.00	24.05	QPK	100	H	261.8	-22.73	PASS
311.203	48.51	26.76	46.00	19.24	QPK	100	H	282.5	-21.75	PASS

8.6 CONDUCTED EMISSIONS TEST

8.6.1 Applicable Standard

According to FCC Part 15.207(a)

8.6.2 Conformance Limit

Conducted Emission Limit

Frequency(MHz)	Quasi-peak	Average
0.15-0.5	66-56	56-46
0.5-5.0	56	46
5.0-30.0	60	50

Note: 1. The lower limit shall apply at the transition frequencies
2. The limit decreases in line with the logarithm of the frequency in the range of 0.15 to 0.50MHz.

8.6.3 Test Configuration

Test according to clause 7.3conducted emission test setup

8.6.4 Test Procedure

The EUT was placed on a table which is 0.8m above ground plane.
Maximum procedure was performed on the highest emissions to ensure EUT compliance.
Repeat above procedures until all frequency measured were complete.

8.6.5 Test Results

Pass
All modes 2.4G 802.11b/g/n have been tested, and the worst result 802.11b recorded was report as below:

Project Information			
Mode:	TX2412	Voltage:	AC 24V/60Hz
Environment:	Temp: 23℃; Humi:75%	Engineer:	Kerwin Guo

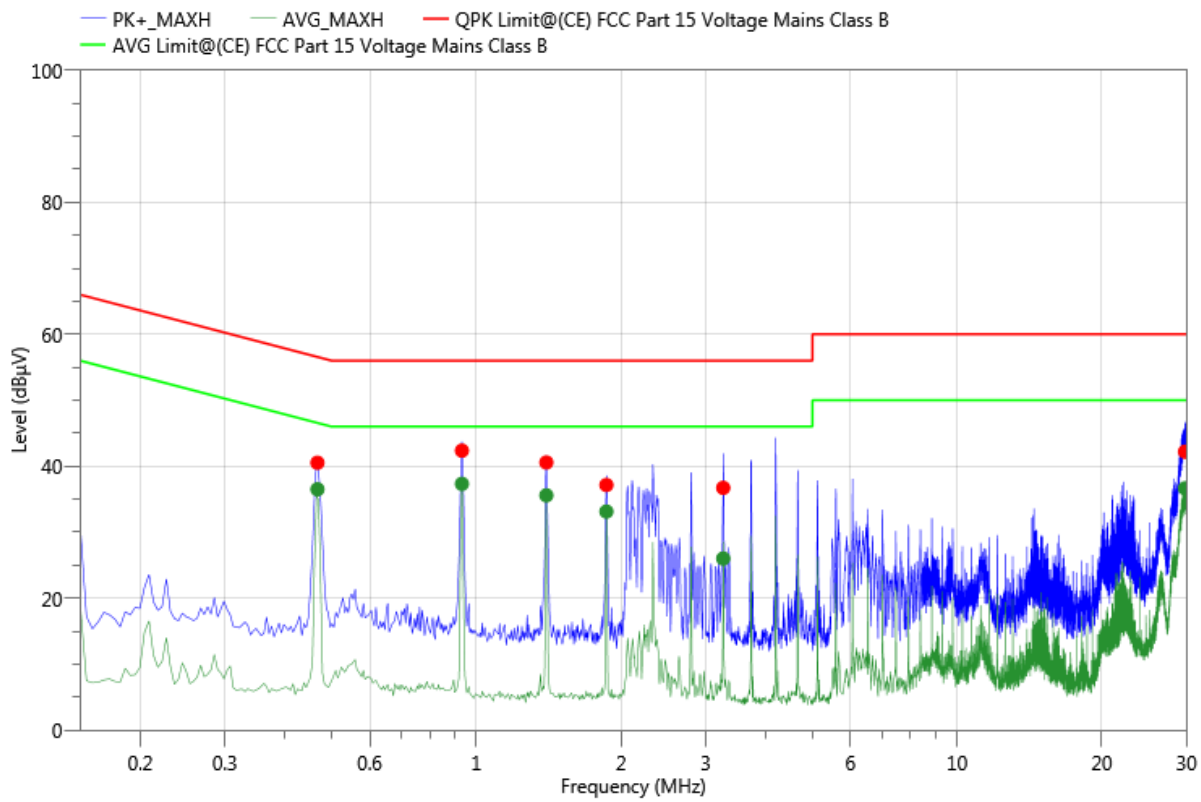

Freq. (MHz)	Reading (dBµV)	Meas. (dBµV)	Limit (dBµV)	Margin (dB)	Det.	Line	Corr. (dB)	Verdict
0.467	30.86	40.53	56.57	16.04	QPK	N	9.67	PASS
0.467	26.83	36.50	46.57	10.07	AVG	N	9.67	PASS
0.933	32.60	42.36	56.00	13.64	QPK	N	9.76	PASS
0.933	27.57	37.33	46.00	8.67	AVG	N	9.76	PASS
1.398	30.81	40.57	56.00	15.43	QPK	N	9.76	PASS
1.398	25.83	35.59	46.00	10.41	AVG	N	9.76	PASS
1.864	27.44	37.15	56.00	18.85	QPK	N	9.71	PASS
1.864	23.42	33.13	46.00	12.87	AVG	N	9.71	PASS
3.261	26.95	36.72	56.00	19.28	QPK	N	9.77	PASS
3.261	16.23	26.00	46.00	20.00	AVG	N	9.77	PASS
29.791	31.90	42.20	60.00	17.80	QPK	N	10.3	PASS
29.791	26.36	36.66	50.00	13.34	AVG	N	10.3	PASS

Project Information			
Mode:	TX2412	Voltage:	AC 24V/60Hz
Environment:	Temp: 23℃; Humi:75%	Engineer:	Kerwin Guo

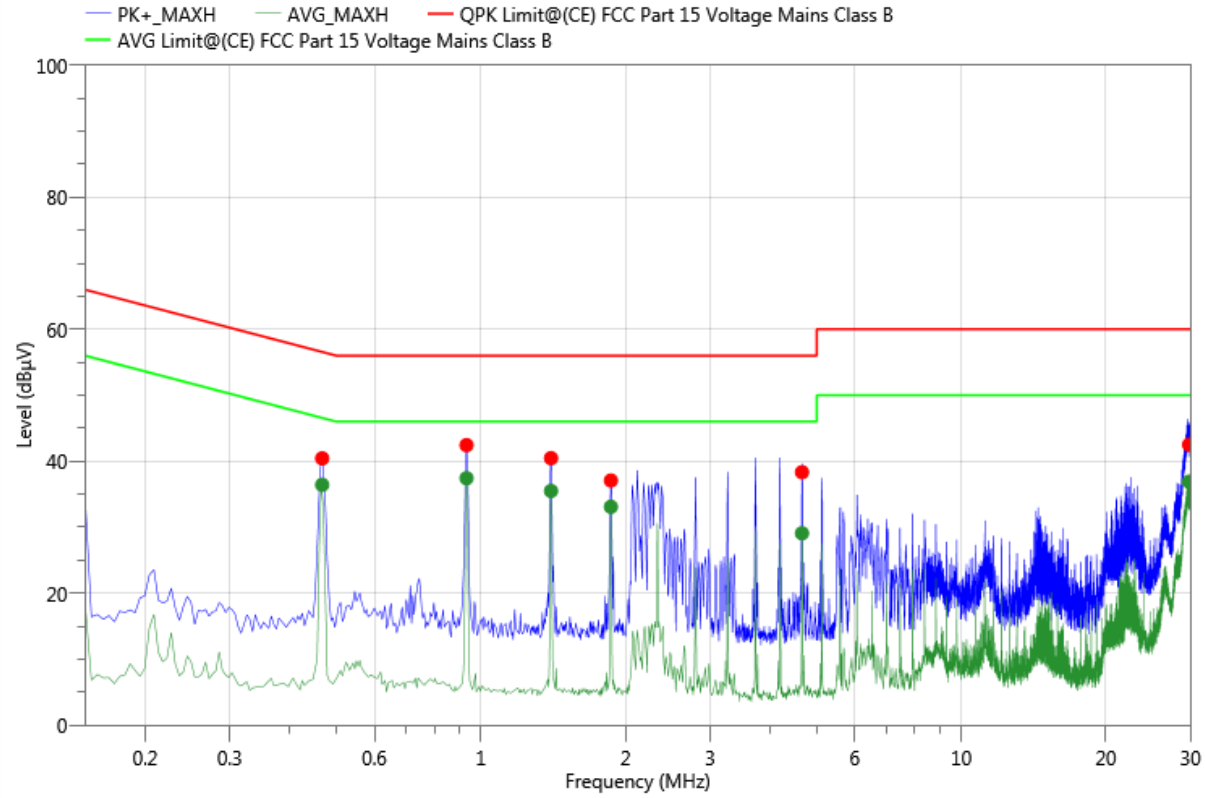

Freq. (MHz)	Reading (dBµV)	Meas. (dBµV)	Limit (dBµV)	Margin (dB)	Det.	Line	Corr. (dB)	Verdict
0.467	30.74	40.43	56.57	16.14	QPK	L1	9.69	PASS
0.467	26.73	36.42	46.57	10.15	AVG	L1	9.69	PASS
0.933	32.67	42.44	56.00	13.56	QPK	L1	9.77	PASS
0.933	27.65	37.42	46.00	8.58	AVG	L1	9.77	PASS
1.399	30.73	40.46	56.00	15.54	QPK	L1	9.73	PASS
1.399	25.76	35.49	46.00	10.51	AVG	L1	9.73	PASS
1.864	27.39	37.08	56.00	18.92	QPK	L1	9.69	PASS
1.864	23.40	33.09	46.00	12.91	AVG	L1	9.69	PASS
4.658	28.56	38.33	56.00	17.67	QPK	L1	9.77	PASS
4.658	19.31	29.08	46.00	16.92	AVG	L1	9.77	PASS
29.786	32.24	42.51	60.00	17.49	QPK	L1	10.27	PASS
29.786	26.63	36.90	50.00	13.10	AVG	L1	10.27	PASS

8.7 ANTENNA APPLICATION

8.7.1 Antenna Requirement

Standard	Requirement
FCC CRF Part15.203	An intentional radiator shall be designed to ensure that no antenna other than that furnished by the responsible party shall be used with the device. The use of a permanently attached antenna or of an antenna that uses a unique coupling to the intentional radiator shall be considered sufficient to comply with the provisions of this section. The manufacturer may design the unit so that a broken antenna can be replaced by the user, but the use of a standard antenna jack or electrical connector is prohibited. This requirement does not apply to carrier current devices or to devices operated under the provisions of §15.211, §15.213, §15.217,§15.219, or §15.221. Further, this requirement does not apply to intentional radiators that must be professionally installed, such as perimeter protection systems and some field disturbance sensors, or to other intentional radiators which, in accordance with §15.31(d), must be measured at the installation site. However, the installer shall be responsible for ensuring that the proper antenna is employed so that the limits in this part are not exceeded.

For intentional device, according to FCC 47 CFR Section 15.203, an intentional radiator shall be designed to ensure that no antenna other than that furnished by the responsible party shall be used with the device. And according to FCC 47 CFR Section 15.247 (b), if transmitting antennas of directional gain greater than 6dBi are used, the power shall be reduced by the amount in dB that the directional gain of the antenna exceeds 6dBi.

8.7.2 Result

PASS.

The EUT has 1 antenna: one is a PCB Antenna for WIFI 2.4G, the gain is 3.37 dBi;

Note: ☒ Antenna uses a permanently attached antenna which is not replaceable.
☐ Not using a standard antenna jack or electrical connector for antenna replacement
☐ The antenna has to be professionally installed (please provide method of installation)

Which in accordance to section 15.203, please refer to the internal photos.

*** End of Report ***

声 明
Statement

1. 本报告无授权批准人签字及“检验检测专用章”无效；
   This report will be void without authorized signature or special seal for testing report.

2. 未经许可本报告不得部分复制；
   This report shall not be copied partly without authorization.

3. 本报告的检测结果仅对送测样品有效，委托方对样品的代表性和资料的真实性负责；
   The test results or observations are applicable only to tested sample. Client shall be responsible for representativeness of the sample and authenticity of the material.

4. 本检测报告中检测项目标注有特殊符号则该项目不在资质认定范围内，仅作为客户委托、科研、教学或内部质量控制等目的使用；
   The observations or tests with special mark fall outside the scope of accreditation, and are only used for purpose of commission, research, training, internal quality control etc.

5. 本检测报告以实测值进行符合性判定，未考虑不确定度所带来的风险，本实验室不承担相关责任，特别约定、标准或规范中有明确规定的除外；
   The test results or observations are provided in accordance with measured value, without taking risks caused by uncertainty into account. Without explicit stipulation in special agreements, standards or regulations, EMTEK shall not assume any responsibility.

6. 对本检测报告若有异议，请于收到报告之日起 20 日内提出；
   Objections shall be raised within 20 days from the date receiving the report.