TEST REPORT

Product Name	:	Combo Smoke/CO Alarm
Model Number	:	GS886F, GS886F-C
FCC ID	:	2ASYYMD5640

Prepared for	:	Siterwell Electronics Co., Limited
Address	:	No.666 Qingfeng Road, Jiangbei District, Ningbo, Zhejiang, China
Prepared by	:	EMTEK (NINGBO) CO., LTD.
Address	:	1F Building 4, 1177#, Lingyun Road, Ningbo National Hi-Tech Zone, Ningbo, Zhejiang, China. Tel: +86-574-27907998 Fax: +86-574-27721538

Report Number	:	ENB2110300002W00201R
Date(s) of Tests	:	October 30, 2021 to November 18, 2021
Date of Issue	:	November 20, 2021

Table of Contents

1 TEST RESULT CERTIFICATION 3

2 EUT TECHNICAL DESCRIPTION 5

3 SUMMARY OF TEST RESULT 6

4 TEST METHODOLOGY 7

4.1 GENERAL DESCRIPTION OF APPLIED STANDARDS 7
4.2 MEASUREMENT EQUIPMENT USED 7
4.3 DESCRIPTION OF TEST MODES 8
4.4 TEST SOFTWARE 8

5 FACILITIES AND ACCREDITATIONS 9

5.1 FACILITIES 9
5.2 LABORATORY ACCREDITATIONS AND LISTINGS 9

6 TEST SYSTEM UNCERTAINTY 10

7 SETUP OF EQUIPMENT UNDER TEST 11

7.1 RADIO FREQUENCY TEST SETUP 1 11
7.2 RADIO FREQUENCY TEST SETUP 2 11
7.3 CONDUCTED EMISSION TEST SETUP 13
7.4 SUPPORT EQUIPMENT 13

8 TEST REQUIREMENTS 14

8.1 BANDWIDTH TEST 14
8.2 RADIATED SPURIOUS EMISSION 16
8.3 CONDUCTED EMISSIONS TEST 26
8.4 ANTENNA APPLICATION 29

1 TEST RESULT CERTIFICATION

Applicant	:	Siterwell Electronics Co., Limited
Address	:	No.666 Qingfeng Road, Jiangbei District, Ningbo, Zhejiang, China
Manufacturer	:	Siterwell Electronics Co., Limited
Address	:	No.666 Qingfeng Road, Jiangbei District, Ningbo, Zhejiang, China
EUT	:	Combo Smoke/CO Alarm
Model Name	:	GS886F, GS886F-C
Trademark	:	N/A

Measurement Procedure Used:

APPLICABLE STANDARDS	
STANDARD	**TEST RESULT**
FCC 47 CFR Part 2, Subpart J FCC 47 CFR Part 15, Subpart C	**PASS**

The above equipment was tested by EMTEK (NINGBO) CO., LTD. The test data, data evaluation, test procedures, and equipment configurations shown in this report were made in accordance with the procedures given in ANSI C63.10 (2013) and the energy emitted by the sample EUT tested as described in this report is in compliance with the requirements of FCC Rules Part 2 and Part 15.249

The test results of this report relate only to the tested sample identified in this report.

Date of Test : October 30, 2021 to November 18, 2021

Prepared by : June Gao/Engineer

Reviewer : Vinay/Supervisor

Approved & Authorized Signer : Tony Wei/Manager

Modified History

Version	Report No.	Revision Date	Summary
/	ENB2110300002W00201R	/	Original Report

2 EUT TECHNICAL DESCRIPTION

Product:	Combo Smoke/CO Alarm
Model Number:	GS886F, GS886F-C (Note: The two models differ only in appearance. PCB schematics are the same. We chose GS886F for RF test)
Sample Number:	1#
Power Supply:	AC 120V,60Hz;DC 3V for Battery
Test Voltage:	AC 120V,60Hz
Modulation:	FSK
Frequency Range:	915.3 MHz
Max Transmit Power:	92.40 dBuV/m
Antenna:	Spring-loaded Antenna
Antenna Gain:	2.0 dBi
Temperature Range:	-20°C ~ 50°C
Date of Receiver:	October 30, 2021

Note: for more details, please refer to the user's manual of the EUT.

3 SUMMARY OF TEST RESULT

FCC Part Clause	Test Parameter	Verdict	Remark
15.207	Conducted Emission	PASS	
15.209	Radiated Emission	PASS	
15.249	Radiated Spurious Emission	PASS	
15.249	Band edge test	PASS	
15.249	20dB Bandwidth	PASS	
15.203	Antenna Requirement	PASS	

NOTE1: N/A is an abbreviation for not applicable
NOTE2: The report use radiated measurements in the restricted frequency bands. In addition, the radiated test is also performed to ensure the emissions emanating from the device cabinet also comply with the applicable limits.

RELATED SUBMITTAL(S) / GRANT(S):
This submittal(s) (test report) is intended for FCC ID: 2ASYYMD5640 filing to comply with Section 15.249 of the FCC Part 15, Subpart C Rules.

4 TEST METHODOLOGY

4.1 GENERAL DESCRIPTION OF APPLIED STANDARDS

According to its specifications, the EUT must comply with the requirements of the following standards:
FCC 47 CFR Part 2, Subpart J
FCC 47 CFR Part 15, Subpart C

4.2 MEASUREMENT EQUIPMENT USED

4.2.1 Conducted Emission Test Equipment

EQUIPMENT TYPE	MFR	MODEL NUMBER	SERIAL NUMBER	LASTCAL.	CAL. INTERVAL
Test Receiver	Rohde & Schwarz	ESCI	101108	July 08, 2021	1 Year
L.I.S.N	Rohde & Schwarz	ENV216	101193	July 08, 2021	1 Year
L.I.S.N	Schwarzbeck	NSLK 8126	8126-462	July 08, 2021	1 Year
Pulse Limiter	MTS-systemtechnik	IMP-136	2611115-001-0033	July 08, 2021	1 Year
RF Switching unit	Compliance Direction Systems Inc.	RSU-M2	38400	July 08, 2021	1 Year

4.2.2 Radiated Emission Test Equipment

EQUIPMENT TYPE	MFR	MODEL NUMBER	SERIAL NUMBER	LAST CAL.	CAL. INTERVAL
Spectrum Analyzer	Rohde & Schwarz	ESCI	101107	July 08, 2021	1 Year
EMI Test Receiver	Rohde & Schwarz	ESCI	101107	July 08, 2021	1 Year
Pre-Amplifier	CD	PAP-0203	22015	July 08, 2021	1 Year
Bilog Antenna	Schwarzbeck	VULB9163	9163-467	July 08, 2021	2 Year
Loop Antenna	Schwarzbeck	FMZB 1519	1519-012	July 08, 2021	1 Year
Cable	HUBER + SUHNER	CBL3-NN-0.5 M	101216-2140500-2	July 08, 2021	1 Year
Cable	HUBER + SUHNER	CBL3-NN-3.0 M	101216-2143000-2	July 08, 2021	1 Year
Cable	HUBER + SUHNER	CBL3-NN-9.0 M	101216-2149000	July 08, 2021	1 Year
Spectrum Analyzer	Agilent	E4407B	MY45107013	April 08, 2021	1 Year
Pre-Amplifier	Connphy Microwave Inc.	GLN-1G40G-4165-K	0319104	July 08, 2021	1 Year
Band Reject Filter	O.M.Jones,Inc.dba	BRM50702-01	G049	July 08, 2021	1 Year
Horn Antenna	Schwarzbeck	BBHA 9120	9120D-707	April 28, 2021	2 Year
Cable	SMAMSMAM	A50-0.5M	N/A	Nov 29, 2020	1 Year
Cable	SMAMSMAM	A50-3M	N/A	Nov 29, 2020	1 Year
Cable	SMAMSMAM	A50-6M	N/A	Nov 29, 2020	1 Year

4.2.3 Radio Frequency Test Equipment

EQUIPMENT TYPE	MFR	MODEL NUMBER	SERIAL NUMBER	LAST CAL.	CAL. INTERVAL
Spectrum Analyzer	Agilent	E4407B	88156318	April 08, 2021	1 Year
Attenuator 10dB	Suzhou talent Microwave	TA10A2-S-18	N/A	July 08, 2021	1 Year

Remark: *Each piece of equipment is scheduled for calibration once a year.*

4.3 DESCRIPTION OF TEST MODES

The EUT has been tested under its typical operating condition.
The EUT configuration for testing is installed on RF field strength measurement to meet the Commissions requirement and operating in a manner which intends to maximize its emission characteristics in a continuous normal application.
The Transmitter was operated in the normal operating mode. The TX frequency was fixed which was for the purpose of the measurements.

Test of channel included the lowest and middle and highest frequency to perform the test, then record on this report.

The EUT has been tested under its typical operating condition so those modulation and channel were used for all test.

Pre-defined engineering program for regulatory testing used to control the EUT for staying in continuous transmitting and receiving mode is programmed.

Frequency and Channel list:

Channel	Frequency (MHz)	Channel	Frequency (MHz)	Channel	Frequency (MHz)
1	915.3	/	/	/	/
Note: N/A					

Test Frequency and Channel list:

Channel	Frequency (MHz)	Channel	Frequency (MHz)	Channel	Frequency (MHz)
1	915.3	/	/	/	/

4.4 TEST SOFTWARE

Item	Software
Radiated Emission:	EMC (Ver. EMEC-3A1)
Conducted Emission	EZ-EMC (Ver. CON-03A1)

5 FACILITIES AND ACCREDITATIONS

5.1 FACILITIES

All measurement facilities used to collect the measurement data are located at

1F Building 4, 1177#, Lingyun Road, Ningbo National Hi-Tech Zone, Ningbo, Zhejiang, China.
The sites are constructed in conformance with the requirements of ANSI C63.7, ANSI C63.10 and CISPR Publication 32.

5.2 LABORATORY ACCREDITATIONS AND LISTINGS

Site Description		
EMC Lab.	:	**Accredited by CNAS** The Certificate Registration Number is L6666. The Laboratory has been assessed and proved to be in compliance with CNAS-CL01:2018 (identical to ISO/IEC 17025:2017) **Accredited by FCC** Designation Number: CN1302 Test Firm Registration Number: 436491 **Accredited by A2LA** The certificate is valid until May 31, 2023 The Certificate Number is 4321.03. **Accredited by Industry Canada** The Certificate Registration Number is CN0114 Company Number: 9469A
Name of Firm	:	EMTEK (NINGBO) CO., LTD.
Site Location	:	1F Building 4, 1177#, Lingyun Road, Ningbo National Hi-Tech Zone, Ningbo, Zhejiang, China.

6 TEST SYSTEM UNCERTAINTY

The following measurement uncertainty levels have been estimated for tests performed on the apparatus:

Parameter	Uncertainty
Radio Frequency	±1x10^-5
Maximum Peak Output Power Test	±1.0dB
Conducted Emissions Test	±2.0dB
Radiated Emission Test	±2.0dB
Occupied Bandwidth Test	±1.0dB
Band Edge Test	±3dB
All emission, radiated	±3dB
Temperature	±0.5℃
Humidity	±3%

Measurement Uncertainty for a level of Confidence of 95%

7 SETUP OF EQUIPMENT UNDER TEST

7.1 RADIO FREQUENCY TEST SETUP 1

The EUT wireless component's antenna ports(s) of the EUT are connected to the measurement instrument per an appropriate attenuator. The EUT is controlled by PC/software to emit the specified signals for the purpose of measurements.

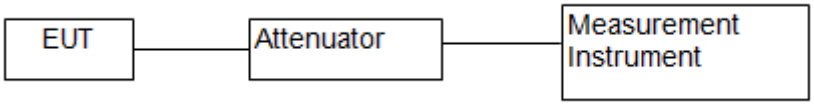

7.2 RADIO FREQUENCY TEST SETUP 2

The test site semi-anechoic chamber has met the requirement of NSA tolerance 4 dB according to the standards: ANSI C63.10. The test distance is 3m.The setup is according to the requirements in Section 13.1.4.1 of ANSI C63.10-2013 and CAN/CSA-CEI/IEC CISPR 32.

Below 30MHz：

The EUT is placed on a turntable 0.8 meters above the ground in the chamber, 3 meter away from the antenna (loop antenna). The Antenna should be positioned with its plane vertical at the specified distance from the EUT and rotated about its vertical axis for maximum response at each azimuth about the EUT. The center of the loop shall be 1 m above the ground. For certain applications, the loop antenna plane may also need to be positioned horizontally at the specified distance from the EUT.

30MHz-1GHz：

The EUT is placed on a turntable 0.8 meters above the ground in the chamber, 3 meter away from the antenna. The maximal emission value is acquired by adjusting the antenna height, polarisation and turntable azimuth. Normally, the height range of antenna is 1 m to 4 m, the azimuth range of turntable is 0° to 360°, and the receive antenna has two polarizations Vertical (V) and Horizontal (H).

Above 1GHz：

The EUT is placed on a turntable 1.5 meters above the ground in the chamber, 3 meter away from the antenna. The maximal emission value is acquired by adjusting the antenna height, polarisation and turntable azimuth. Normally, the height range of antenna is 1 m to 4 m, the azimuth range of turntable is 0° to 360°, and the receive antenna has two polarizations Vertical (V) and Horizontal (H).

(a) Radiated Emission Test Set-Up, Frequency Below 30MHz

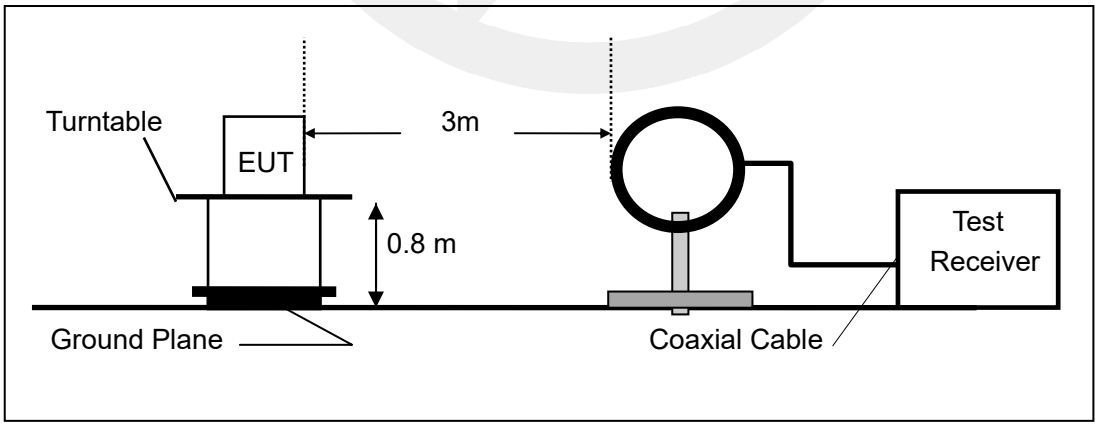

(b) Radiated Emission Test Set-Up, Frequency Below 1000MHz

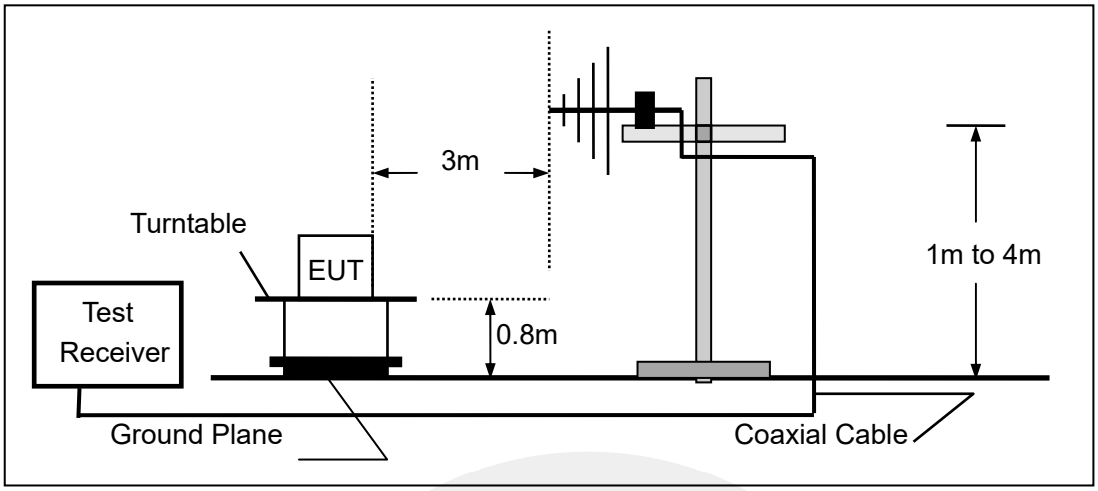

(c) Radiated Emission Test Set-Up, Frequency above 1000MHz

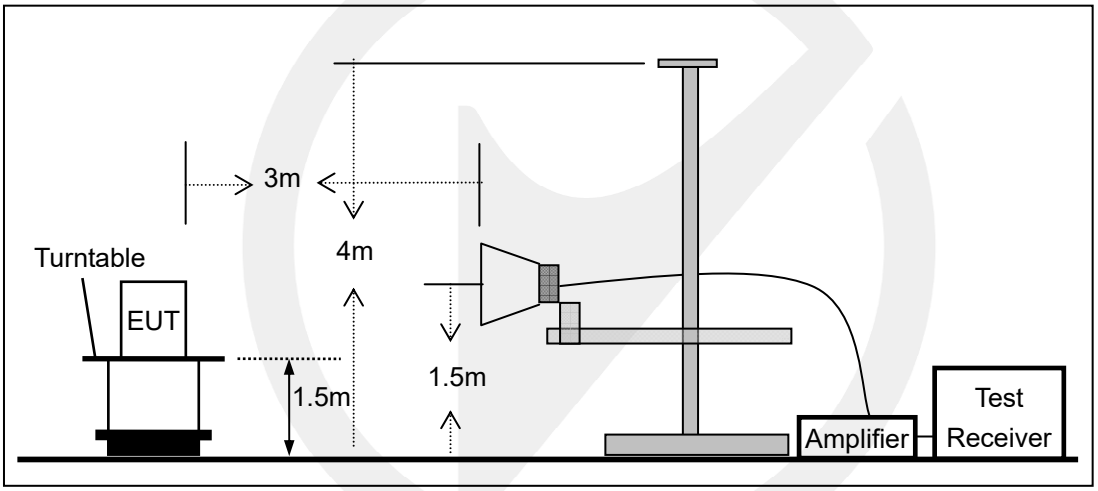

7.3 CONDUCTED EMISSION TEST SETUP

The mains cable of the EUT (maybe per AC/DC Adapter) must be connected to LISN. The LISN shall be placed 0.8 m from the boundary of EUT and bonded to a ground reference plane for LISN mounted on top of the ground reference plane. This distance is between the closest points of the LISN and the EUT. All other units of the EUT and associated equipment shall be at least 0.8m from the LISN.
Ground connections, where required for safety purposes, shall be connected to the reference ground point of the LISN and, where not otherwise provided or specified by the manufacturer, shall be of same length as the mains cable and run parallel to the mains connection at a separation distance of not more than 0.1 m.
According to the requirements in Section 13.1.4.1 of ANSI C63.10-2013 Conducted emissions from the EUT measured in the frequency range between 0.15 MHz and 30 MHz using CISPR Quasi-Peak and average detector mode.

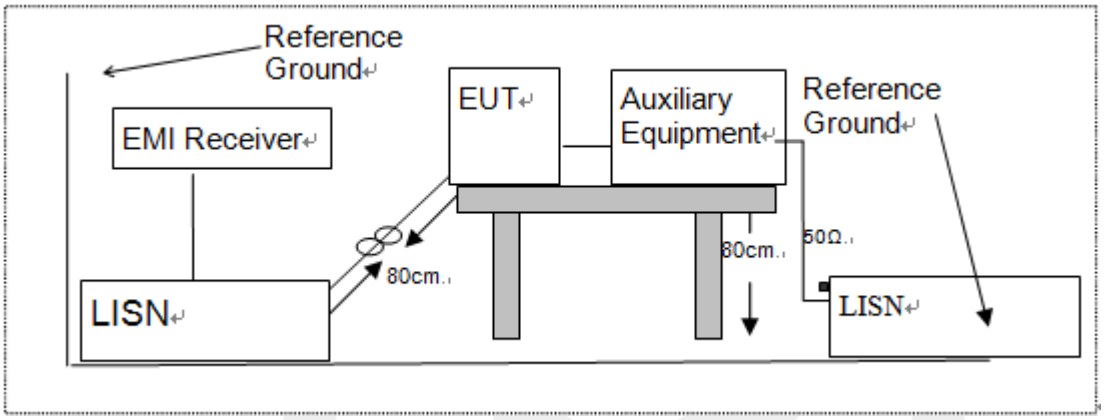

7.4 SUPPORT EQUIPMENT

EUT Cable List and Details			
Cable Description	Length (m)	Shielded/Unshielded	With / Without Ferrite
/	/	/	/

Auxiliary Cable List and Details			
Cable Description	Length (m)	Shielded/Unshielded	With / Without Ferrite
/	/	/	/

Auxiliary Equipment List and Details			
Description	Manufacturer	Model	Serial Number
/	/	/	/

Notes:

1. All the equipment/cables were placed in the worst-case configuration to maximize the emission during the test.
2. Grounding was established in accordance with the manufacturer's requirements and conditions for the intended use.

8 TEST REQUIREMENTS

8.1 BANDWIDTH TEST

8.1.1 Applicable Standard

According to FCC Part 15.249

8.1.2 Conformance Limit

N/A

8.1.3 Test Configuration

Test according to clause 7.1 radio frequency test setup 1

8.1.4 Test Procedure

The EUT was operating in controlled its channel. Printed out the test result from the spectrum by hard copy function.
The RF output of EUT was connected to the spectrum analyzer by RF cable and attenuator. The path loss was compensated to the results for each measurement.
Set to the maximum power setting and enable the EUT transmit continuously
Set RBW ≥ 1% of the 20 dB bandwidth
Set the video bandwidth (VBW) ≥ RBW
Set Span= approximately 2 to 3 times the 20 dB bandwidth
Set Detector = Peak.
Set Trace mode = max hold.
Set Sweep = auto couple.
Measure the maximum width of the emission that is constrained by the frequencies associated with the two outermost amplitude points (upper and lower frequencies) that are attenuated by 20 dB relative to the maximum level measured in the fundamental emission.
Measure and record the results in the test report.

Test Results

Temperature:	26° C
Relative Humidity:	54%
ATM Pressure:	1011 mbar

Operation Mode	Channel Frequency (MHz)	20db Measurement Bandwidth (kHz)	99% Measurement Bandwidth (kHz)	Limit (kHz)	Verdict
FSK	915.3	472.1550	428.9918	N/A	PASS
Note: N/A (Not Applicable).					

Test Model	Occupied Bandwidth Channel : 915.3 MHz

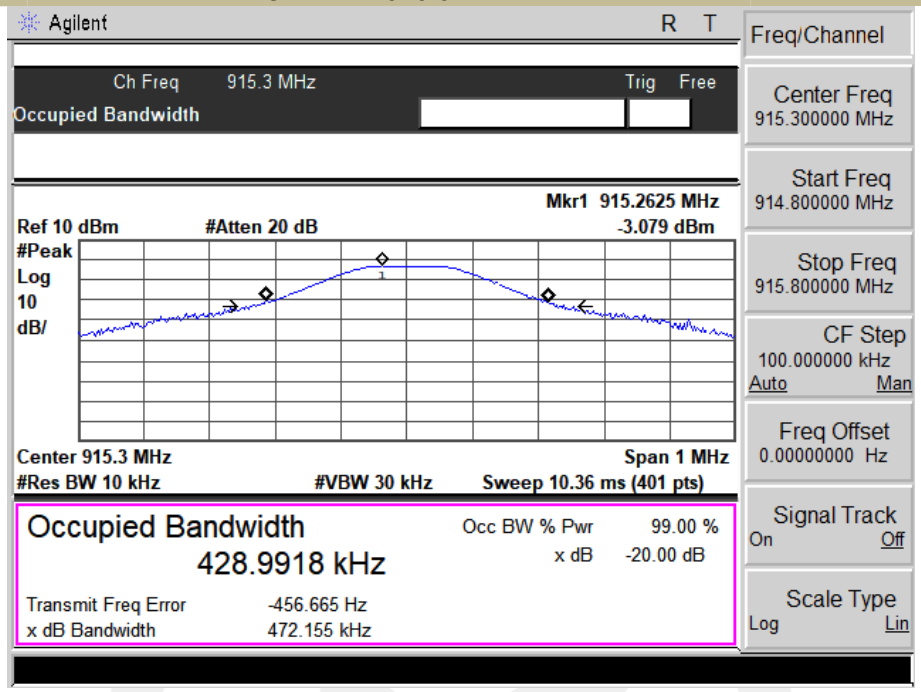

8.2 RADIATED SPURIOUS EMISSION

8.2.1 Applicable Standard

According to FCC Part 15.249 and 15.209

8.2.2 Conformance Limit

According to FCC Part 15.249: radiated emissions which fall in the restricted bands, as defined in §15.205(a), must also comply with the radiated emission limits specified in §15.209(a) (see §15.205(c)).
According to FCC Part15.205, Restricted bands

MHz	MHz	MHz	GHz
0.090-0.110	16.42-16.423	399.9-410	4.5-5.15
10.495-0.505	16.69475-16.69525	608-614	5.35-5.46
2.1735-2.1905	16.80425-16.80475	960-1240	7.25-7.75
4.125-4.128	25.5-25.67	1300-1427	8.025-8.5
4.17725-4.17775	37.5-38.25	1435-1626.5	9.0-9.2
4.20725-4.20775	73-74.6	1645.5-1646.5	9.3-9.5
6.215-6.218	74.8-75.2	1660-1710	10.6-12.7
6.26775-6.26825	123-138	2200-2300	14.47-14.5
8.291-8.294	149.9-150.05	2310-2390	15.35-16.2
8.362-8.366	156.52475-156.52525	2483.5-2500	17.7-21.4
8.37625-8.38675	156.7-156.9	2690-2900	22.01-23.12
8.41425-8.41475	162.0125-167.17	3260-3267	23.6-24.0
12.29-12.293	167.72-173.2	3332-3339	31.2-31.8
12.51975-12.52025	240-285	3345.8-3358	36.43-36.5
12.57675-12.57725	322-335.4	3600-4400	(2)
13.36-13.41			

According to FCC Part15.205, the level of any transmitter spurious emission in Restricted bands shall not exceed the level of the emission specified in the following table

Restricted Frequency(MHz)	Field Strength (μV/m)	Field Strength (dBμV/m)	Measurement Distance
0.009-0.490	2400/F(KHz)	20 log (uV/m)	300
0.490-1.705	24000/F(KHz)	20 log (uV/m)	30
1.705-30	30	29.5	30
30-88	100	40	3
88-216	150	43.5	3
216-960	200	46	3
Above 960	500	54	3

Remark :1. Emission level in dBuV/m=20 log (uV/m)
2. Measurement was performed at an antenna to the closed point of EUT distance of meters.
3. Distance extrapolation factor =40log(Specific distance/ test distance)(dB);
Limit line=Specific limits(dBuV) + distance extrapolation factor.
for the frequency ranges below 30 MHz, a narrower RBW is used for these ranges but the measured value should add a RBW correction factor (RBWCF) where RBWCF [dB] =10*lg(100 [kHz]/narrower RBW [kHz]). , the narrower RBW is 1 kHz and RBWCF is 20 dB for the frequency 9 kHz to 150 kHz, and the narrower RBW is 10 kHz and RBWCF is 10 dB for the frequency 150 kHz to 30 MHz.

Field strength of fundamental and Field strength of harmonics Limit:

Fundamental frequency	Field strength of fundamental (millivolts/meter)	Field strength of harmonics (microvolts/meter)
902-928 MHz	50(94 dBV/m)	500(54 dBV/m)
2400-2483.5 MHz	50(94 dBV/m)	500(54 dBV/m)
5725-5875 MHz	50(94 dBV/m)	500(54 dBV/m)
24.0-24.25 GHz	250(108 dBV/m)	2500(68 dBV/m)

8.2.3 Test Configuration

Test according to clause 7.2 radio frequency test setup 2

8.2.4 Test Procedure

This test is required for any spurious emission that falls in a Restricted Band, as defined in Section 15.205. It must be performed with the highest gain of each type of antenna proposed for use with the EUT. Use the following spectrum analyzer settings:
The EUT was placed on a turn table which is 0.8m above ground plane.
Maximum procedure was performed on the highest emissions to ensure EUT compliance.
Span = wide enough to fully capture the emission being measured
RBW = 1 MHz for f ≥ 1 GHz(1GHz to 25GHz), 100 kHz for f < 1 GHz(30MHz to 1GHz)
VBW ≥ RBW
Sweep = auto
Detector function = peak
Trace = max hold
Follow the guidelines in ANSI C63.10-2013 with respect to maximizing the emission by rotating the EUT, measuring the emission while the EUT is situated in three orthogonal planes (if appropriate), adjusting the measurement antenna height and polarization, etc. A pre-amp and a high pass filter are required for this test, in order to provide the measuring system with sufficient sensitivity. Allow the trace to stabilize. The peak reading of the emission, after being corrected by the antenna factor, cable loss, pre-amp gain, etc., is the peak field strength, which must comply with the limit specified in Section 15.35(b). Submit this data.
Now set the VBW to 10 Hz, while maintaining all of the other instrument settings. This peak level, once corrected, must comply with the limit specified in Section 15.209. If the dwell time per channel of the hopping signal is less than 100 ms, then the reading obtained with the 10 Hz VBW may be further adjusted by a “duty cycle correction factor”, derived from 20log(dwell time/100 ms), in an effort to demonstrate compliance with the 15.209 limit. Submit this data.
Repeat above procedures until all frequency measured was complete.

8.2.5 Test Results

Temperature:	24° C
Relative Humidity:	55%
ATM Pressure:	1011 mbar

■ Spurious Emission below 30MHz (9KHz to 30MHz)

Freq. (MHz)	Ant.Pol. H/V	Emission Level(dBuV/m)		Limit 3m(dBuV/m)		Over(dB)	
		PK	AV	PK	AV	PK	AV
--	--	--	--	--	--	--	--

Note: the amplitude of spurious emission that is attenuated by more than 20dB below the permissible limit has no need to be reported.
Distance extrapolation factor =40log(Specific distance/ test distance)(dB);
Limit line=Specific limits(dBuV) + distance extrapolation factor

■ Field Strength of the fundamental signal

Freq. (MHz)	Ant.Pol. H/V	Emission Level(dBuV/m) QP	Limit 3m(dBuV/m) QP	Over(dB) QP
915.3	V	85.80	94	-8.2
915.3	H	92.40	94	-1.6

Note: (1) Correct Factor= Antenna Factor +Cable Loss- Amplifier Gain
(2) Emission Level= Reading Level+Probe Factor +Cable Loss

Out of Band Emissions

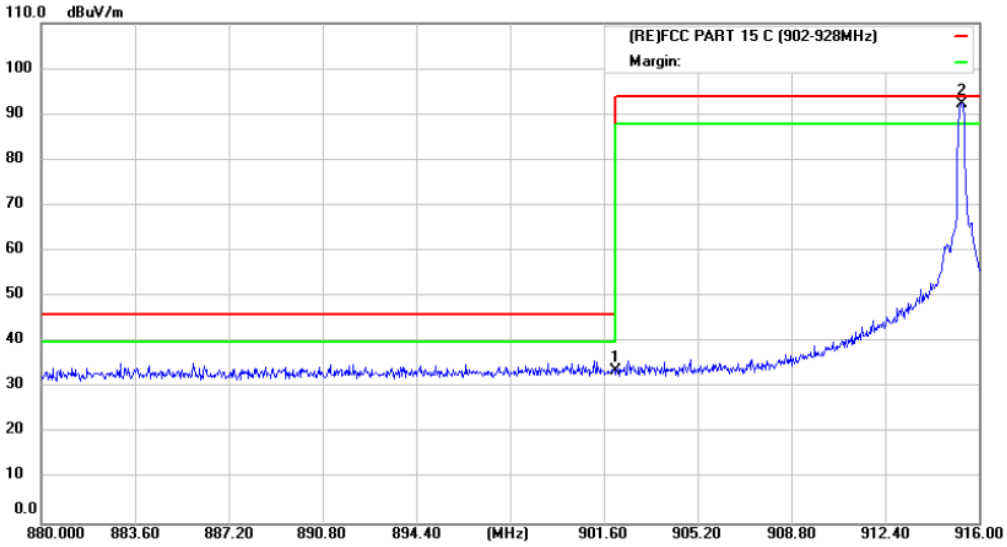

Site Radiated Emission 3m #1 Polarization: ***Horizontal*** Temperature: 24

Limit: (RE)FCC PART 15 C (902-928MHz) Power: AC 120V/60Hz Humidity: 55 %

Mode:TX

Note:

No.	Mk.	Freq.	Reading Level	Correct Factor	Measure-ment	Limit	Over		Antenna Height	Table Degree	
		MHz	dBuV	dB	dBuV/m	dBuV/m	dB	Detector	cm	degree	Comment
1		902.0000	41.80	-8.00	33.80	46.00	-12.20	QP			
2	*	915.3519	100.64	-8.24	92.40	94.00	-1.60	QP			

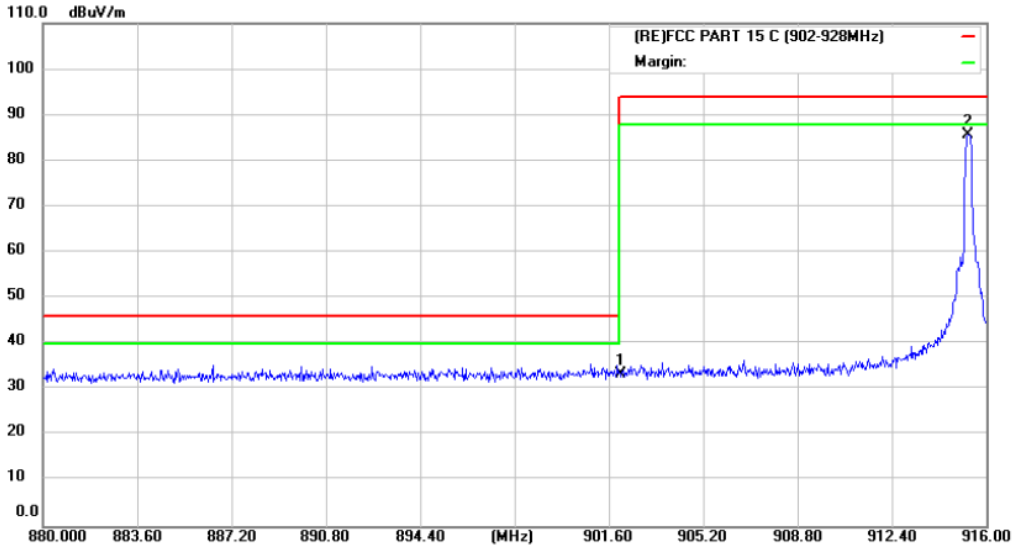

Site Radiated Emission 3m #1 Polarization: ***Vertical*** Temperature: 24

Limit: (RE)FCC PART 15 C (902-928MHz) Power: AC 120V/60Hz Humidity: 55 %

Mode:TX

Note:

No.	Mk.	Freq.	Reading Level	Correct Factor	Measure-ment	Limit	Over		Antenna Height	Table Degree	
		MHz	dBuV	dB	dBuV/m	dBuV/m	dB	Detector	cm	degree	Comment
1		902.0000	41.30	-8.00	33.30	46.00	-12.70	QP			
2	*	915.2800	93.93	-8.23	85.70	94.00	-8.30	QP			

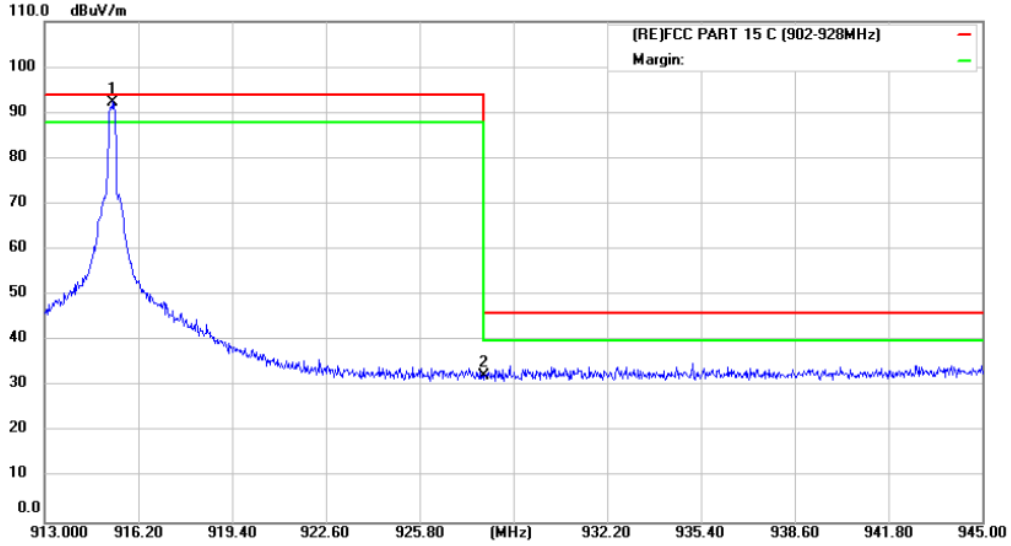

Site Radiated Emission 3m #1 Polarization: ***Horizontal*** Temperature: 24

Limit: (RE)FCC PART 15 C (902-928MHz) Power: AC 120V/60Hz Humidity: 55 %

Mode:TX

Note:

No.	Mk.	Freq.	Reading Level	Correct Factor	Measure-ment	Limit	Over		Antenna Height	Table Degree	
		MHz	dBuV	dB	dBuV/m	dBuV/m	dB	Detector	cm	degree	Comment
1	*	915.3360	100.64	-8.24	92.10	94.00	-1.90	QP			
2		928.0000	41.39	-8.98	32.41	46.00	-13.59	QP			

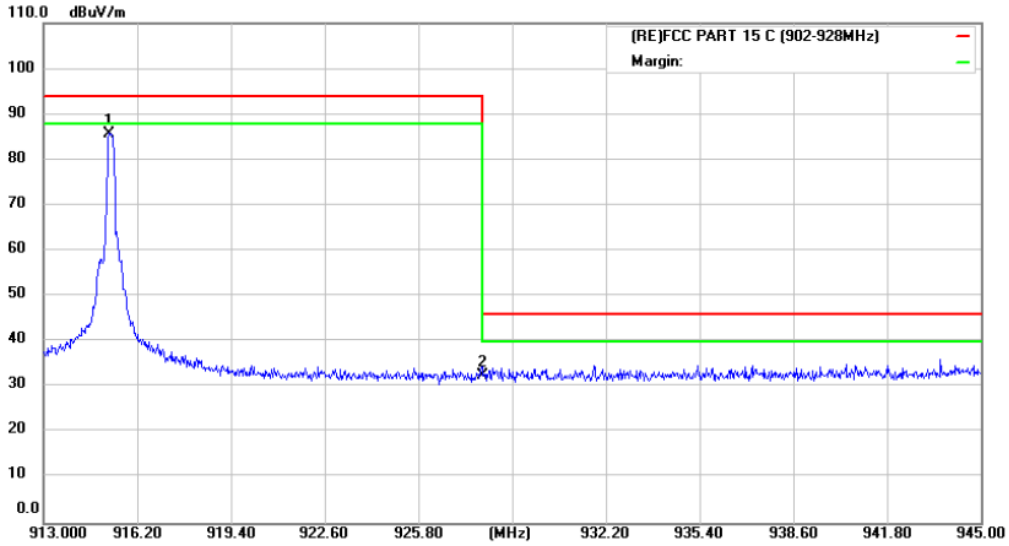

Site Radiated Emission 3m #1 Polarization: ***Vertical*** Temperature: 24

Limit: (RE)FCC PART 15 C (902-928MHz) Power: AC 120V/60Hz Humidity: 55 %

Mode:TX

Note:

No.	Mk.	Freq.	Reading Level	Correct Factor	Measure-ment	Limit	Over		Antenna Height	Table Degree	
		MHz	dBuV	dB	dBuV/m	dBuV/m	dB	Detector	cm	degree	Comment
1	*	915.2400	94.03	-8.23	85.80	94.00	-8.20	QP			
2		928.0000	41.58	-8.98	32.60	46.00	-13.40	QP			

■ Spurious Emission below 1GHz (30MHz to 1GHz)

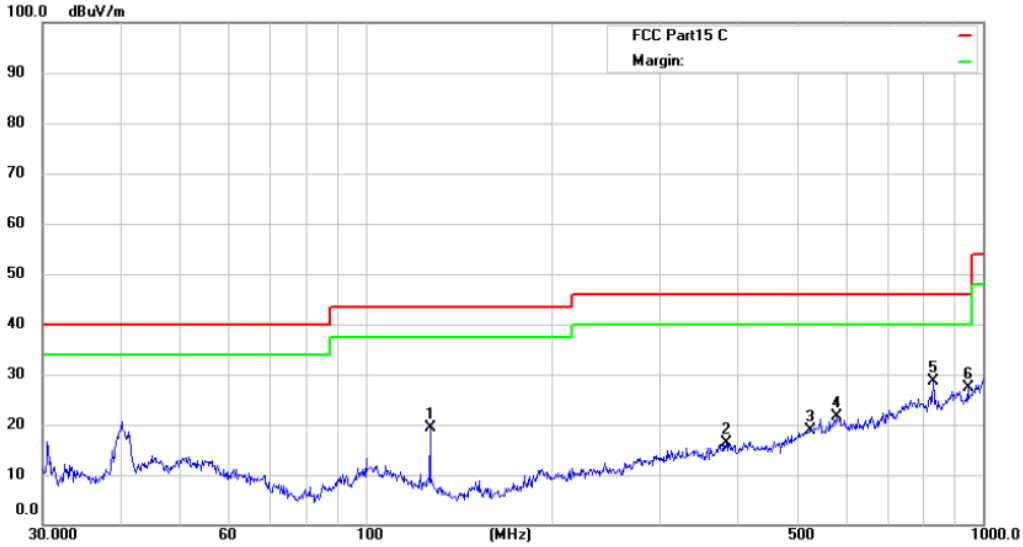

Site Radiated Emission 3m #1 Polarization: ***Horizontal*** Temperature: 24

Limit: FCC Part15 C Power: AC 120V/60Hz Humidity: 55 %

Mode:TX

Note:

No.	Mk.	Freq.	Reading Level	Correct Factor	Measure-ment	Limit	Over		Antenna Height	Table Degree	
		MHz	dBuV	dB	dBuV/m	dBuV/m	dB	Detector	cm	degree	Comment
1		127.2176	45.27	-25.97	19.30	43.50	-24.20	QP			
2		383.9318	34.53	-18.13	16.40	46.00	-29.60	QP			
3		524.5541	33.47	-14.67	18.80	46.00	-27.20	QP			
4		578.6700	34.52	-12.92	21.60	46.00	-24.40	QP			
5	*	830.4001	38.32	-9.62	28.70	46.00	-17.30	QP			
6		945.4400	35.96	-8.46	27.50	46.00	-18.50	QP			

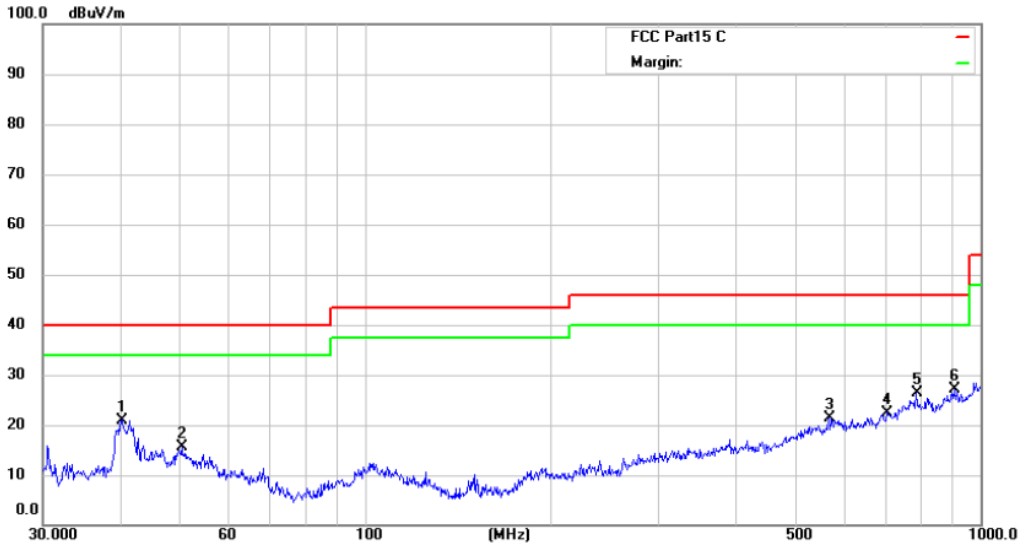

Site Radiated Emission 3m #1 Polarization: ***Vertical*** Temperature: 24

Limit: FCC Part15 C Power: AC 120V/60Hz Humidity: 55 %

Mode:TX

Note:

No.	Mk.	Freq.	Reading Level	Correct Factor	Measure-ment	Limit	Over		Antenna Height	Table Degree	
		MHz	dBuV	dB	dBuV/m	dBuV/m	dB	Detector	cm	degree	Comment
1		40.2757	43.02	-22.02	21.00	40.00	-19.00	QP			
2		50.4089	36.49	-20.79	15.70	40.00	-24.30	QP			
3		566.6223	35.25	-13.85	21.40	46.00	-24.60	QP			
4		704.2261	34.43	-11.93	22.50	46.00	-23.50	QP			
5		785.0935	35.92	-9.62	26.30	46.00	-19.70	QP			
6	*	906.4824	34.89	-7.79	27.10	46.00	-18.90	QP			

■ Spurious Emission Above 1GHz (1GHz to 25GHz)

Test mode: FSK Frequency: Channel : 915.3 MHz

Freq. (MHz)	Ant.Pol. H/V	Emission Level(dBuV/m) PK	Emission Level(dBuV/m) AV	Limit 3m(dBuV/m) PK	Limit 3m(dBuV/m) AV	Over(dB) PK	Over(dB) AV
7521.492	V	55.11	42.94	74	54	-18.89	-11.06
9617.194	V	57.51	43.65	74	54	-16.49	-10.35
10830.49	V	61.00	49.75	74	54	-13.00	-4.25
5232.766	H	52.18	40.03	74	54	-21.82	-13.97
7080.292	H	54.12	41.39	74	54	-19.88	-12.61
8831.306	H	55.63	43.76	74	54	-18.37	-10.24

Note: (1) All Readings are Peak Value (VBW=3MHz) and Average Value (VBW=10Hz).
(2) Emission Level= Reading Level+Correct Factor +Cable Loss.
(3) Correct Factor= Ant_F + Cab_L - Preamp
(4) The reading of emissions are attenuated more than 20dB below the permissible limits or the field strength is too small to be measured.

8.3 CONDUCTED EMISSIONS TEST

8.3.1 Applicable Standard

According to FCC Part 15.207(a)

8.3.2 Conformance Limit

Conducted Emission Limit		
Frequency(MHz)	Quasi-peak	Average
0.15-0.5	66-56	56-46
0.5-5.0	56	46
5.0-30.0	60	50

Note: 1. The lower limit shall apply at the transition frequencies
2. The limit decreases in line with the logarithm of the frequency in the range of 0.15 to 0.50MHz.

8.3.3 Test Configuration

Test according to clause 7.3 conducted emission test setup

8.3.4 Test Procedure

The EUT was placed on a table which is 0.8m above ground plane.
Maximum procedure was performed on the highest emissions to ensure EUT compliance.
Repeat above procedures until all frequency measured were complete.

8.3.5 Test Results

Pass.

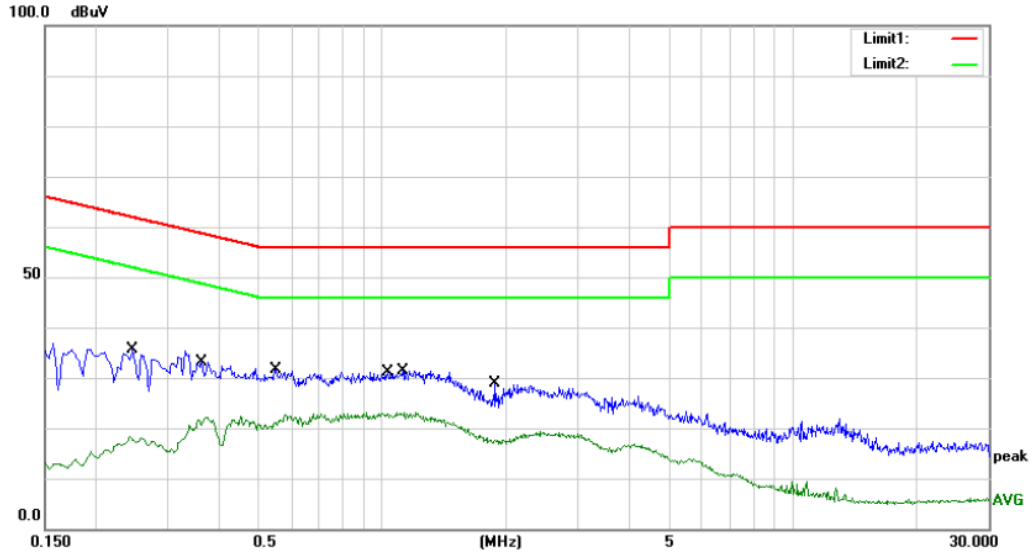

Site site #1 Phase: *L1* Temperature: 24

Limit: (CE)FCC PART 15.207 Power: AC 120V/60Hz Humidity: 50 %

Mode: TX

Note:

No.	Mk.	Freq.	Reading Level	Correct Factor	Measure-ment	Limit	Over		
		MHz	dBuV	dB	dBuV	dBuV	dB	Detector	Comment
1		0.2460	25.40	10.09	35.49	61.89	-26.40	QP	
2		0.2460	7.50	10.09	17.59	51.89	-34.30	AVG	
3		0.3620	23.10	10.08	33.18	58.68	-25.50	QP	
4		0.3620	10.50	10.08	20.58	48.68	-28.10	AVG	
5		0.5500	21.50	10.06	31.56	56.00	-24.44	QP	
6		0.5500	11.00	10.06	21.06	46.00	-24.94	AVG	
7		1.0300	21.20	9.99	31.19	56.00	-24.81	QP	
8	*	1.0300	12.80	9.99	22.79	46.00	-23.21	AVG	
9		1.1220	21.40	10.00	31.40	56.00	-24.60	QP	
10		1.1220	12.60	10.00	22.60	46.00	-23.40	AVG	
11		1.8860	18.70	10.10	28.80	56.00	-27.20	QP	
12		1.8860	7.40	10.10	17.50	46.00	-28.50	AVG	

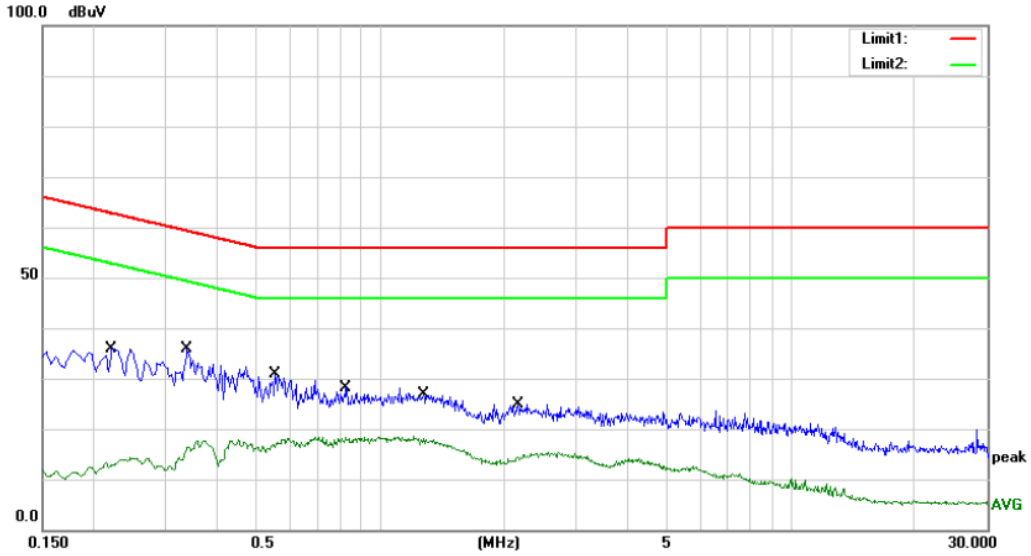

Site site #1 Phase: N Temperature: 24

Limit: (CE)FCC PART 15.207 Power: AC 120V/60Hz Humidity: 50 %

Mode: TX

Note:

No.	Mk.	Freq.	Reading Level	Correct Factor	Measure-ment	Limit	Over		
		MHz	dBuV	dB	dBuV	dBuV	dB	Detector	Comment
1		0.2220	25.80	10.08	35.88	62.74	-26.86	QP	
2		0.2220	2.60	10.08	12.68	52.74	-40.06	AVG	
3	*	0.3380	25.60	10.09	35.69	59.25	-23.56	QP	
4		0.3380	6.20	10.09	16.29	49.25	-32.96	AVG	
5		0.5540	20.80	10.08	30.88	56.00	-25.12	QP	
6		0.5540	6.30	10.08	16.38	46.00	-29.62	AVG	
7		0.8220	18.10	9.95	28.05	56.00	-27.95	QP	
8		0.8220	8.30	9.95	18.25	46.00	-27.75	AVG	
9		1.2740	17.00	9.88	26.88	56.00	-29.12	QP	
10		1.2740	8.10	9.88	17.98	46.00	-28.02	AVG	
11		2.1620	14.80	9.94	24.74	56.00	-31.26	QP	
12		2.1620	4.50	9.94	14.44	46.00	-31.56	AVG	

8.4 ANTENNA APPLICATION

8.4.1 Antenna Requirement

Standard	Requirement
FCC CRF Part 15.203	An intentional radiator shall be designed to ensure that no antenna other than that furnished by the responsible party shall be used with the device. The use of a permanently attached antenna or of an antenna that uses a unique coupling to the intentional radiator shall be considered sufficient to comply with the provisions of this section. The manufacturer may design the unit so that a broken antenna can be replaced by the user, but the use of a standard antenna jack or electrical connector is prohibited. This requirement does not apply to carrier current devices or to devices operated under the provisions of §15.211, §15.213, §15.217, §15.219, or §15.221. Further, this requirement does not apply to intentional radiators that must be professionally installed, such as perimeter protection systems and some field disturbance sensors, or to other intentional radiators which, in accordance with §15.31(d), must be measured at the installation site. However, the installer shall be responsible for ensuring that the proper antenna is employed so that the limits in this part are not exceeded.

For intentional device, according to FCC 47 CFR Section 15.203, an intentional radiator shall be designed to ensure that no antenna other than that furnished by the responsible party shall be used with the device.

8.4.2 Result

PASS.

The EUT have a Internal Antenna: The Internal Antenna gain is 2.0 dBi.

Note:
- ☒ Antenna use a permanently attached antenna which is not replaceable.
- ☐ Not using a standard antenna jack or electrical connector for antenna replacement
- ☐ The antenna has to be professionally installed (please provide method of installation)

which in accordance to section 15.203, please refer to the internal photos.

*** End of Report ***

声 明
Statement

1. 本报告无授权批准人签字及“检验报告专用章”无效；
   This report will be void without authorized signature or special seal for testing report.

2. 未经许可本报告不得部分复制；
   This report shall not be copied partly without authorization.

3. 本报告的检测结果仅对送测样品有效，委托方对样品的代表性和资料的真实性负责；
   The test results or observations are applicable only to tested sample. Client shall be responsible for representativeness of the sample and authenticity of the material.

4. 本检测报告中检测项目标注有特殊符号则该项目不在资质认定范围内，仅作为客户委托、科研、教学或内部质量控制等目的使用；
   The observations or tests with special mark fall outside the scope of accreditation, and are only used for purpose of commission, research, training, internal quality control etc.

5. 本检测报告以实测值进行符合性判定，未考虑不确定度所带来的风险，本实验室不承担相关责任，特别约定、标准或规范中有明确规定的除外；
   The test results or observations are provided in accordance with measured value, without taking risks caused by uncertainty into account. Without explicit stipulation in special agreements, standards or regulations, EMTEK shall not assume any responsibility.

6. 对本检测报告若有异议，请于收到报告之日起 20 日内提出；
   Objections shall be raised within 20 days from the date receiving the report.