varioprop UNO

S2R

2.4GHZ DIGITAL
RADIO CONTROL SYSTEM

ADVANCED FHSS RADIO
CONTROL SYSTEM

INSTRUCTION MANUAL

WARNING and SAFETY PRECAUTION

The following terms are used throughout the product literature to indicate various levels of potential harm when operating this product.

CAUTION: Procedures, which if not be properly followed, is able to create a possibility of physical property damage AND or possibility of injury.

ATTENTION: Read the ENTIRE instruction manual to become familiar with the features of the product before operating. Fail to operate the product correctly can result in damage to the product, personal property and cause serious injury.

ATTENTION: This is a sophisticated hobby product and NOT a toy. It must be operated with caution and common sense and requires some basic mechanical ability. Fail to operate this Product in a safe and responsible manner could result in injury or damage to the product or other property. This product is not intended for use by children without direct adult supervision. Do not attempt to disassemble, use with incompatible components or augment product in any way without the approval of **Varioprop**. This manual contains instructions for safety, operation and maintenance. It is essential to read and follow all the instructions and warnings in the manual, prior to assembly, setup or use, in order to operate correctly and avoid damage or serious injury.

Age Recommendation: Not for Children under 14 years. This is not a toy.

SPECIFICATIONS

- 2CH Transmitter with 2-channel S2R receiver.
- The device has an integrated 2.4GHz antenna.
- 7: 3 and 5: 5 Throttle regulator, reverse switches for throttle and steering.
- Steering DUAL RATE (D/R).
- Steering and throttle trims.
- Individual programmable Servo End Point Adjustment (EPA).
- Programmable Fail Safe Function (CH 1 & 2)

Model Type: . . . . . Car/Boat
Battery required: . . . . . AA * 4pcs
RF power: . . . . . <20dBm
2.4GHz system: . . . . . FHSS
Fail safe function: . . . . . Included
END POINT: . . . . . Programmable
Range: 300m
TX Channels: 2-CH
RX Channels: 2-CH
RX Channels: 2-CH
Certificate: . . . . . CE, FCC

NOMENCLATURE

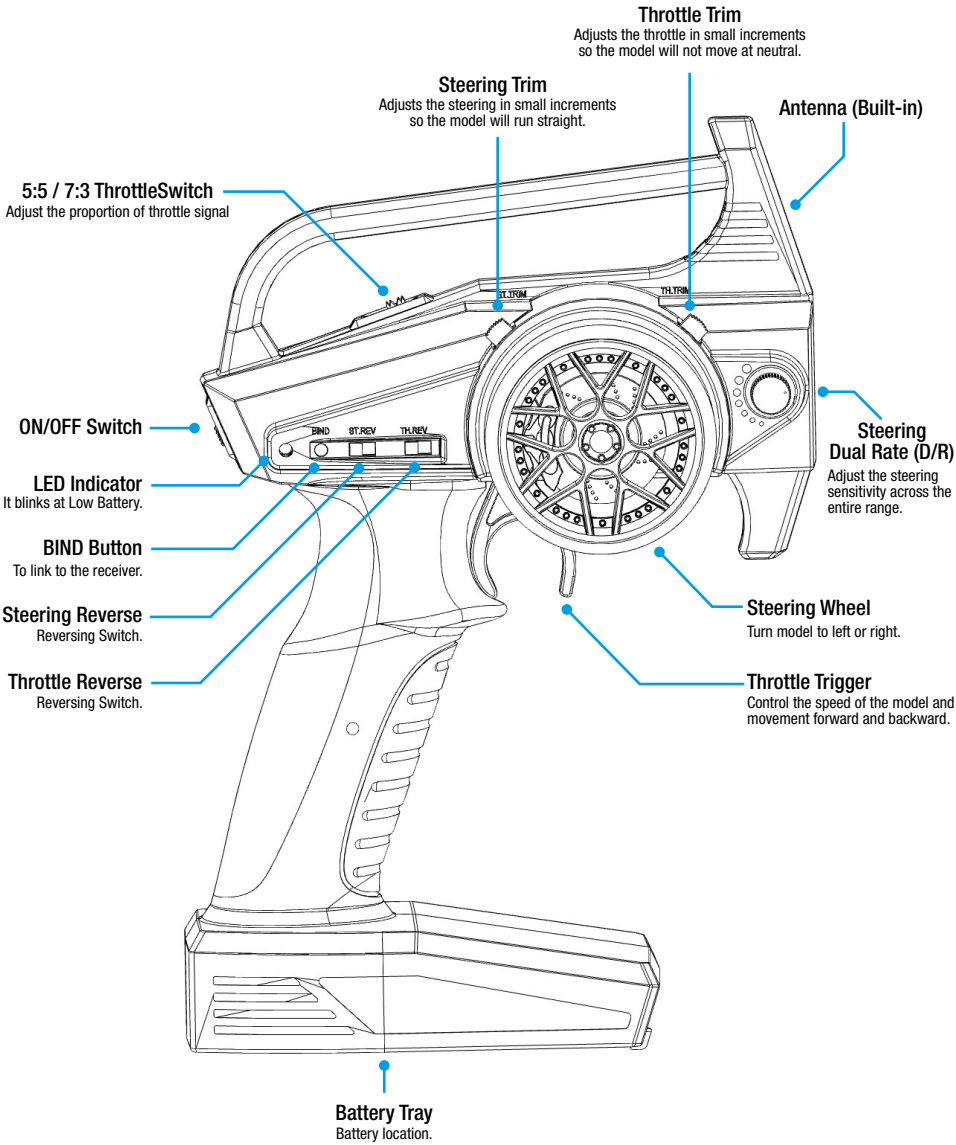

WARNING : Do not cover/hold the built-in antenna part of the transmitter by your hand during running. Do not put any conductive plate/sticker on the antenna part. Otherwise, the operating range may become shorter.

TRANSMITTER FUNCTIONS

ON/OFF SWITCH

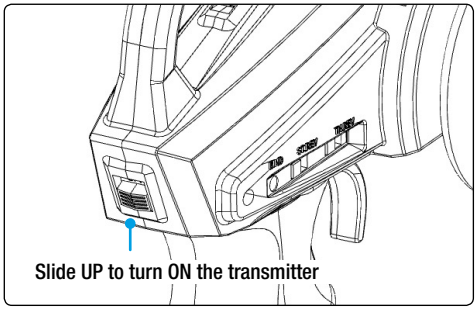

LED Status

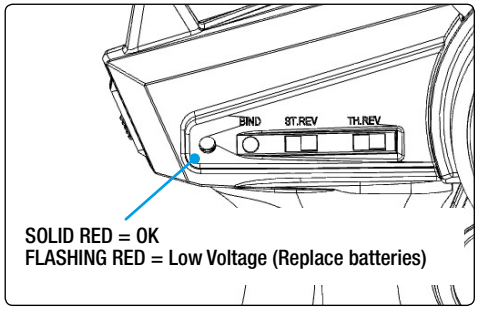

7:3 / 5:5 PROPORTIONNAL THOTTLE SWITCH

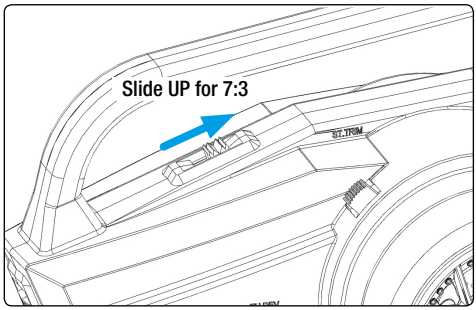

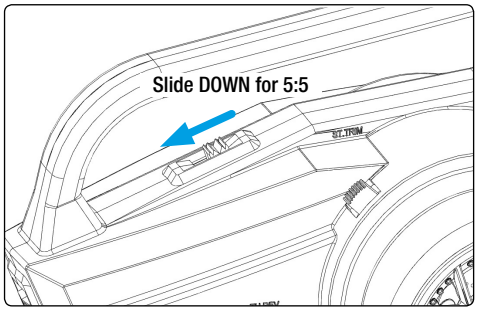

Adjust the proportion of throttle signal on either side of the centre trigger position.
Use the proportion of Forward/Reverse you prefer. We recommend using the 7:3 position for most applications.

SERVO REVERSE SWITCHES

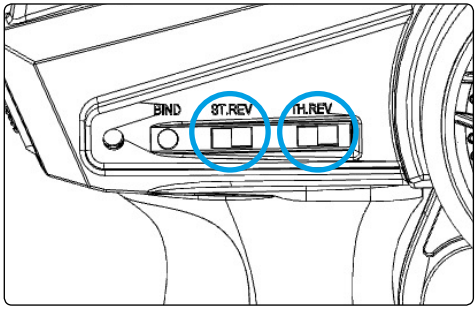

ST.REV (Steering Reverse) : This function reverses the rotation direction of the STEERING servo.

TH.REV (Steering Reverse) : This function reverses the rotation direction of the THROTTLE servo.

DUAL RATE (D/R)

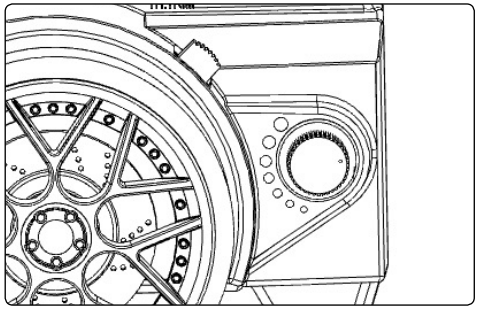

STERRING DUAL RATE : Use this function to adjust the steering travel of your model. If the model understeers while cornering, add steering by turning CW of the D/R button. When the model oversteers, take away steering by turning CCW of the D/R button.

TRANSMITTER FUNCTIONS

STEERING TRIM

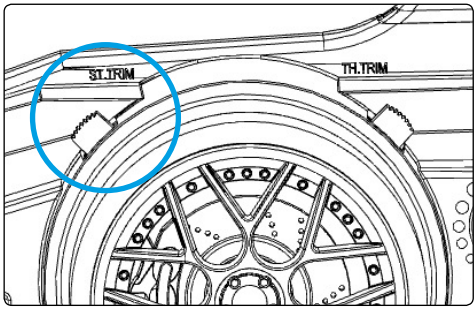

STERRING TRIM : The trim is used to adjust the steering setting so that the car moves in a straight line without using the steering wheel to compensate.

THROTTLE TRIM

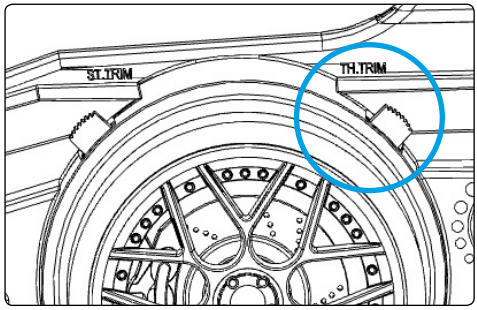

THROTTLE TRIM : The trim is used to adjust the setting of the neutral position of the throttle without using the throttle/brake trigger to compensate.

Please note! : The neutral and maximum positions are indicated by a long beep tone.

RECEIVER CONNECTION

CONNECTION WITH A ESC

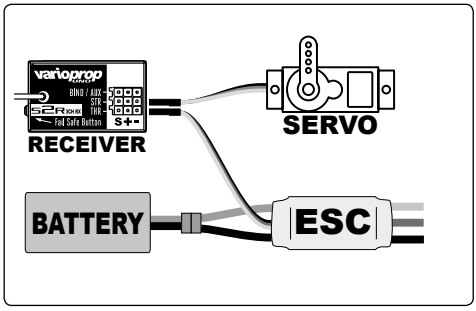

GAS POWERED MODEL

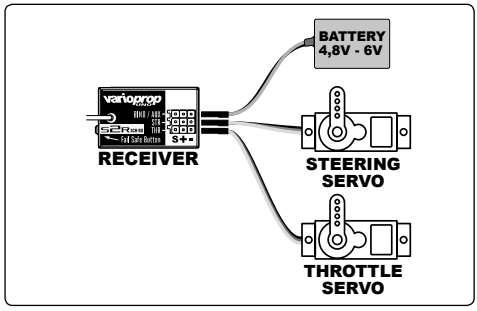

Install the Receiver in your model using double-sided Velcro. Velcro will hold the receiver in place and protect it from vibrations. Mount the antenna up and away from the vehicle in an antenna tube. The higher up the antenna is, the better signal it will receive.
Install and connect the receiver, servos and other components in accordance with the “Assembly Precautions”.

CAUTION: NEVER CUT THE ANTENNA

BATTERY INSTALLATION / REPLACEMENT

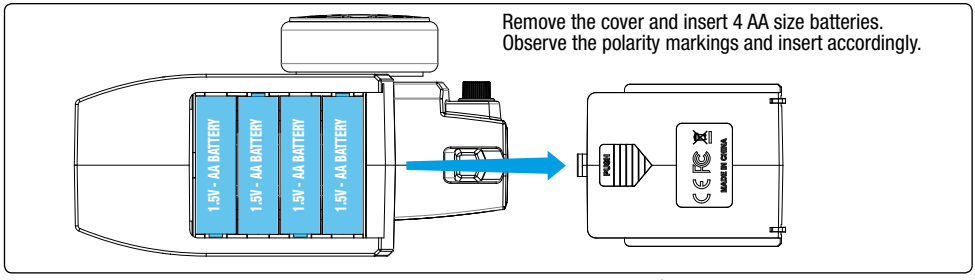

Remove the cover and insert 4 AA size batteries.
Observe the polarity markings and insert accordingly.

LINKING THE RECEIVER AND TRANSMITTER

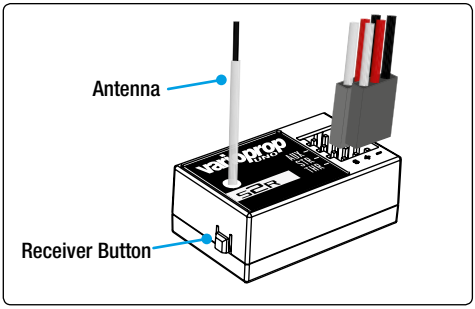

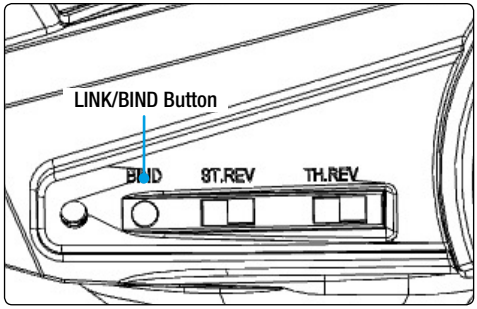

Each transmitter has an individually assigned, unique ID code. In order to start operation, the receiver must be linked with the ID code of the transmitter with which it is being paired. Once the link is made, the ID code is stored in the receiver and no further linking is necessary unless the receiver needs to be used with another Varioprop S2R transmitter.

LINKING/BINDING PROCEDURE:

1. Turn On the Transmitter with pressing on the receiver button for 5 seconds
2. The red LED is flashing slow
3. Power On the receiver
4. The red receiver LED is flashing slow
5. Press the receiver button
6. The linking is finished once the receiver LED stop flashing

Please note! The transmitter stops the linking procedure after the third double beep signal.

FAILSAFE SETTING

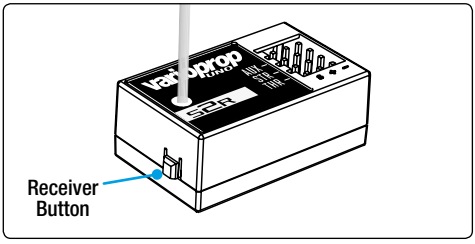

The S2R comes with failsafe set to neutral position on steering and throttle channel. In the event of loss of signal the motor will stop and the vehicle will drift. If the signal is regained normal function will return.

If you wish to program the failsafe to a custom setting just follow these simple steps:

1. With both the transmitter and receiver powered ON, press the receiver button on the receiver for about 3 seconds.
2. The receiver will enter the failsafe setting menu and the receiver LED will flash.
3. You have about 3 seconds to move the transmitter controls (steering and throttle at the same time) to the position that you wish to program into failsafe.
4. After the 3 seconds the receiver will save the settings and return to normal mode.
5. If you wish to reset to a different setting, simply repeat the above steps.

Please note! We recommend to let the failsafe in the neutral position for use in electric powered cars and boats.

CHANGING THE TRAVEL ADJUST SETTINGS (EPA)

The EPA supports precise and individual endpoint adjustment in each direction for the steering and throttle channels.

1. Hold the throttle trigger in the full brake position while powering on the transmitter
2. The red LED flashes rapidly, indicating the programming mode is active.
3. Throttle End Point adjustment: Hold the trigger in the full throttle position and increase or reduce the travel with the TH Trim button.
4. Brake End Point adjustment: Hold the trigger in the full brake position and increase or reduce the travel with the TH Trim button.
5. Left Steering End Point adjustment: Hold the steering wheel in the full left position and increase or reduce the travel with the ST Trim button.
6. Right Steering End Point adjustment: Hold the steering wheel in the full right position and increase or reduce the travel with the ST Trim button.
7. Power Off the transmitter to save the new EPA settings.

Please note! The transmitter stops the linking procedure after the third double beep signal.

OPERATE YOUR MODEL

MOVE YOUR MODEL

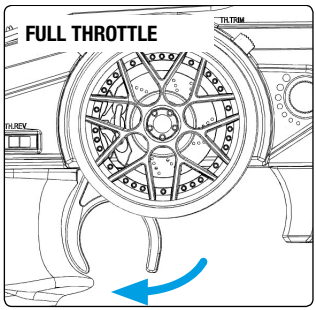

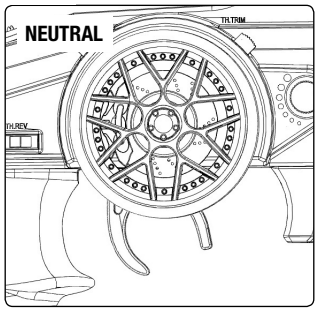

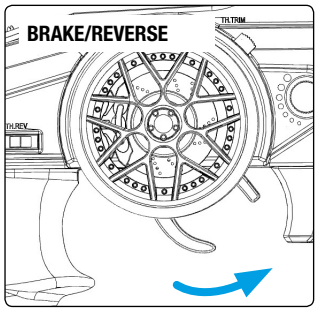

1. Gently pull the trigger to move your model forward.
   The speed is proportional, the more you pull the trigger, the faster the model moves forward.
2. Release the trigger in neutral position to slow down your model.
3. Pull the trigger forward to brake your model.
   For reverse, after stopping the model, release the trigger to neutral position then pull the trigger forward again to activate reverse.

DRIVE YOUR MODEL

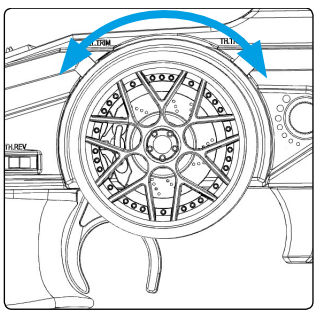

STEERING WHEEL

Gently rotate the steering wheel clockwise/counter-clockwise to turn the wheels. The steering is proportional, the more you turn the wheel, the more the wheels will turn.

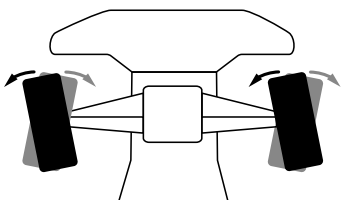

CAUTION

The user is cautioned that changes or modifications not expressly approved by the party responsible for compliance could void the user's authority to operate the equipment.
NOTE: This equipment has been tested and found to comply with the limits for a Class B digital device, pursuant to Part 15 of the FCC Rules. These limits are designed to provide reasonable protection against harmful interference in a residential installation. This equipment generates, uses and can radiate radio frequency energy and, if not installed and used in accordance with the instructions, may cause harmful interference to radio communications. However, there is no guarantee that interference will not occur in a particular installation.
If this equipment does cause harmful interference to radio or television reception, which can be determined by turning the equipment OFF and ON, the user is encouraged to try to correct the interference by one or more of the following measures:
- Reorient or relocate the receiving antenna.
- Increase the separation between the equipment and receiver.
- Connect the equipment into an outlet on a circuit different from that to which the receiver is connected.
- Consult the dealer.

PRECAUTIONS

- Check the receiver, servos, and battery connectors, to be sure they are firmly connected. If a connector is not fully inserted, vibration may cause the connector to work loose while the model is operating. This will result in loss of control.
- Operate each servo horn over its full stroke and check to see that the linkage does not bind or is not too loose. Excessive force applied to the servo horn by binding or poor installation may lead to servo problems and result in loss of control.
- **Electric Cars and Boats :** Isolate the receiver from vibration by attaching to the chassis or mounting plate with thick double sided tape.
  Gas Powered Cars and Boats : Isolate the receiver from vibration by wrapping it in foam rubber or similar type cushioning material. Protect the unit from water damage by placing it in a plastic bag or waterproof radio box.
  The receiver contains precision electronic parts. These parts are vulnerable to vibration and shock. Any contact with moisture (water or condensation) may cause receiver malfunction and loss of control.
- Keep all devices that emit high frequency noise, such as motors, batteries, and wiring that handles heavy current loads, at least 1/2 inch away from the receiver and the receiver antenna. High frequency noise will cause a decrease in operating range and could cause loss of control.
- Install electronic speed control heat sinks as well as other components that conduct electricity so they can not come in contact with aluminium, carbon fibre or other materials that conduct electricity.
  If, for example, the speed control came loose while the model was running and touched an aluminium chassis, a short circuit may occur that would cause irreparable damage to the system as well as loss of control.
- Noise suppression capacitors should be installed on almost all motors. If the proper capacitors are not installed, high frequency noise will reduce range and cause loss of control along with various other problems.
- Inspect all linkage installations and any point where metal could come in contact with other metal parts. Make sure these parts do not touch other metal parts under vibration. Should a linkage or other metal parts come in contact with other metal parts under vibration, the high frequency noise generated by this contact will cause interference and possible loss of control.
- Do Not disassemble any part of this system that is not specified in the instruction manual. Varioprop will not be responsible for any damage due to improper disassembly of any part of the radio control system.

varioprop UNO

www.varioproprc.eu