MAGNAVOX

3-PIECES CD SHELF SYSTEM

with AM/FM Stereo Radio and Bluetooth® Wireless Technology

OWNER'S MANUAL

PLEASE READ BEFORE OPERATING THIS EQUIPMENT.

MODEL: MM435

Size: 148.5(W) x 210(H)mm (A5)

IMPORTANT SAFETY INSTRUCTION

CAUTION

RISK OF ELECTRIC SHOCK
DO NOT OPEN

CAUTION: TO REDUCE THE RISK OF ELECTRIC SHOCK, DO NOT REMOVE COVER (OR BACK). NO USER-SERVICEABLE PARTS INSIDE. REFER SERVICING TO QUALIFIED SERVICE PERSONNEL.

DANGEROUS VOLTAGE:
The lightning flash with arrowhead symbol, within an equilateral triangle is intended to alert the user to the presence of uninsulated dangerous voltage within the product's enclosure that may be of sufficient magnitude to constitute a risk of electric shock to persons.

ATTENTION:
The exclamation point within an equilateral triangle is intended to alert the user to the presence of important operating and maintenance (servicing) instructions in the literature accompanying the appliance.

DANGER
Invisible and hazardous laser radiation when open and inter-lock failed or defeated. Avoid direct exposure to beam.

WARNING:
TO REDUCE THE RISK OF FIRE OR ELECTRIC SHOCK, DO NOT EXPOSE THIS PRODUCT TO RAIN OR MOISTURE.
TO REDUCE THE RISK OF FIRE OR ELECTRIC SHOCK, AND ANNOYING INTERFERENCE, USE THE RECOMMENDED ACCESSORIES ONLY.

INFORMATION:
This equipment has been tested and found to comply with the limits for a Class B digital device, pursuant to Part 15 of the FCC Rules. These limits are designed to provide reasonable protection against harmful interference in a residential installation. This equipment generates, uses and can radiate radio frequency energy and, if not installed and used in accordance with the instructions, may cause harmful interference to radio communications. However, there is no guarantee that interference will not occur in a particular installation. If this equipment does cause harmful interference to radio or television reception, which can be determined by turning the equipment off and on, the user is encouraged to try to correct the interference by one or more of the following measures:

- Reorient or relocate the receiving antenna.
- Increase the separation between the equipment and receiver.
- Connect the equipment into an outlet on a circuit different from that to which the receiver is connected.
- Consult the dealer or an experienced radio/TV technician for help.

IMPORTANT SAFETY INSTRUCTION

Before using the unit, be sure to read all operating instructions carefully. Please note that these are general precautions and may not pertain to your unit. For example, this unit may not have the capability to be connected to an outdoor antenna.

1) **Read these instructions.**
   All the safety and operating instructions should be read before the product is operated.
2) **Keep these instructions.**
   The safety and operating instructions should be retained for future reference.
3) **Heed all warnings.**
   All warnings on the product and in the operating instructions should be adhered to.
4) **Follow all instructions.**
   All operating and use instructions should be followed.
5) **Do not use this apparatus near water.**
   Do not use this product near water and moisture, for example: near a bathtub, washbowl, kitchen sink or laundry tub; in a wet basement; or near a swimming pool.
6) **Clean only with dry cloth.**
   Unplug this product from the wall outlet before cleaning. Do not use liquid cleaners or aerosol cleaners. Use a dry cloth for cleaning.
7) **Do not block any ventilation openings. Install in accordance with the manufacturer's instructions.**
   Slots and openings in the cabinet and in the back or bottom are provided for ventilation, to ensure reliable operation of the product and to protect it from overheating. These openings must not be blocked or covered. The openings should never be blocked by placing the product on a bed, sofa, rug or other similar surface. This product should never be placed near or over a radiator or heat source. This product should not be placed in a built-in installation such as a bookcase or rack unless proper ventilation is provided or the manufacturer's instructions have been adhered to.
8) **Do not install near any heat sources such as radiators, heat registers, stoves, or other apparatus (including amplifiers) that produce heat.**
9) **Do not defeat the safety purpose of the polarized or grounding-type plug.**
   A polarized plug has two blades with one wider than the other. A grounding type plug has two blades and a third grounding prong. The wide blade or the third prong is provided for your safety. If the provided plug does not fit into your outlet, consult an electrician for replacement of the obsolete outlet.
10) **Protect the power cord from being walked on or pinched particularly at plugs, convenience receptacles, and the point where they exit from the apparatus.**
11) **Only use attachments/accessories specified by the manufacturer.**
12) **Use only with the cart, stand, tripod, bracket, or table specified by the manufacturer, or sold with the apparatus. When a cart is used, use aution when moving the cart/apparatus combination to avoid injury from tip-over.**

    An appliance and cart combination should be moved with care.
    Quick stops, excessive force and uneven surfaces may cause the appliance and cart combination to overturn.

IMPORTANT SAFETY INSTRUCTION

13) **Unplug this apparatus during lightning storms or when unused for long periods of time.**
To protect your product from a lightning storm, or when it is left unattended and unused for long periods of time, unplug it from the wall outlet and disconnect the antenna or cable system. This will prevent damage to the product due to lightning and power-line surges.

14) **Refer all servicing to qualified service personnel. Servicing is required when the apparatus has been damaged in any way, such as power-supply cord or plug is damaged, liquid has been spilled or objects have fallen into the apparatus, the apparatus has been exposed to rain or moisture does not operate normally, or has been dropped.**

15) **Power source**
This product should be operated only from the type of power source indicated on the marking label. If you are not sure of the type of power supply to your home, consult your appliance dealer or local power company. For products intended to operate from battery power, or other source, refer to the operation instructions.

16) **Power lines**
An outside antenna system should not be located in the vicinity of overhead power lines or other electric light or power circuits, or where it can fall into such power lines or circuits. When installing an outside antenna system, extreme care should be taken to keep from touching such power lines or circuits as contact with them might be fatal.

17) **Overloading**
Do not overload wall outlets and extension cords as this can result in a risk of fire or electric shock.

18) **Object and liquid entry**
Never push objects of any kind into this product through openings as they may touch dangerous voltage points or short out parts that could result in fire or electric shock. Never spill or spray any type of liquid on the product.

19) **Outdoor antenna grounding**
If an outside antenna is connected to the product, be sure the antenna system is grounded so as to provide some protection against voltage surges and built up static charges. Section 810 of the National Electric Code ANSI/NFPA 70 provides information with respect to proper to grounding of the mast and supporting structure, grounding of the lead-in wire to an antenna discharge product, size of grounding conductors, location of antenna-discharge product, connection to grounding electrodes and requirements for the grounding electrodes.

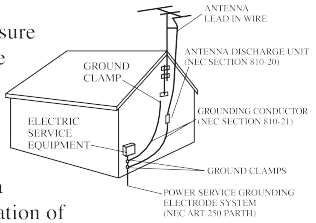

20) **Service**
Do not attempt to service this product yourself as opening or removing covers may expose you to dangerous voltage or other hazards. Refer all servicing to qualified service personnel.

IMPORTANT SAFETY INSTRUCTION

21) Replacement parts

When replacement parts are required, be sure the service technician uses replacement parts specified by the manufacturer or those that have the same characteristics as the original parts. Unauthorized substitutions may result in fire or electric shock or other hazards.

22) Safety check

Upon completion of any service or repairs to this product, ask the service technician to perform safety checks to determine that the product is in proper operation condition.

23) Wall or ceiling mounting

The product should be mounted to a wall or ceiling only as recommended by the manufacturer.

24) Damage requiring service

Unplug this product from the wall outlet and refer service to qualified service personnel under the following conditions.

a) When the power-supply cord or plug is damaged.
b) If liquid has been spilled or objects have fallen into the product.
c) If the product has been exposed to rain or water.
d) If the product does not operate normally by following the operating instructions. Adjust only those controls that are covered by the operating instructions, as an adjustment of other controls may result in damage and will and require extensive work by a qualified technician to restore in the product to its normal operation.
e) If the product has been dropped or the cabinet has been damaged.
f) When the product exhibits a distinct change in performance-this indicates a need for service.

25) Note to CATV system installer

This reminder is provided to call the CATV system installer's attention to Article 820-40 of the NEC that provides guidelines for proper grounding and, in particular, specifies that the cable ground shall be connected to the grounding system of the building, as close to the point of cable entry as practical.

NOTE: Refer all servicing to qualified service personnel. Servicing is required when the unit has been damaged in any way such as the following: the power-supply cord or plug has been damaged, liquid has been spilled into the unit, the unit has been exposed to rain or moisture, the unit has been dropped or the unit does not operate normally.

CARE AND MAINTENANCE

Caring for Compact Discs

- Treat the disc carefully. Handle the disc only by its edges. Never allow your fingers to come in contact with the shiny, unprinted side of the compact disc.
- Do not attach adhesive tape, stickers, etc. to the compact disc label.
- Clean the compact disc periodically with a soft, lint-free, dry cloth. Never use detergents or abrasive cleaners to clean the compact disc. If necessary, use a CD cleaning kit.
- If a compact disc skips or gets stuck on a section of the compact disc, it is probably dirty or damaged (scratched).
- When cleaning the compact disc, wipe in straight lines from the centre of the compact disc to the outer edge of the compact disc. Never wipe in circular motions.

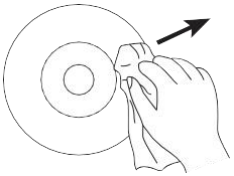

- This unit is designed to play only compact discs bearing the identification logo as shown here. Other discs may not conform to the CD standard and may not play properly.

COMPACT disc DIGITAL AUDIO

- Compact Discs should be stored in their cases after each use to avoid damage.
- Do not expose compact discs to direct sunlight, high humidity, high temperatures or dust, etc. Prolonged exposure or extreme temperatures can warp the disc.
- Do not stick or write anything on either side of the disc. Sharp writing instruments, or the ink, may damage the surface.

Cleaning the Unit

- To prevent fire or shock hazard, disconnect your unit from the AC power source when cleaning.
- The finish on your unit may be cleaned with a dust cloth and cared for as other furniture. Use caution when cleaning and wiping the plastic parts.
- Mild soap and a damp cloth may be used on the front panel.

LOCATION OF CONTROLS

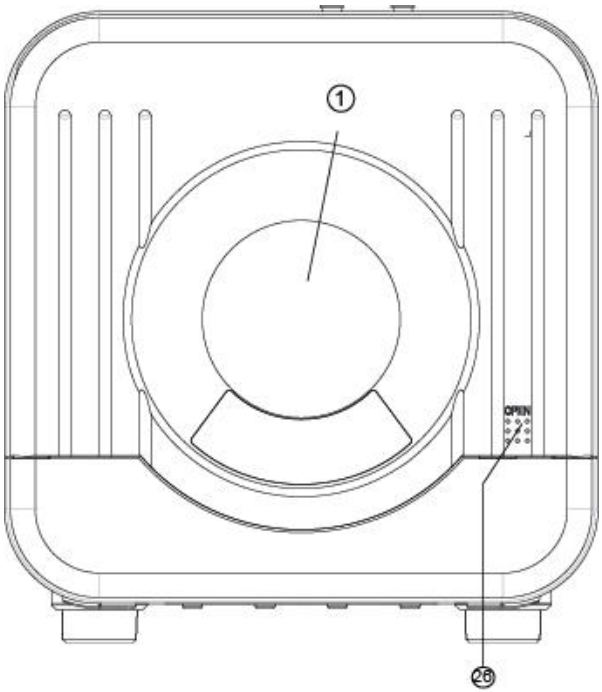

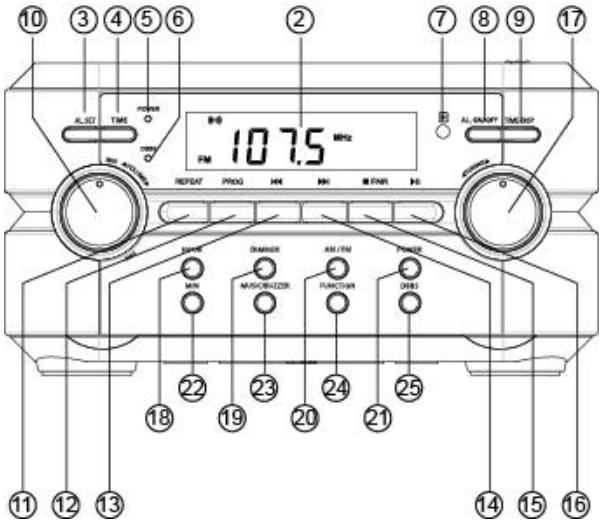

1. CD DOOR	14. ⏭ (Next/Skip Forward) Button
2. LCD Display	15. ■ (Stop) Button
3. AL.SET (Alarm Set) Button	16. ⏯ (Play/Pause) Button
4. TIME (Set) Button	17. TUNING Knob
5. POWER Indicator	18. HOUR (Set) Button
6. DBBS (Dynamic Bass Boost System) Indicator	19. DIMMER Button
7. Remote Receiver	20. AM/FM Button
8. AL. ON/OFF (Alarm On/Off) Button	21. POWER Button
9. TIME-DISP (Time Display) Button	22. MIN (Minute Set) Button
10. VOLUME Control Knob	23. MUSIC/BUZZER Button
11. REPEAT Button	24. FUNCTION Button
12. PROG (Program) Button	25. DBBS (Dynamic Bass Boost System) Button
13. ⏮ (Previous/Skip Backward) Button	26. CD Door OPEN (Close) Area

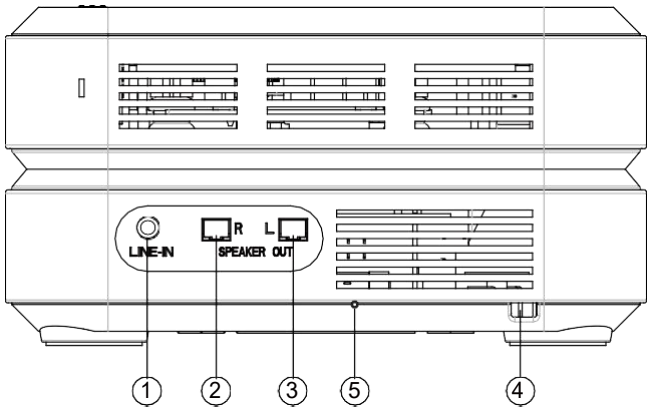

1. LINE-IN Jack	2. SPEAKER OUT R (Right) Jack
3. SPEAKER OUT L (Left) Jack	4. AC Power Cord
5. FM Wire Antenna	

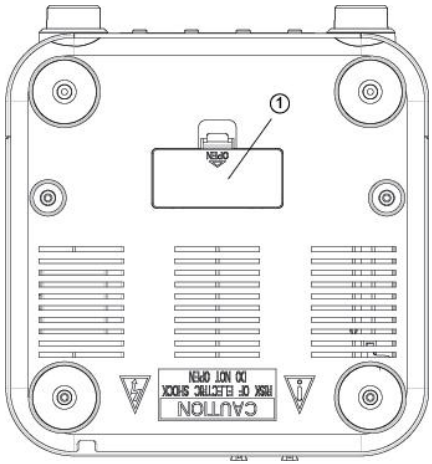

1. Battery Door

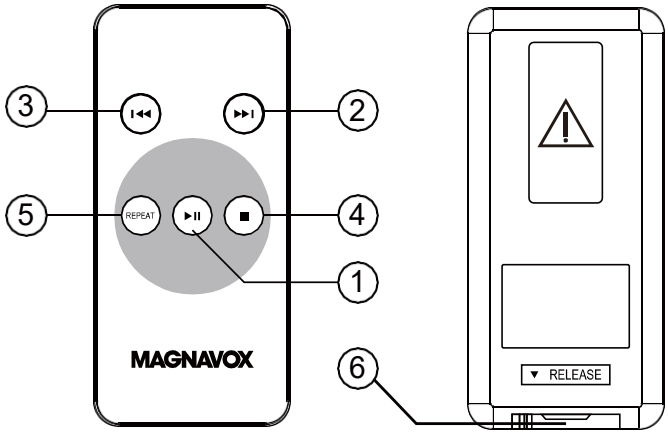

1. ⏯ (Play/Pause) Button	2. ⏭(Next/Skip Forward) Button
3. ⏮(Previous/Skip Backward) Button	4. ■(Stop) Button
5. REPEAT Button	6. Battery Holder

CONNECTION:

Connect the small plug from the Left and Right Speaker Boxes to the SPEAKER OUT L & R Jacks on the rear of main unit as the illustrated below:

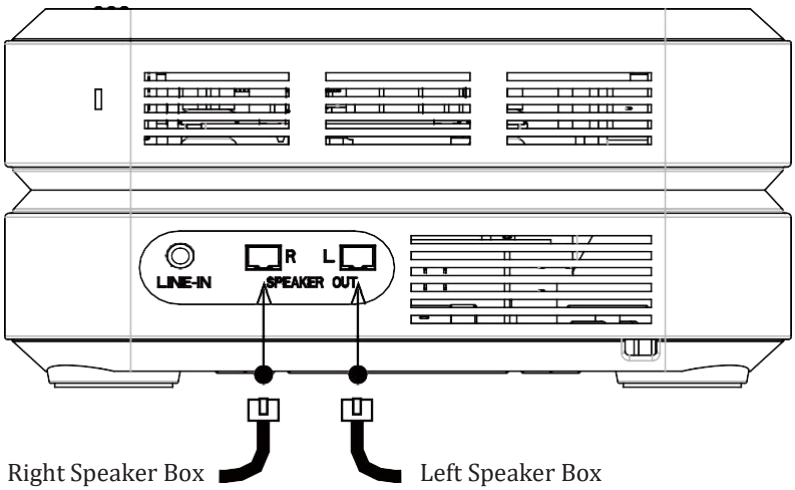

POWER SOURCE:

Main Unit:

Unwind the AC power cord and extend it to its full length. Insert the AC plug of the cord into any convenient AC 120V~; 60Hz household outlet as the illustrated below:

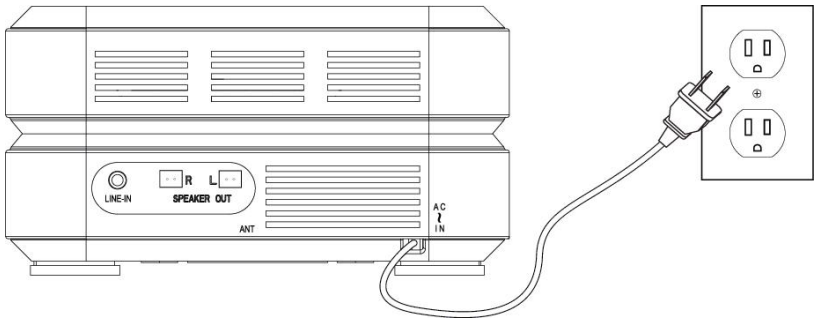

Notes:

- This unit is equipped with a polarized AC plug which has one blade wider than the other. This is a safety feature to reduce the like holder of electric shock. This polarized AC plug will only fit in a polarized AC outlet. If you find that you cannot insert this plug into your outlet, you may have an obsolete non-polarized outlet. Please do not try to defeat this safety feature by using a non-polarized adaptor or by filling the wider blade to make it fit into your outlet. If this plug does not fit into your outlet, you should contact a qualified licensed electrician to replace your obsolete outlet.
- If the AC power failure, this electronic clock is designed to continue operating internally (without showing the time on the LCD Display) with two (2) AAA size batteries (not included).
  Install the batteries as follows:
  - Open the battery door on the bottom of the unit by press the tab and then lifting it as the illustrated follows:

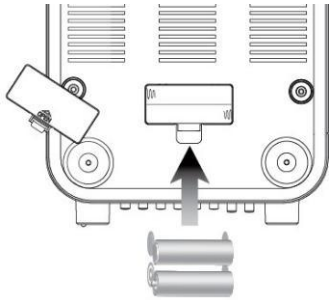

  - Insert two (2) AAA size batteries (not included) according to the polarity diagram inside the battery compartment. (Alkaline batteries are recommended.)
  - Replace the battery door.

REMOTE CONTROL:

First time use:
Remove and discard the insulation film as the illustrated follows:

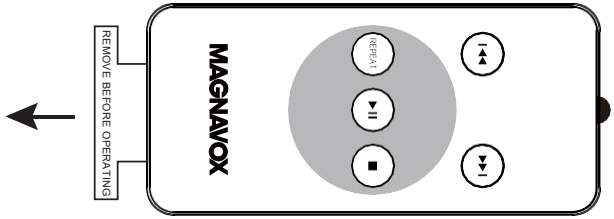

Replacing the button cell when it is drained:

- Push and slide out the battery holder as the illustrated below.
- Replace the button cell with new CR2025 button cell as the polarity markings on the rear of the Remote Control.
- Close the battery holder.

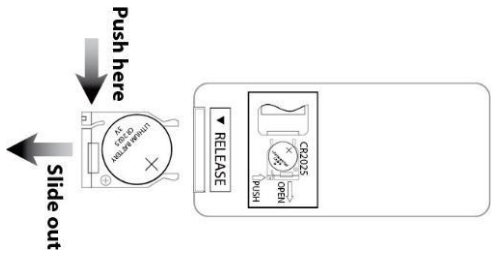

BATTERY PRECAUTIONS:

Follow these Battery Precaution when using a battery in this device:

1. Use only the size and type of battery specified.
2. Be sure to follow the correct polarity when installing the battery as indicated in the battery compartment. A reversed battery may cause damage to the device.
3. Do not mix different types of batteries together (e.g. Alkaline and Carbon-zinc) or old batteries with fresh ones.
4. If the batteries in the device are consumed or the device is not to be used for a long period of time, remove the batteries to prevent damage or injury from

possible battery leakage.

5. Do not try to recharge the battery not intended to be recharged; it can overheat and rupture. (Follow battery manufacturer's instructions.)
6. Do not dispose of battery in fire. Battery may explodes or leak.
7. Clean the battery contacts and also those of the device prior to battery installation.
8. ⚠ This product contains a coin/button cell battery. If the coin/button cell battery is swallowed, it can cause severe internal burn in just 2 hours and can lead to death.
   Keep new and used batteries away from children. If the battery compartment does not close securely, stop using the product and keep it away from children.
   If you think batteries might have been swallowed or placed inside any part of the body, seek immediate medical attention.

EFFECTIVE DISTANCE OF REMOTE CONTROL

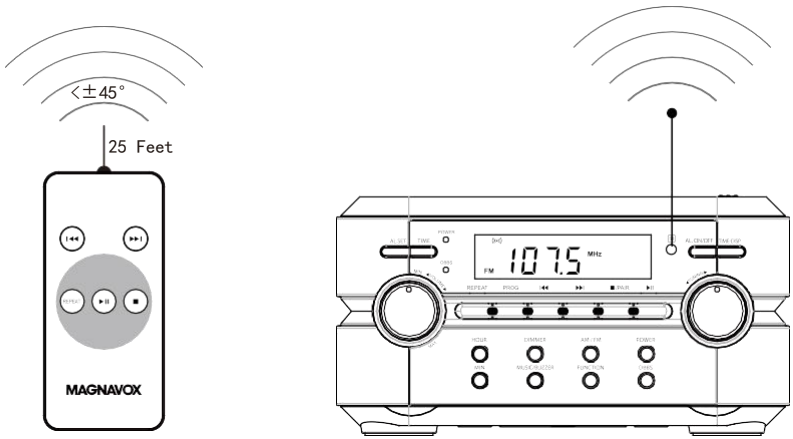

- When there is an obstacle blocking between the sensor, the remote may not work.
- When direct sunlight, or any other strong light shines on the remote control, the remote operation may be unstable.

OPERATION

GENERAL OPERATION:

1. Connect the unit to AC power as previously instructed. The unit will enter to standby mode automatically and the LCD Display will illuminate.
2. Press the POWER Button on the unit to turn on the unit from standby mode. The POWER Indicator will illuminate.
3. Press the FUNCTION Button repeatedly to switch to desired playback mode. The correspondent indicator will appear on the display with your selection (see list below):

Playback Mode:	**Indicators:**
CD	“Cd” will appear on the display
BT (Bluetooth)	“bt” will appear on the display
Radio FM Band	“FM” will appear on the display
Radio AM Band	“AM” will appear on the display

4. During playback,
   - Turn the VOLUME Control Knob on the unit to adjust volume level as desired.
   - Press the DBBS Button to turn on the Dynamic Bass Boost System (to enhance the bass of the sound), the DBBS Indicator will illuminate. Press again to turn it off.
5. Press the DIMMER Button repeatedly to set the brightness level of display.
6. When finished listening, press the POWER Button on the unit to turn back to standby mode.

CLOCK:

To set or reset the actual time:

In Standby mode, press and holding the TIME (Set) Button, time on display will blinking. Then:

- Press the HOUR (Set)Button on the unit to set hour.
  (Make sure the PM Indicator appearing on the display if the time is PM and AM Indicator appearing on the display if the time is AM).
- Press the MIN (Minute Set)Button on the unit to set minute.
- When finished settings, release the TIME (Set) Button to save the settings and exit, time on display will stop blinking.

ALARM SET:

To set or reset the alarm time:

In Standby mode, press and holding the AL. SET (Alarm Set) Button on the unit, alarm time will appear on the display and blinking. Then:

- Press the HOUR (Set)Button on the unit to set hour.
  (Make sure the PM Indicator appearing on the display if the alarm time is PM and AM Indicator appearing on the display if the alarm time is AM).
- Press the MIN (Minute Set) Button on the unit to set minute.
- When finished settings, release the AL. SET Button to save the settings and exit. The actual time will appear on the display.
- Press the AL. ON/OFF (Alarm On/Off) Button to activate alarm. The "🔔" Indicator will appear on the display.

To set or reset the wake up mode:

In alarm on mode, press and holding the AL. SET Button, alarm time will appear on the display and blinking. Press the MUSIC/BUZZER Button at the same time repeatedly to set or reset the wake up mode as desired. The correspondent indicator(s) will appear on the display with your selection (see list below):

- 🔔: Wake up by Buzzer
- 🔔 + CD : Wake up by CD
- 🔔 + ♪ : Wake up by Radio

Notes:

1. After setting, press the AL. SET Button to read the Alarm time.
2. Alarm will not operation when the unit is in power on mode.
3. If radio wake up mode was selected, received the desired radio station as previous procedure and also set the desired volume level before activate alarm. Otherwise, when Alarm goes off, no sound output from the speaker or sound weak.
4. If CD wake up mode was selected, make sure you were placed the desired CD disc in the unit and sound level was set to suitable level. Otherwise, when Alarm goes off, no sound output from the speaker or sound weak.

Shut off alarm:

- When alarm goes off, press the AL.ON/OFF Button on the unit once. Alarm will turn on again on next day.
- To turn off alarm completely (alarm will not turn on next day), press the AL. ON/OFF Button repeatedly until all the correspondence alarm indicators disappear on the display.

BT (BLUETOOTH) :

BT (Bluetooth) pairing

First time use or re-pairing the unit to a new BT Device, pair as follows:

1. Power on the unit and enter to BT mode as previously instructed. “bt” indicator will appear on the display and blink.
2. Power on the external BT Device and enter to BT searching mode. Start pairing following the on screen instructions from the external BT Device. After paired, the “bt” indicator on the display will stop blinking.
3. If pairing is complete you may now play music with your external BT Device.
4. During playback:
   - Press the ⏯ Play/Pause Button on the unit or Remote Control to pause, press again to resume normal playback.
   - Press the ⏭ (Next/Skip Forward) or ⏮ (Previous/Skip Backward) Buttons on the unit or Remote Control repeatedly to skip tracks.

Notes:

- When the external BT Device searched the unit, the model number “MM435” will appear on the display of external BT Device.
- If while pairing you are asked for a code, please try "0000" or "1234".

Normal operation after pairing:

1. Turn on the BT function of the external BT Device.
2. Power on the unit and enter to BT mode as previously instructed. “bt” indicator will appear on the display and blink.
3. Wait a few seconds until the unit is automatically paired to the external BT Device. (“bt” indicator on the display will stop blinking).
4. After pairing is complete you may now play music with your external BT Device.

RADIO:

1. Power on the unit and enter to Radio mode as previously instructed. “AM” or “FM” indicator and the radio frequency will appear on the display.
2. Press the AM/FM Button to select the radio band as desired.
3. Turn the TUNNING Knob to receiving the desired radio station.
4. Press the TIME-DISP (Time-Display) Button repeatedly to read the radio frequency or actual time.

Note: If stereo FM radio station is receiving in FM band. The FM stereo indicator “FM” will appear on the display automatically.

Antennas:

AM – This unit has a build in ferrite rod antenna, which provides adequate reception in most areas. If reception is weak, turn the unit to improve reception.
FM – The FM Wire Antenna is for FM reception only. If reception is weak, unwound and relocation the wire antenna.

CD:

CD Playbacky:

1. Open the CD door by press the CD OPEN (Close) area.
2. Place a CD disc on the center spindle, with the printed label side up.
3. Close the CD Door by press the CD OPEN (Close) area.
4. Power on the unit and enter to CD mode as previously instructed. “Cd” indicator will appear on the display.
5. Wait a few seconds until the total number of tracks appears on the display. Then press the ▶II Play/Pause Button on the unit or Remote Control to start playback.
6. During playback:
   - Press the ▶II Play/Pause Button on the unit or Remote Control to pause, press again to resume normal playback.
   - Press the ▶▶| (Next/Skip Forward) or |◀◀ (Previous/Skip Backward) Buttons on the unit or Remote Control repeatedly to skip tracks.
   - Press and holding the ▶▶| (Next/Skip Froward) or |◀◀ (Previous/Skip Backward) Buttons on the unit or Remote Control repeatedly to fast searching the specified section.
   - To stop, press the ■ (Stop) Button on the unit or Remote Control.

Repeat Playback:

1. During playback, press the REPEAT Button on the unit or Remote Control once. “REP 1” indicator will appear on the display. The current track will playback repeatedly.
2. During playback, press the REPEAT Button twice. “REP ALL” indicator will appear on the display. All the tracks on the current disc will be playback repeatedly.
3. To cancel the repeat function, press the REPEAT Button repeatedly until all the repeat indicators disappear on the display.

3. To cancel the repeat function, press the REPEAT Button repeatedly until all the repeat indicators disappear on the display.

Programmed Playback:

Up to 20 tracks can be programmed playback as follows:

1. In CD stop playing mode, press the PROG (Program) Button. “PROG 01” will appear on the display and PROG indicator will blink.
2. Select the first specific track to be programmed by pressing the ⏭ (Next/Skip Forward) or ⏮ (Previous/Skip Backward) Buttons on the unit or Remote Control repeatedly.
3. Press the PROG Button again to store the selected track into the memory.
4. Repeat steps 2 and 3 until all the specific tracks stored into the memory.
5. Press the ⏯ Play/Pause Button on the unit or Remote Control to start program playback.
6. To stop press the ■ (Stop) Button on the unit or Remote Contronl once. “PROG” indicator will remain on the display. Then press the ⏯ Button to start program playback again.
7. To stop and cancel the program, press the ■ (Stop) Button on the unit or Remote Control twice. “PROG” indicator on the display will disappear.

<u>LINE (AUX) IN:</u>

1. Connect the external Audio Device with a 3.5mm AUX cable. (Cable not included).
2. Insert one end of the AUX cable to the Phone; Line Out or AUX Out Jack on the external Audio player.
3. Power on the unit from Standby mode by press the POWER Button on the unit. Insert the other end of the AUX cable into the LINE IN Jack on the rear of unit. The unit will enter to the LINE IN mode automatically. “AU” indicator will appear on the display.
4. Play the music on the connected Player as usual. (Make sure the volume level of the connected Audio Player is turned to high level.)

Note:

If the Aux Cable was plugged into the LINE IN Jack, the other function such like BT; CD and Radio will be auto cut. Unplug the cable from the LINE IN Jack before use IN Jack before use other functions.

TROUBLESHOOTING

Check the following before requesting service:

SYMPTOM	POSSIBLE CAUSE	POSSIBLE SOLUTION
No power	AC Power cord had not connected	Plug the AC Cord to any wall outlet having AC 120V~; 60Hz
No sound or sound weak	Volume of the unit was set to minimum position	Increase the volume level by turning the VOLUME Control Knob clockwise
	Volume level of paired/connected device is in low level	Rise the volume level of the paired/connected device
Sound distortion	Volume level too high	Reduce the volume level by turning the VOLUME Control Knob counterclockwise
	Volume level of the connected/paired device too high	Reduce the volume level of the connected/paired device
Radio; CD or BT not functioning	Audio connection cable was inserted into the LINE IN jack	Unplug the cable from LINE IN Jack
BT not functioning	Unit not in BT mode	Press the FUNCTION Button repeatedly until “bt” appear on the display
	The external BT device had NOT paired to the unit	Pair the external BT Device to the unit as page 15
	The external BT device too far from the unit	Place the external BT device close to the unit
CD not play	Unit not in CD mode	Press the FUNCTION Button repeatedly until “Cd” appear on the display
	CD disc incorrect install	Place the CD disc on the center spindle with label side face up
	Disc is dirty or scratched	Try other discs
Radio not function	Unit not in radio mode	Press the FUNCTION Button repeatedly until “AM” or “FM” indicator appear on the display
Radio reception not good	The direction or location no good for radio reception	Turn the unit to a new direction or replace the unit to a new location

SPECIFICATTIONS

Power Source:	AC 120V~; 60Hz; 18W
Clock Back Up:	DC ⎓ 3V; 2 x “AAA” size batteries (Not included)
BT Version:	5.0
BT Operation Distance:	<=32 Feet in open area
Radio Frequency:	AM: 520-1710kHz FM: 87.5-108MHz
Disc Compatible:	CD; CD-R; CD-RW
Impedance of Speakers:	2 x 3W; 4ohm
Audio power:	2 x 2W (Total 4W, RMS)

ACCESSORIES

1 x User’s Manual
1 x Remote Control (Uses 1 x CR2025 Button Cell, Included)

SPECIFICATIONS AND ACCESSORIES ARE SUBJECT TO CHANGE WITHOUT NOTICE

FCC Statement
has been tested and found to comply with the limits for a Class A and Class B digital device, pursuant to part 15 of the FCC Rules. These limits are designed to provide reasonable protection against harmful interference when the equipment is operated in a commercial environment. This equipment generates, uses, and can radiate radio frequency energy and, if not installed and used in accordance with the instruction manual, may cause harmful interference to radio communications. Operation of this equipment in a residential area is likely to cause harmful interference in which case the user will be required to correct the interference at his own expense.
Note:
This device complies with Part 15 of the FCC Rules. Operation is subject to the following
two conditions: (1) this device may not cause harmful interference, and (2) this device must accept any interference received, including interference that may cause undesired operation.

LIMITED WARRANTY

Craig Electronics warrants this product to be free from manufacturing defects in material and workmanship under normal use for a period of 180 days from date of purchase. If service is required, please return the product to the store where it was purchased for exchange; or, pack the unit in the original packing material with all accessories if applicable, a copy of your sales receipt and a Cashier's check or Money Order for $12 (to cover shipping and handling costs) payable to Craig Electronics Inc. For consumers in Canada, please make sure that the cashier check or money order is redeemable through a U.S. bank. Ship your product freight pre-paid. Your unit will be repaired, replaced or if the unit cannot be repaired or replaced, a refund will be forwarded to you within four weeks of receipt of your unit. Please ship your unit to:

Craig Electronics Inc.
1160 NW 163 Drive
Miami, Fl 33169

This warranty is void if the product has been: a) Used in a commercial application or rental. b) Damaged through misuse, negligence, or abuse. c) Modified or repaired by anyone other than an authorized Craig service center. d) Damaged because it is improperly connected to any other equipment.
Note: This warranty does not cover: a) Ordinary adjustments as outlined in the Owner's Manual which can be performed by the customer. b) Damage to equipment not properly connected to the product. c) Any cost incurred in shipping the product for repair. d) Damage to the product not used in the USA.

This warranty is not transferable and only applies to the original purchase. Any implied warranties, including the warranty of merchantability, are limited in duration to the period of this expressed warranty and no warranty whether expressed or implied shall apply to the product thereafter.

Under no circumstance shall Craig be liable for any loss or consequential damage arising out of the use of this product. This warranty gives specific legal rights. However, you may have other rights which may vary from state to state. Some states do not allow limitations on implied warranties or exclusion of consequential damage. Therefore, these restrictions may not apply to you.

This product has been manufactured by and is sold under the responsibility of Craig Electronics Inc, and Craig Electronics Inc is the warrantor in relation to this product. MAGNAVOX and SMART. VERY SMART are registered trademarks of Koninklijke Philips N.V. and are used under license from Koninklijke Philips N.V.

To Obtain Service on your Product
email: magnavox@craigelectronics.com

Printed in China MM435_WC_E0TT2_B0US