TEST REPORT

Product Name	:	Portable general purpose luminaires LED desk lamp
Model Number	:	DE25611H11
FCC ID	:	2AT2H-DE25611H11

Prepared for	:	Ningbo Chinyo Lighting Appliance Co., Ltd
Address	:	No. 7, Ketai Road, Wangchun Industrial Zone Haishu District, Ningbo, Zhejiang Provincce, China
Prepared by	:	EMTEK (NINGBO) CO., LTD.
Address	:	1F Building 4, 1177#, Lingyun Road, Ningbo National Hi-Tech Zone, Ningbo, Zhejiang, China. Tel: +86-574-27907998 Fax: +86-574-27721538

Report Number	:	ENB2204150137W00101R
Date(s) of Tests	:	April 15, 2022 to May 09, 2022
Date of Issue	:	May 11, 2022

TABLE OF CONTENT

Test Report Description Page

1. SUMMARY OF TEST RESULTS 5

2. GENERAL INFORMATION 6

2.1. Description of Device (EUT) 6
2.2. Input / Output Ports 6
2.3. Independent Operation Modes 7
2.4. Test Manner 7
2.5. Description of Test Facility 7
2.6. Description of Support Device 8
2.7. Measurement Uncertainty 8

3. MEASURING DEVICE AND TEST EQUIPMENT 9

3.1. Conducted Emission Test Equipment 9
3.2. For 3m Radiated Emission Measurement 9K-30M (3m chamber 1#) 9
3.3. For 3m Radiated Emission Measurement 30M-1G (3m chamber 1#) 9

4. 20DB BANDWIDTH 10

4.1. Test Procedure 10
4.2. Test Results 10

5. POWER LINE CONDUCTED EMISSION MEASUREMENT 11

5.1. Block Diagram of Test Setup 11
5.2. Limits 11
5.3. Test Procedure 11
5.4. Measuring Results 12

6. RADIATED EMISSION TEST 15

6.1. Measurement Procedure 15
6.2. Test SET-UP (Block Diagram of Configuration) 15
6.3. Radiated Emission Limit 16
6.4. Measurement Result 17

7. ANNTENNA APPLICATION 21

7.1. Antenna Requirement 21
7.2. Result 21

TEST REPORT DESCRIPTION

Applicant	:	Ningbo Chinyo Lighting Appliance Co., Ltd
Address	:	No. 7, Ketai Road, Wangchun Industrial Zone Haishu District, Ningbo, Zhejiang Provincce, China.
Manufacturer	:	Ningbo Chinyo Lighting Appliance Co., Ltd
Address	:	No. 7, Ketai Road, Wangchun Industrial Zone Haishu District, Ningbo, Zhejiang Provincce, China.
EUT	:	Portable general purpose luminaires LED desk lamp
Model Name	:	DE25611H11
Trademark	:	N/A

We hereby certify that:

The above equipment was tested by EMTEK (NINGBO) CO., LTD. The test data, data evaluation, test procedures, and equipment configurations shown in this report were made in accordance with the procedures given in ANSI C63.10 (2013) and the energy emitted by the sample EUT tested as described in this report is in compliance with the requirements of FCC Rules Part 15C

The test results of this report relate only to the tested sample identified in this report.

Date of Test	:	April 15, 2022 to May 09, 2022
Prepared by	:	June Gao/Engineer
Reviewer	:	Vinay/Supervisor
Approved & Authorized Signer	:	Tony Wei/Manager

Modified Information

Version	Report No.	Revision Data	Summary
/	ENB2204150137W00101R	/	Original Version

1. SUMMARY OF TEST RESULTS

EMISSION		
Description of Test Item	Standard & Limits	Results
Conducted Emission	FCC Part 15, Subpart C- Section 15.207 ANSI C63.10-2013	Pass
Radiated Emission	FCC Part 15, Subpart C- Section 15.209 ANSI C63.10-2013	Pass
Note: N/A is an abbreviation for Not Applicable.		

2. GENERAL INFORMATION

2.1. Description of Device (EUT)

Product:	Portable general purpose luminaires LED desk lamp
Model Number:	DE25611H11
Sample Number:	1#
Power Supply:	DC 12V from adapter
Wireless specification	5W/7.5W
Modulation:	Ask
Maximum Power Rate:	65.97 dBuV/m
Frequency Range:	110 kHz~205 KHz
Antenna Type:	Integral Antenna(Induction coil)
Antenna Gain:	0 dBi
Operating Temperature	0°C ~ +50°C
Date of Received:	February 28, 2022

2.2. Input / Output Ports

Port #	Name	Type*	Cable Max. >3m	Cable Shielded	Comments
1	DC Power Port	DC	No	N/A	None

* Note: For the purposes of the present document, the following symbols apply:

AC AC Power Port
DC DC Power Port
N/E Non-Electrical
I/O Signal Input or Output Port (Not Involved in Process Control)
TP Telecommunication Ports

2.3. Independent Operation Modes

A 1. Wireless Charging(Full load)

2.4. Test Manner

Test Items	Test Voltage	Operation Modes
Conducted Emission	AC 120V/60Hz	Mode A.1
Radiated Emission	AC 120V/60Hz	Mode A.1

2.5. Description of Test Facility

Site Description

EMC Lab. : **Accredited by CNAS**
The Certificate Registration Number is L6666.
The Laboratory has been assessed and proved to be in compliance with CNAS-CL01:2018 (identical to ISO/IEC 17025:2017)

Accredited by FCC
Designation Number: CN1302
Test Firm Registration Number: 436491

Accredited by A2LA
The certificate is valid until May 31, 2023

Accredited by Industry Canada
The Conformity Assessment Body Identifier is CN0114

Name of Firm : EMTEK (NINGBO) CO., LTD.
Site Location : 1F Building 4, 1177#, Lingyun Road, Ningbo National Hi-Tech Zone, Ningbo, Zhejiang, China.

2.6. Description of Support Device

No.	Equipment	Trade name	Model	S/N	Power Cord
1	Wireless Load	/	5w/7.5w/10w	/	/

2.7. Measurement Uncertainty

The following measurement uncertainty levels have been estimated for tests performed on the apparatus:

Parameter	Uncertainty
Radio Frequency	±1x10^-5
Conducted Emissions Test	±2.0 dB
Radiated Emission Test	±2.0 dB
Occupied Bandwidth Test	±1.0 dB
Temperature	±0.5 ℃
Humidity	±3 %

Measurement Uncertainty for a level of Confidence of 95%

3. MEASURING DEVICE AND TEST EQUIPMENT

3.1. Conducted Emission Test Equipment

EQUIPMENT TYPE	MFR	MODEL NUMBER	SERIAL NUMBER	LAST CAL.	Cal. Interval.
Test Receiver	Rohde & Schwarz	ESCI	101108	July 08, 2021	1 Year
L.I.S.N	Rohde & Schwarz	ENV216	101193	July 08, 2021	1 Year
L.I.S.N	Schwarzbeck	NSLK 8126	8126-462	July 08, 2021	1 Year
Pulse Limiter	MTS-systemtechnik	IMP-136	2611115-001-0033	July 08, 2021	1 Year
RF Switching unit	Compliance Direction Systems Inc.	RSU-M2	38400	July 08, 2021	1 Year

3.2. For 3m Radiated Emission Measurement 9K-30M (3m chamber 1#)

Equipment	Manufacturer	Model No.	Serial No.	Last Cal.	Cal. Interval
EMI Test Receiver	Rohde & Schwarz	ESU	1302.6005.26	July 08, 2021	1 Year
Loop Antenna	Schwarzbeck	FMZB 1519	1519-012	July 08, 2021	1 Year
Cable	/	3M SF104-26.5	295838/4	July 08, 2021	1 Year
Cable	/	6M SF104-26.5	295840/4	July 08, 2021	1 Year

3.3. For 3m Radiated Emission Measurement 30M-1G (3m chamber 1#)

Equipment	Manufacturer	Model No.	Serial No.	Last Cal.	Cal. Interval
Spectrum Analyzer	Rohde & Schwarz	ESCI	101107	July 08, 2021	1 Year
EMI Test Receiver	Rohde & Schwarz	ESCI	101107	July 08, 2021	1 Year
Pre-Amplifier	CD	PAP-0203	22015	July 08, 2021	1 Year
Bilog Antenna	Schwarzbeck	VULB9163	9163-467	July 12, 2020	2 Year
Cable	HUBER + SUHNER	CBL3-NN-0.5 M	101216-2140500-2	July 08, 2021	1 Year
Cable	HUBER + SUHNER	CBL3-NN-3.0 M	101216-2143000-2	July 08, 2021	1 Year
Cable	HUBER + SUHNER	CBL3-NN-9.0 M	101216-2149000	July 08, 2021	1 Year

3.4. 20dB Bandwidth

Equipment	Manufacturer	Model No.	Serial No.	Last Cal.	Cal. Interval
Spectrum Analyzer	Agilent	E4407B	MY45107013	April 08, 2022	1 Year

4. 20DB BANDWIDTH

4.1. Test Procedure

Set to the maximum power setting and enable the EUT transmit continuously
Set RBW =1%-5%OBW
Set the video bandwidth (VBW) =3*RBW
Set Span= 10 kHz
Set Detector = Peak.
Set Trace mode = max hold.
Set Sweep = auto couple.
Measure and record the results in the test report.

4.2. Test Results

Temperature:	24℃	Test Date:	April 30, 2022
Humidity:	53 %	Test By:	XSJ

20dB Band=3.627 kHz

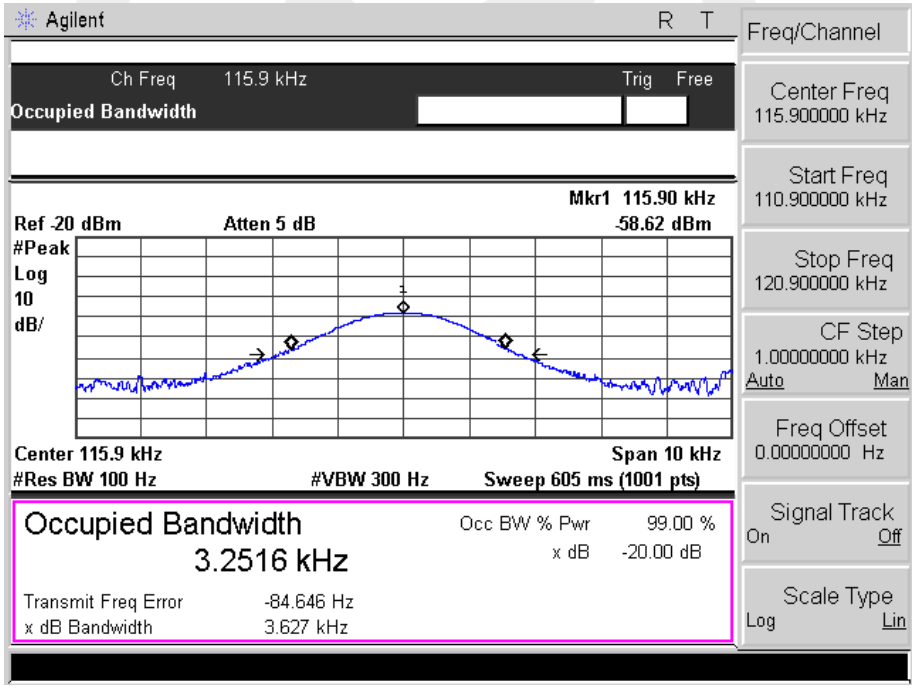

5. POWER LINE CONDUCTED EMISSION MEASUREMENT

5.1. Block Diagram of Test Setup

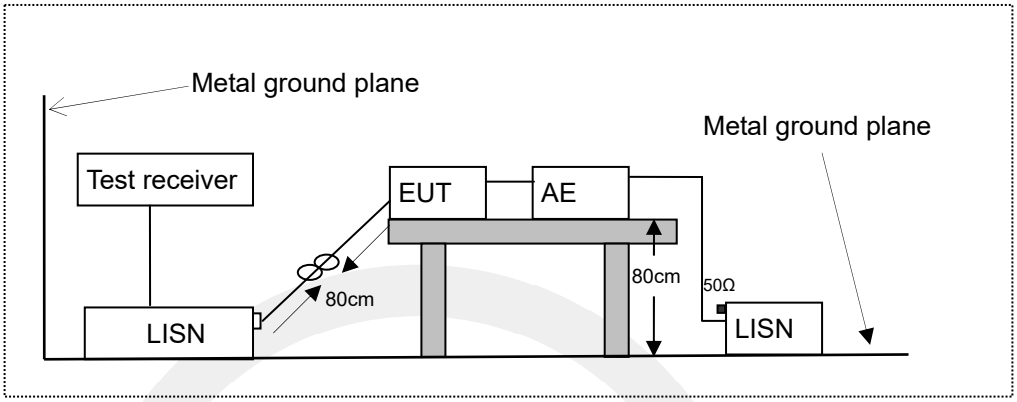

LISN: Line Impedance Stabilization Network
AE: Associated equipment
EUT: Equipment under test

5.2. Limits

FCC Part 15.207

Frequency (MHz)			Limit (dBμV)	
			Quasi-peak Level	Average Level
0.15	~	0.50	66.0 ~ 56.0 *	56.0 ~ 46.0 *
0.50	~	5.00	56.0	46.0
5.00	~	30.00	60.0	50.0
NOTE1-The lower limit shall apply at the transition frequencies. NOTE2-The limit decreases linearly with the logarithm of the frequency in the range 0.15MHz to 0.50MHz.				

5.3. Test Procedure

The EUT was placed on a desk 0.8 m height from the metal ground plane and 0.4 m from the conducting wall of the shielding room and it was kept at least 0.8 m from any other grounded conducting surface. The size of the table will nominally be 1.5 m x1.0 m.

The rear of the arrangement shall be flush with the back of the supporting tabletop unless that would not be possible or typical of normal use.

All units of equipment forming the system under test (includes the EUT as well as connected peripherals and associated equipment or devices) shall be arranged such that a nominal 0.1 m separation is achieved between the neighboring units.

Connect EUT to the power mains through a line impedance stabilization network (LISN). Where the mains cable supplied by the manufacturer is longer than 1 m, the excess should be folded at the centre into a bundle no longer than 0.4 m, so that its length is shortened to 1 m.

All the support units are connecting to the other LISN.

The LISN provides 50 ohm coupling impedance for the measuring instrument.

Both sides of AC line were checked for maximum conducted interference.

The frequency range from 150 kHz to 30 MHz was sweep.

Set the test-receiver system to quasi peak detect function and average detect function, and to measure the conducted emissions values.

Test results were obtained from the following equation:
Emission Level (dBμV) = LISN Factor (dB) + Cable Loss (dB) + Reading (dBμV)
Margin (dB) = Emission Level (dBμV) - Limit (dBμV)

5.4. Measuring Results

Pass.

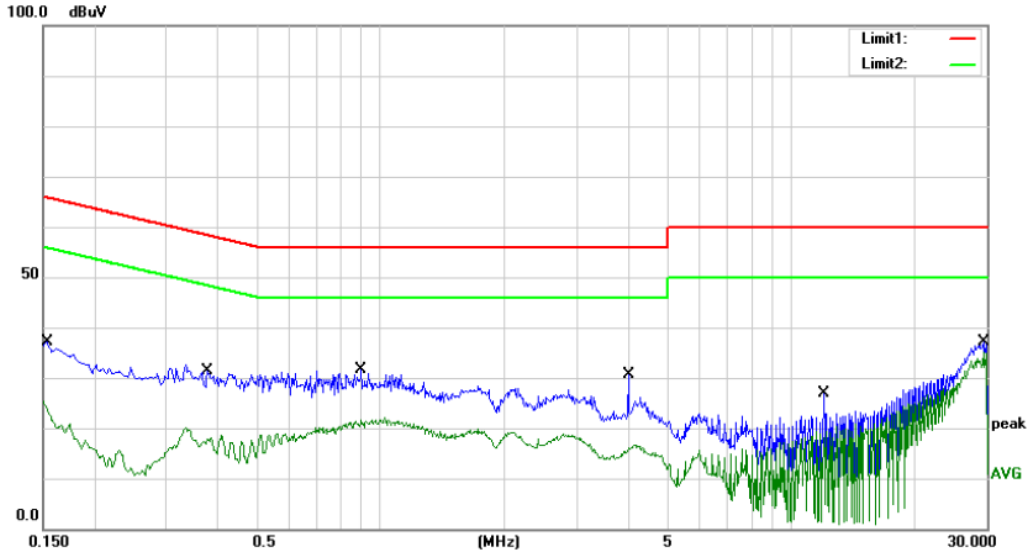

Site site #1 Phase: L1 Temperature: 24

Limit: (CE)FCC PART 15.207_QP Power: AC 120V/60Hz Humidity: 50 %

Mode: Full Load

Note:

No.	Mk.	Freq.	Reading Level	Correct Factor	Measure-ment	Limit	Over		
		MHz	dBuV	dB	dBuV	dBuV	dB	Detector	Comment
1		0.1524	26.90	10.10	37.00	65.87	-28.87	QP	
2		0.1524	14.10	10.10	24.20	55.87	-31.67	AVG	
3		0.3780	21.10	10.08	31.18	58.32	-27.14	QP	
4		0.3780	7.70	10.08	17.78	48.32	-30.54	AVG	
5		0.8980	21.50	10.01	31.51	56.00	-24.49	QP	
6		0.8980	10.90	10.01	20.91	46.00	-25.09	AVG	
7		4.0140	20.30	10.27	30.57	56.00	-25.43	QP	
8		4.0140	5.60	10.27	15.87	46.00	-30.13	AVG	
9		11.9980	16.40	10.51	26.91	60.00	-33.09	QP	
10		11.9980	7.60	10.51	18.11	50.00	-31.89	AVG	
11		29.5020	26.20	10.81	37.01	60.00	-22.99	QP	
12	*	29.5020	21.40	10.81	32.21	50.00	-17.79	AVG	

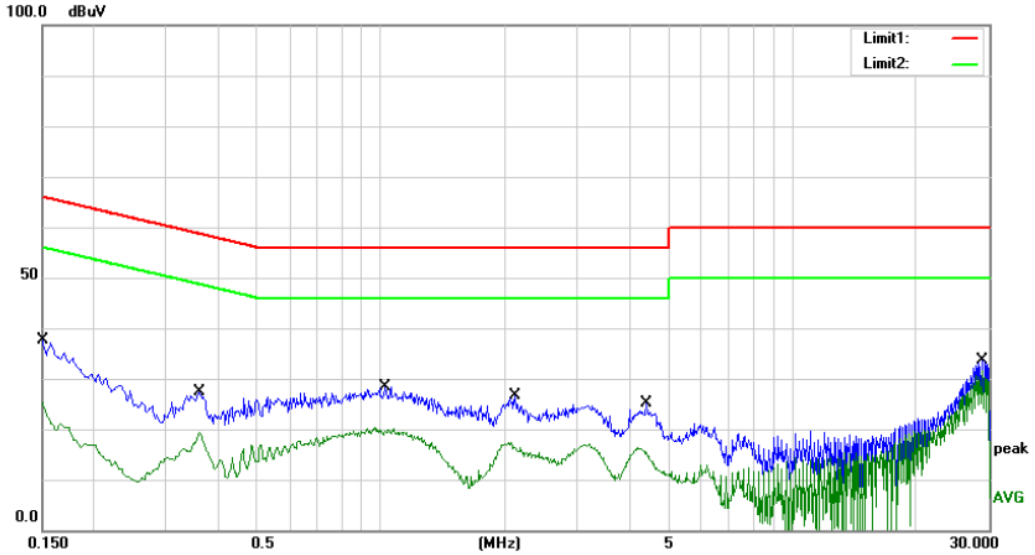

Site site #1 Phase: N Temperature: 24

Limit: (CE)FCC PART 15.207_QP Power: AC 120V/60Hz Humidity: 50 %

Mode: Full Load

Note:

No.	Mk.	Freq.	Reading Level	Correct Factor	Measure-ment	Limit	Over		
		MHz	dBuV	dB	dBuV	dBuV	dB	Detector	Comment
1		0.1500	27.60	10.07	37.67	66.00	-28.33	QP	
2		0.1500	15.40	10.07	25.47	56.00	-30.53	AVG	
3		0.3620	17.20	10.10	27.30	58.68	-31.38	QP	
4		0.3620	9.20	10.10	19.30	48.68	-29.38	AVG	
5		1.0220	18.40	9.86	28.26	56.00	-27.74	QP	
6		1.0220	9.80	9.86	19.66	46.00	-26.34	AVG	
7		2.1140	16.50	9.93	26.43	56.00	-29.57	QP	
8		2.1140	6.40	9.93	16.33	46.00	-29.67	AVG	
9		4.4100	15.00	10.23	25.23	56.00	-30.77	QP	
10		4.4100	5.10	10.23	15.33	46.00	-30.67	AVG	
11		28.8260	23.20	10.40	33.60	60.00	-26.40	QP	
12	*	28.8260	19.10	10.40	29.50	50.00	-20.50	AVG	

6. RADIATED EMISSION TEST

6.1.Measurement Procedure

1. The EUT was placed on a turn table which is 0.8m above ground plane.
2. Maximum procedure was performed on the six highest emissions to ensure EUT compliance.
3. And also, each emission was to be maximized by changing the polarization of receiving antenna both horizontal and vertical.
4. Repeat above procedures until all frequency measured were complete.
5. Use the following receiver/spectrum analyzer settings:

Span = wide enough to fully capture the emission being measured
RBW=200Hz for 9KHz to 150KHz,
RBW=9kHz for 150KHz to 30MHz,
RBW=120KHz for 30MHz to 1GHz
VBW ≥ 3*RBW
Sweep = auto
Detector function = QP
Trace = max hold

6.2.Test SET-UP (Block Diagram of Configuration)

(A)Radiated Emission Test Set-Up, Frequency Below 30MHz

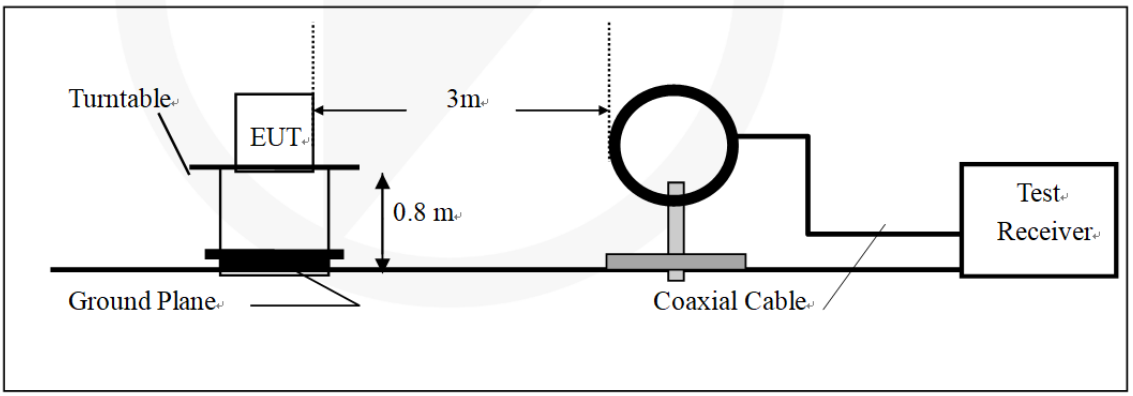

(B) Radiated Emission Test Set-Up, Frequency Below 1000MHz

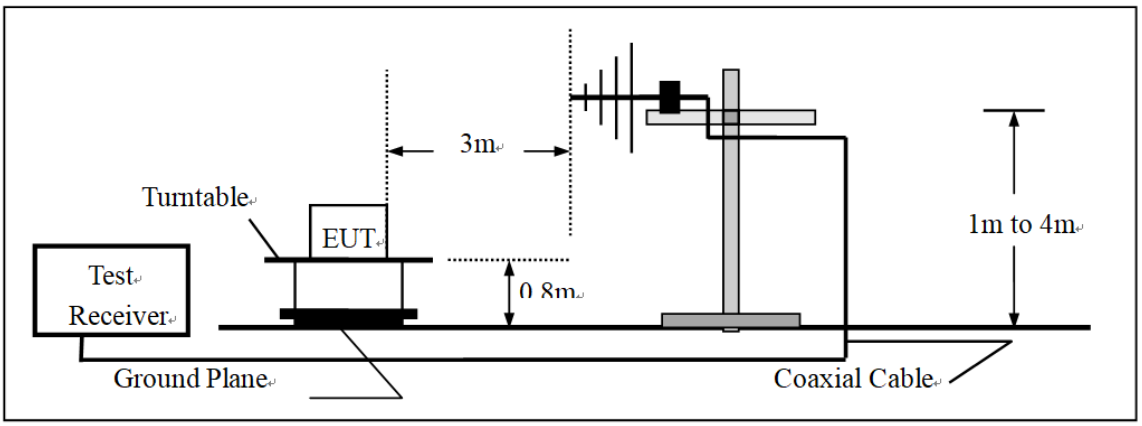

6.3.Radiated Emission Limit

The emissions from an intentional radiator shall not exceed the field strength levels specified in the following table 15.209(a):

FCC Part 15.209				
Frequency (MHz)	Field Strength Limitation		Field Strength Limitation Frequency tion at 3m Measurement Dist	
	(uV/m)	Dist	(uV/m)	(dBuV/m)
0.009 – 0.490	2400 / F(KHz)	300m	10000 * 2400/F(KHz)	20log 2400/F(KHz) + 80
0.490 – 1.705	24000 / F(KHz)	30m	100 * 24000/F(KHz)	20log 24000/F(KHz) + 40
1.705 – 30.00	30	30m	100* 30	20log 30 + 40
30.0 – 88.0	100	3m	100	20log 100
88.0 – 216.0	150	3m	150	20log 150
216.0 – 960.0	200	3m	200	20log 200
Above 960.0	500	3m	500	20log 500

15.205 Restricted bands of operation

MHz	MHz	MHz	GHz
0.090-0.110	16.42-16.423	399.9-410	4.5-5.15
10.495-0.505	16.69475-16.69525	608-614	5.35-5.46
2.1735-2.1905	16.80425-16.80475	960-1240	7.25-7.75
4.125-4.128	25.5-25.67	1300-1427	8.025-8.5
4.17725-4.17775	37.5-38.25	1435-1626.5	9.0-9.2
4.20725-4.20775	73-74.6	1645.5-1646.5	9.3-9.5
6.215-6.218	74.8-75.2	1660-1710	10.6-12.7
6.26775-6.26825	123-138	2200-2300	14.47-14.5
8.291-8.294	149.9-150.05	2310-2390	15.35-16.2
8.362-8.366	156.52475-156.52525	2483.5-2500	17.7-21.4
8.37625-8.38675	156.7-156.9	2690-2900	22.01-23.12
8.41425-8.41475	162.0125-167.17	3260-3267	23.6-24.0
12.29-12.293	167.72-173.2	3332-3339	31.2-31.8
12.51975-12.52025	240-285	3345.8-3358	36.43-36.5
12.57675-12.57725	322-335.4	3600-4400	(2)
13.36-13.41			

Remark: 1. Emission level in dBuV/m=20 log (uV/m)
2. Measurement was performed at an antenna to the closed point of EUT distance of meters.
3. Only spurious frequency is permitted to locate within the Restricted Bands specified in provision of ξ 15.205, and the emissions located in restricted bands also comply with 15.209 limit.

6.4.Measurement Result

9KHz-150KHz:

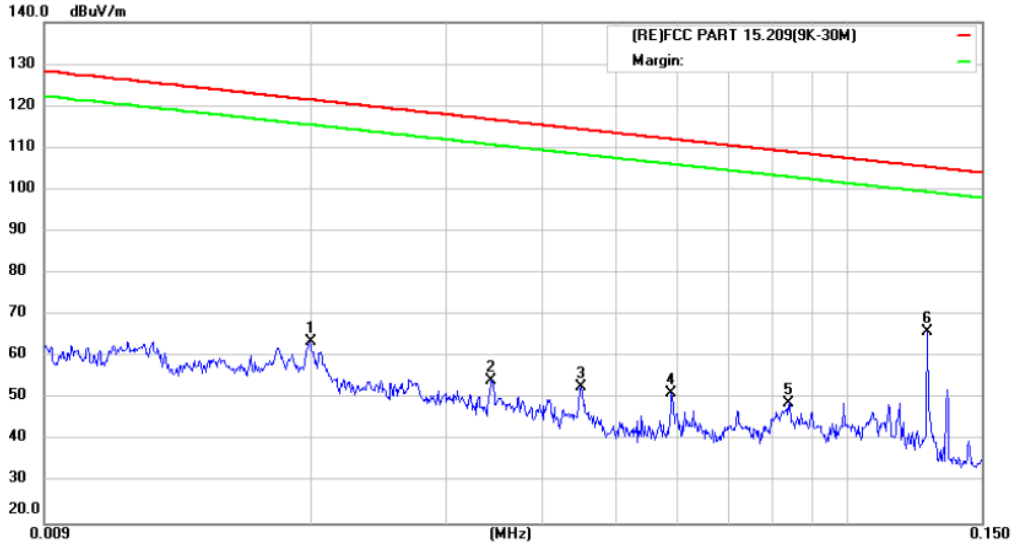

Site Radiated Emission 3m #1 Polarization: Temperature: 24

Limit: (RE)FCC PART 15.209(9K-30M) Power: AC 120V/60Hz Humidity: 48 %

Mode:Full Load

Note:

No.	Mk.	Freq.	Reading Level	Correct Factor	Measure-ment	Limit	Over		Antenna Height	Table Degree	
		MHz	dBuV	dB	dBuV/m	dBuV/m	dB	Detector	cm	degree	Comment
1		0.0200	42.95	20.59	63.54	121.41	-57.87	peak			
2		0.0343	33.75	20.63	54.38	116.76	-62.38	peak			
3		0.0449	32.07	20.74	52.81	114.43	-61.62	peak			
4		0.0589	30.49	20.75	51.24	112.09	-60.85	peak			
5		0.0840	28.13	20.69	48.82	109.02	-60.20	peak			
6	*	0.1274	45.61	20.36	65.97	105.43	-39.46	peak			

150KHz-30MHz:

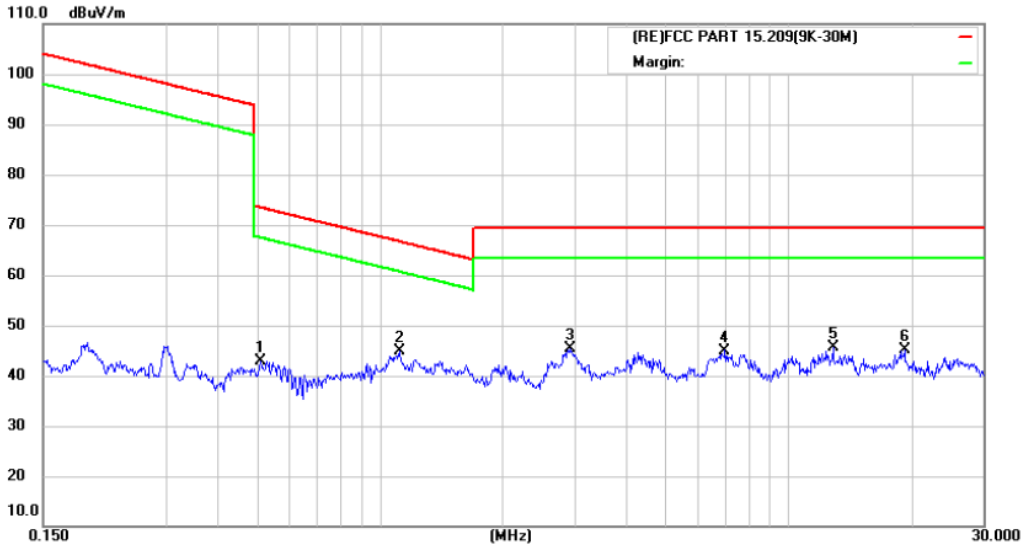

Site Radiated Emission 3m #1 Polarization: Temperature: 24

Limit: (RE)FCC PART 15.209(9K-30M) Power: AC 120V/60Hz Humidity: 48 %

Mode:Full Load

Note:

No.	Mk.	Freq.	Reading Level	Correct Factor	Measure-ment	Limit	Over		Antenna Height	Table Degree	
		MHz	dBuV	dB	dBuV/m	dBuV/m	dB	Detector	cm	degree	Comment
1		0.5100	21.80	21.00	42.80	73.45	-30.65	QP			
2	*	1.1170	23.73	21.07	44.80	66.66	-21.86	QP			
3		2.9150	24.65	20.65	45.30	69.50	-24.20	QP			
4		6.9877	24.42	20.58	45.00	69.50	-24.50	QP			
5		12.8513	25.37	20.23	45.60	69.50	-23.90	QP			
6		19.2236	24.80	20.30	45.10	69.50	-24.40	QP			

30MHz-1GHz:

Site Radiated Emission 3m #1 Polarization: ***Horizontal*** Temperature: 24

Limit: FCC Part15 Class B 3M Radiation Power: AC 120V/60Hz Humidity: 55 %

Mode:Full Load

Note:

No.	Mk.	Freq.	Reading Level	Correct Factor	Measure-ment	Limit	Over		Antenna Height	Table Degree	
		MHz	dBuV	dB	dBuV/m	dBuV/m	dB	Detector	cm	degree	Comment
1		243.3772	61.10	-22.60	38.50	46.00	-7.50	QP			
2	*	289.0021	62.90	-20.60	42.30	46.00	-3.70	QP			
3		338.4001	55.30	-18.90	36.40	46.00	-9.60	QP			
4		390.7226	48.46	-18.16	30.30	46.00	-15.70	QP			
5		440.1963	48.10	-18.00	30.10	46.00	-15.90	QP			
6		533.8321	43.93	-14.43	29.50	46.00	-16.50	QP			

Site Radiated Emission 3m #1 Polarization: ***Vertical*** Temperature: 24

Limit: FCC Part15 Class B 3M Radiation Power: AC 120V/60Hz Humidity: 55 %

Mode:Full Load

Note:

No.	Mk.	Freq.	Reading Level	Correct Factor	Measure-ment	Limit	Over		Antenna Height	Table Degree	
		MHz	dBuV	dB	dBuV/m	dBuV/m	dB	Detector	cm	degree	Comment
1		151.0666	58.30	-26.40	31.90	43.50	-11.60	QP			
2		197.8928	59.15	-23.55	35.60	43.50	-7.90	QP			
3	*	242.5253	62.79	-22.69	40.10	46.00	-5.90	QP			
4		289.0021	60.00	-20.60	39.40	46.00	-6.60	QP			
5		338.4001	56.50	-18.90	37.60	46.00	-8.40	QP			
6		389.3549	53.31	-18.11	35.20	46.00	-10.80	QP			

7. ANNTENNA APPLICATION

7.1. Antenna Requirement

Standard	Requirement
FCC CRF Part 15.203	An intentional radiator shall be designed to ensure that no antenna other than that furnished by the responsible party shall be used with the device. The use of a permanently attached antenna or of an antenna that uses a unique coupling to the intentional radiator shall be considered sufficient to comply with the provisions of this section. The manufacturer may design the unit so that a broken antenna can be replaced by the user, but the use of a standard antenna jack or electrical connector is prohibited. This requirement does not apply to carrier current devices or to devices operated under the provisions of §15.211, §15.213, §15.217, §15.219, or §15.221. Further, this requirement does not apply to intentional radiators that must be professionally installed, such as perimeter protection systems and some field disturbance sensors, or to other intentional radiators which, in accordance with §15.31(d), must be measured at the installation site. However, the installer shall be responsible for ensuring that the proper antenna is employed so that the limits in this part are not exceeded.

For intentional device, according to FCC 47 CFR Section 15.203, an intentional radiator shall be designed to ensure that no antenna other than that furnished by the responsible party shall be used with the device.

7.2. Result

Pass

Note: The EUT has 1 antenna: The internal antenna gain is 0 dBi;

☒ Antenna use a permanently attached antenna which is not replaceable.
☐ Not using a standard antenna jack or electrical connector for antenna replacement
☐ The antenna has to be professionally installed (please provide method of installation)
which in accordance to section 15.203, please refer to the internal photos.

*** End of Report ***

声 明
Statement

1. 本报告无授权批准人签字及“检验报告专用章”无效；
   This report will be void without authorized signature or special seal for testing report.

2. 未经许可本报告不得部分复制；
   This report shall not be copied partly without authorization.

3. 本报告的检测结果仅对送测样品有效，委托方对样品的代表性和资料的真实性负责；
   The test results or observations are applicable only to tested sample. Client shall be responsible for representativeness of the sample and authenticity of the material.

4. 本检测报告中检测项目标注有特殊符号则该项目不在资质认定范围内，仅作为客户委托、科研、教学或内部质量控制等目的使用；
   The observations or tests with special mark fall outside the scope of accreditation, and are only used for purpose of commission, research, training, internal quality control etc.

5. 本检测报告以实测值进行符合性判定，未考虑不确定度所带来的风险，本实验室不承担相关责任，特别约定、标准或规范中有明确规定的除外；
   The test results or observations are provided in accordance with measured value, without taking risks caused by uncertainty into account. Without explicit stipulation in special agreements, standards or regulations, EMTEK shall not assume any responsibility.

6. 对本检测报告若有异议，请于收到报告之日起 20 日内提出；
   Objections shall be raised within 20 days from the date receiving the report.