Mobile Video Recorder

User's Manual
Installation Manual

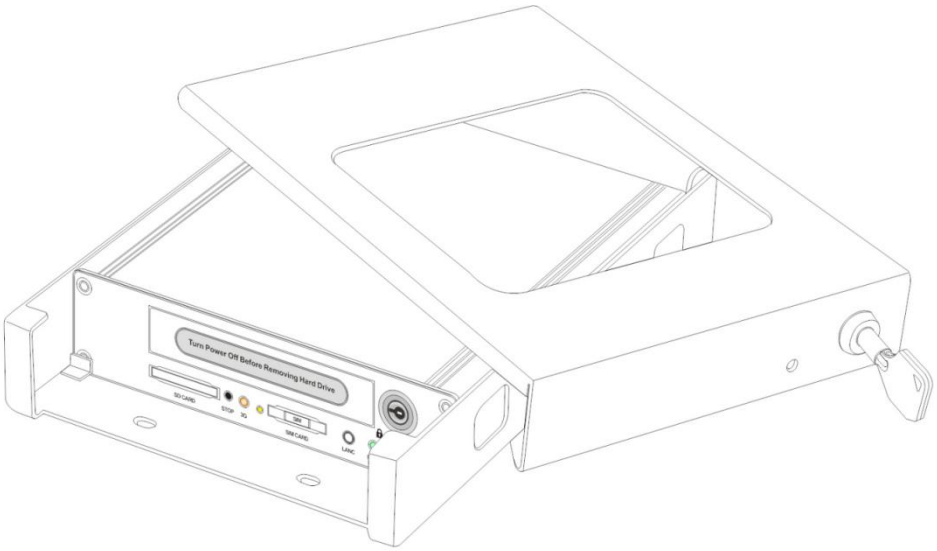

Thank you for using our Mobile HDD Video Recorder. This manual is applicable for Mobile HDD Video Recorder, Please read this User's Manual carefully to ensure that you can use the device correctly and safely. The contents of this manual are subject to be changed without notice.

FCC Caution.

This device complies with part 15 of the FCC Rules. Operation is subject to the following two conditions: (1) This device may not cause harmful interference, and (2) this device must accept any interference received, including interference that may cause undesired operation.

Any Changes or modifications not expressly approved by the party responsible for compliance could void the user's authority to operate the equipment.

Note: This equipment has been tested and found to comply with the limits for a Class B digital device, pursuant to part 15 of the FCC Rules. These limits are designed to provide reasonable protection against harmful interference in a residential installation. This equipment generates uses and can radiate radio frequency energy and, if not installed and used in accordance with the instructions, may cause harmful interference to radio communications. However, there is no guarantee that interference will not occur in a particular installation. If this equipment does cause harmful interference to radio or television reception, which can be determined by turning the equipment off and on, the user is encouraged to try to correct the interference by one or more of the following measures:
-Reorient or relocate the receiving antenna.
-Increase the separation between the equipment and receiver.
-Connect the equipment into an outlet on a circuit different from that to which the receiver is connected.
-Consult the dealer or an experienced radio/TV technician for help.

***RF warning for Mobile device:**
This equipment complies with FCC radiation exposure limits set forth for an uncontrolled environment. This equipment should be installed and operated with minimum distance 20cm between the radiator & your body.

Warning

This device is NOT of waterproof; to prevent it from any accident of fire or electric shock, please do NOT put any container with water on the device or nearby. Do not expose the device to moisture, or extreme temperatures.

This lightning flash with arrow symbol within an equilateral triangle is intended to alert users that there might be uninsulated dangerous voltage which may cause electric shock to person when the cover of device is opened.

To prevent from the risk of electric shock, do NOT remove top cover or back cover. There is NO user-serviceable part inside. Ask for service from qualified maintenance man.

The exclamation point within an equilateral triangle is intended to alert users the important operating and maintenance(servicing) instructions in this manual.

Important notice:

1. Please read over all cautions.
2. Please keep this manual for reference in the future.
3. Please notice all warning information.
4. Please strictly follow the instructions in this manual while operating.
5. Please NEVER put this device under the place which is easily poured by water.
6. Please do NOT use abrasive chemicals, cleaning solvents or strong detergents to clean the device. Wipe the device with a soft and dry cloth.
7. Please do NOT get the gate of airiness heat exchange closed.
8. Please leave the device far away from hot and high temperature environment.
9. Install the device with the accessories coming with it.
10. Please take care when moving the device, make sure of security, and avoid being damaged by dropping from high place.
11. Call for qualified maintenance man to repair when needed.
12. The device can only be installed horizontally. Installed vertically or out of the horizontal could hurt person or damage the device or/and its parts.

TABLE OF CONTENTS

1. General Introduction 5
2. Product Description 7
2.2 Rear Panel 8
3. Start to use mobile DVR 9
3.1 Install and fix the cradle 9
3.2 Install the hard disk 9
3.3 Install the top cover of the cradle 10
3.4 Connect with cameras 10
3.5 Connect with power 11
3.6 GPS connection (Optional) 12
3.7 Connect with control panel (control panel is optional) 13
3.8 Connect with monitor 14
3.9 Format the disk 17
3.10 Setting up the cameras 17
3.11 Record Setting 19
3.12 Power Setting 21
3.13 Motor Setting 22
3.14 GPS Setting 23
3.15 G-Sensor 23
3.16 3G/4G Setting 24
3.17 WIFI Setting 25
3.18 Network Setting 25
3.19 Server Settings & GPS Server Settings 26
3.20 System Setting 27
3.21 Alarm Setting 28
3.22 Set Date and Time 29
3.23 Output Setting & PTZ Setting 29
3.24 Record Play back 30
3.25 System Information 31
3.26 System Upgrade and Log 31
4. WEB setting page 32
5. Specification 33
6. Trouble Shooting 35
7. Packing List 38

1. General Introduction

The Mobile HDD video recorder is a compact, full-featured recording system that uses a hard disc as a storage device. The recorder unit and associated accessories are specifically designed for operation in a mobile environment.

The Mobile HDD video record system, used in conjunction with the cameras, records with full-motion video and audio data to a removable hard disc. The firmware-driven menu system provides a simple method for configuring the unit's operation as well as searching for and viewing previously recorded AV records.

Regulatory Compliance

The Mobile Video Recorder complies with CE and Part 15 of the FCC interference limits for Class B digital devices FOR HOME OR OFFICE USE. These limits are designed to provide reasonable protection against harmful interference. Operation of this device is subject to the following conditions: (1) This device may not cause harmful interference, and (2) this device must accept any interference received, including interference that may cause undesired operation.

Product Description

Product Main Features

- Embedded operating system, assuring reliability and system integrity.
- Records up to nine channels of full-motion color video with corresponding audio tracks.
- H.264 High Profile video compression.
- Lockable security enclosure.
- Front panel USB2.0 port for recording to a flash card as an optional storage device.
- Ignition sense that provides DVR power-on in recording mode when the bus is started.
- Power-off delay record when the bus is shut-down with operator-selected delay times.
- Support SAMBA function to share files.

Video And Audio

- H.264 High Profile video compression, real time recording up to 30 fps. Frame rate adjustable for each channel.
- Audio compression: G.711 codec. This codec offers high compression with high quality audio.
- Multi-channel 1080P resolution for analog camera.
- Local video and audio real time playback.

GPS Time Synchronization & Time Zone

- Synchronize the DVR system time with GPS automatically
- Support All Time Zones Worldwide
- Support DST (Daylight Saving Time)

Power Management

- Reliable power management, wide voltage: +12VDC~+32VDC; The power input is protected against short positive transient (1500 watts peak pulse power capability with a 10x1000 us waveform); The power input is protected against negative voltage. Applicable for vehicles with +12V or +24V battery.

- The recorder provides each camera with stable +12V DC power; DVR can protect the internal components damage from short circuit.
- Can use ignition to control the power.
- DVR can monitor battery voltage after Ignition off, and auto into sleep mode when voltage is bellow specified level.

Recording mode

- Continuous record.
- Support schedule recording.
- Support alarm recording.
- Support motion detection recording.

Speed and Vehicle status recording

- Record vehicle speed and car id with audio and video.
- Support 3 sensors, can be connected to return, right turn, left turn light etc.
- Over-speed alarm.
- Specified screen can be full screen displayed when return(or left, right) sensor triggered.

Double Anti-vibration Mechanical Proof For HDD

- Patent pending anti-vibration design, full floating construction with rubber, 100% mechanical protection for HDD.
- Removable HDD box, convenient HDD collection for recorded content browse..

Hard Disk

- Support hard disk up to 6T. Please note, the inside height of the hard disk case is 10.2mm, please select the hard disk whose height is less than 9.5mm.

2. Product Description

2.1 Front Panel

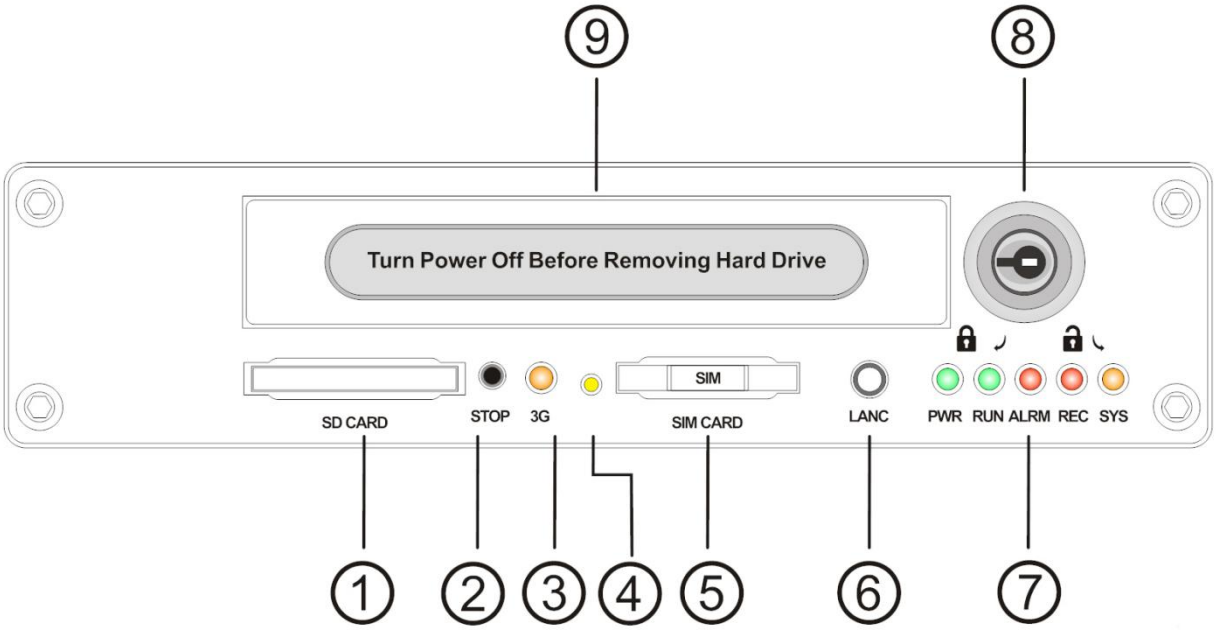

1：SD Card Slot
2：Stop Button
3：4G/3G Indicator (only applicable for 4G/3G model)
4：SIM Card Eject Button (only applicable for 4G/3G model)
5：SIM Card Slot (only applicable for 4G/3G model)
6：Control Panel Connector
7：Light Indicator (1:power 2:run; 3:alarm 4:record; 5:system）
8：Lock (also used as power switch)
9：Hard Disk Case

Get to know the status of DVR system by the indication of LED lights:

1. PWR (Green)	2. RUN (Green)	Description
Always on	Blinking	DVR is on & running
Blinking with RUN by turns	Blinking with PWR by turns	Ignition is not enabled and DVR is OFF.
Blinking together with RUN	Blinking together with PWR	Ignition signal is not enabled & DVR is running. Unit will turn OFF when "Delay Time" setting is reached.
Blinking every 3 seconds	Off	DVR is off. The lock is in off state and user can use key to turn on the DVR

3. Alarm(Red)	Description

Always On	DVR has alarm report(Over speed, e.g.)
Off	No alarm

4. REC(Red)	Description
Always On	Disk in use, Recording or Playing。
Off	Disk not in use

5. System(Yellow):	Description
Always On	All cameras recording together
Blinking	Blinking every 2 seconds. The number of blinks is the number of cameras not connected. For example, if it blinks 3 times, it means there are 3 cameras not connected.
Off	Not recording and no cameras connected.

2.2 Rear Panel

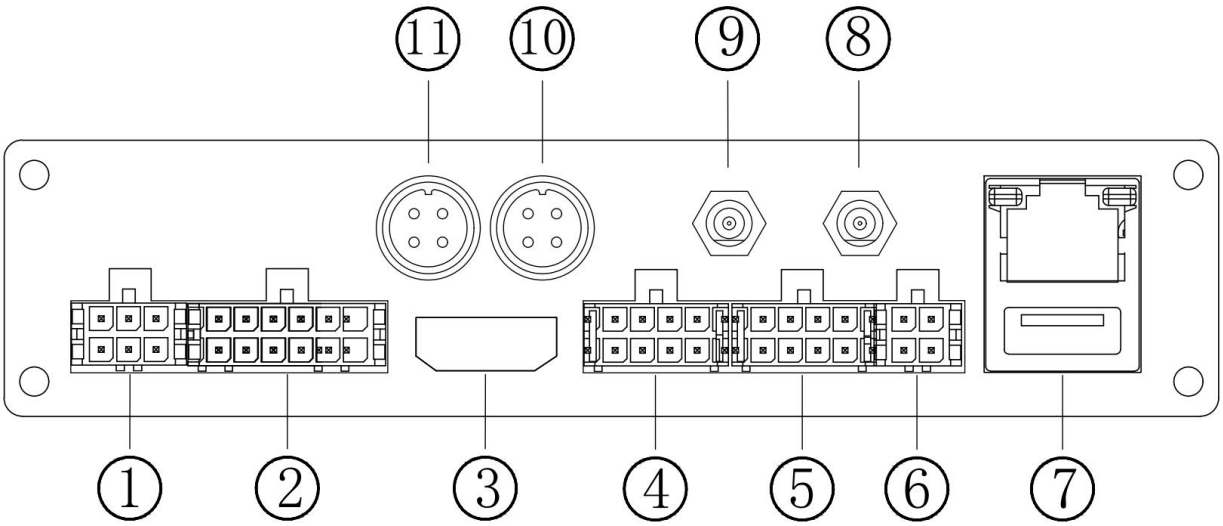

①: Power (including Power, Ground, Ignition).
②: 3 sensors, 1 RS232 (For GPS), 12V DC output, 1 LANC input
③: HDMI Out
④: Camera 1 and 2(including power for camera)
⑤: Camera 3 and 4(including power for camera)
⑥: CVBS Video and Audio Out (including power for monitor)
⑦: USB Connector and RJ45 port
⑧: WIFI antenna
⑨:4G/3G antenna
⑩/⑪: Camera 5 and 6(including power for camera)

Note: The number of input-camera and the back-panel layout would be a little different depends on the different model of DVR.

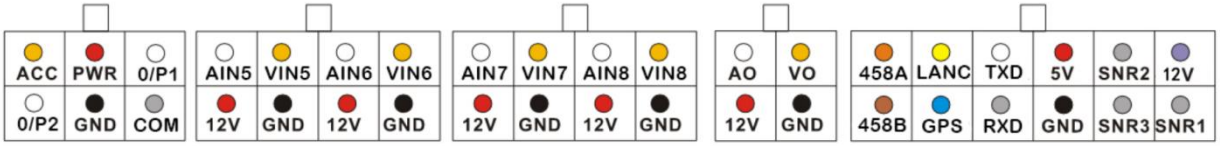

3. Start to use mobile DVR

Note: pictures showed below are only for reference, please make the real product as the standard.

3.1 Install and fix the cradle

Use a power drill and screws supplied to fix cradle in the right place inside the vehicle.

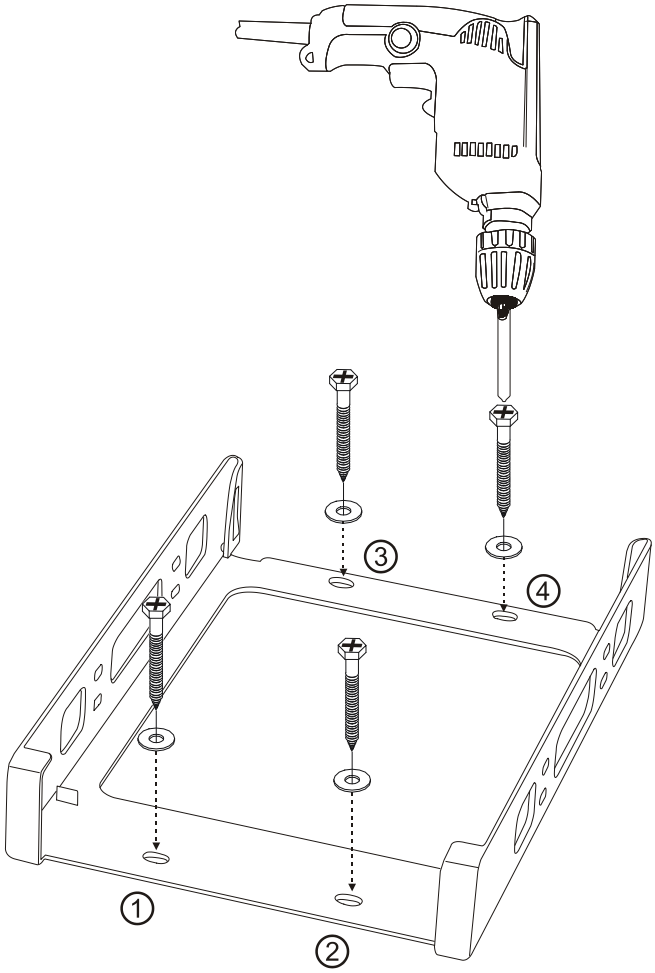

3.2 Install the hard disk

Put the hard disk into the hard disk case and insert it into the DVR. Then use the key to lock the hard disk.

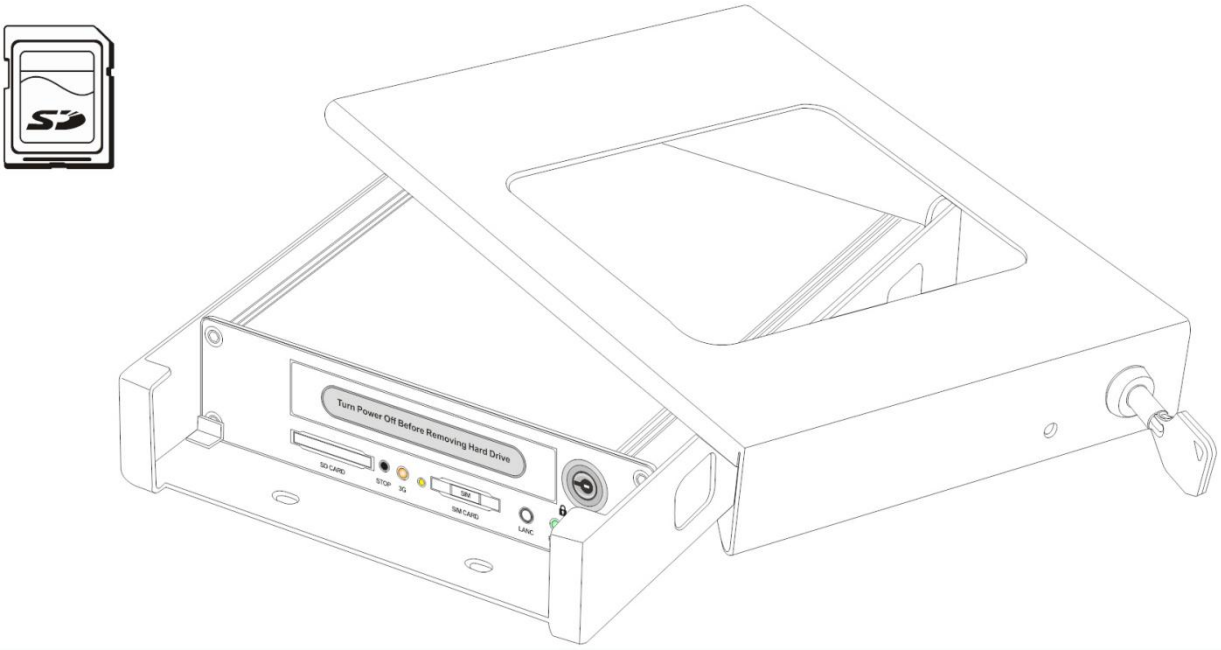

3.3 Install the top cover of the cradle

Put the top cover into the cradle and use the lock to secure it.

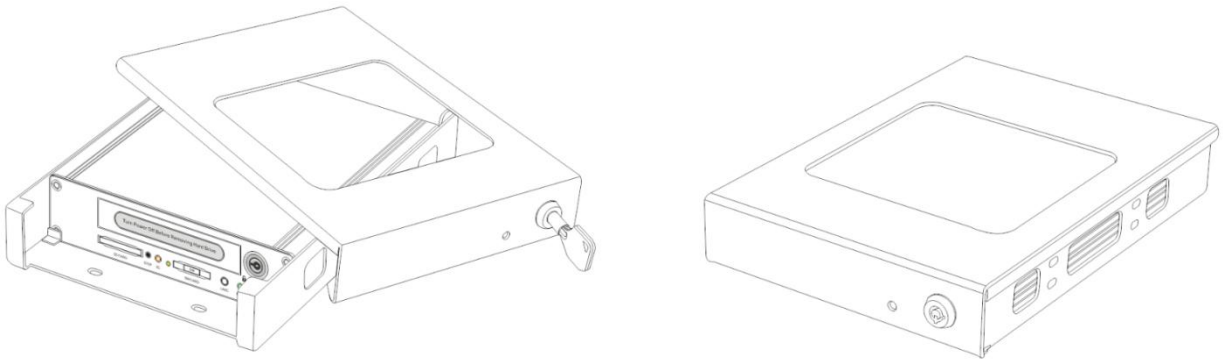

3.4 Connect with cameras

The DVR can connect with the analog cameras (including AHD cameras), the analog cameras can be connected using the BNC connectors or 4-pin threaded connected in the cable we provided.

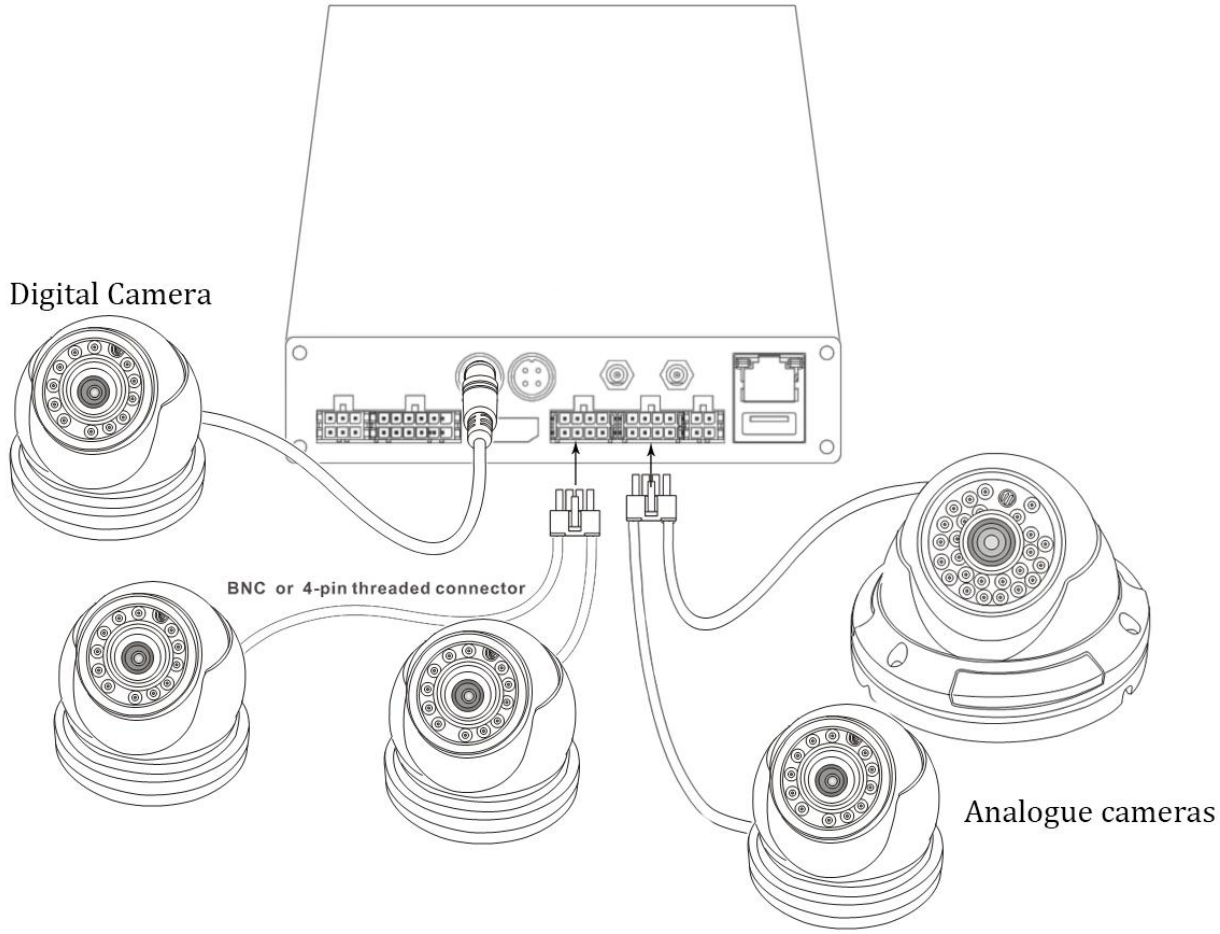

4-pin threaded connector definition:

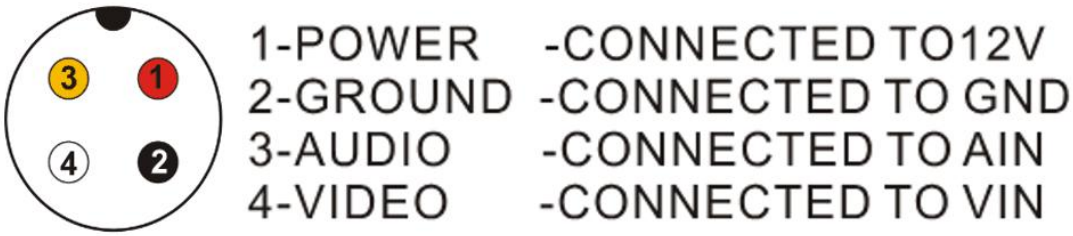

If you are using the 4-pin threaded connector, the camera should have 4-pin female connector to match this cable. The DVR unit will provide stable 12V DC power to each camera, and record video and audio (if the camera is with microphone built-in). This type of connection cable is highly recommended. It saves both installation time and cost.

3.5 Connect with power

Connect the red wire to the positive pole of the battery and connect the black wire to the negative pole of the battery. Connect the yellow wire to the ignition signal of the vehicle. The fuse should be connected to the positive pole and red wire. Please note: the fuse is used for protecting the battery,

so the fuse should be placed near to the battery positive pole.

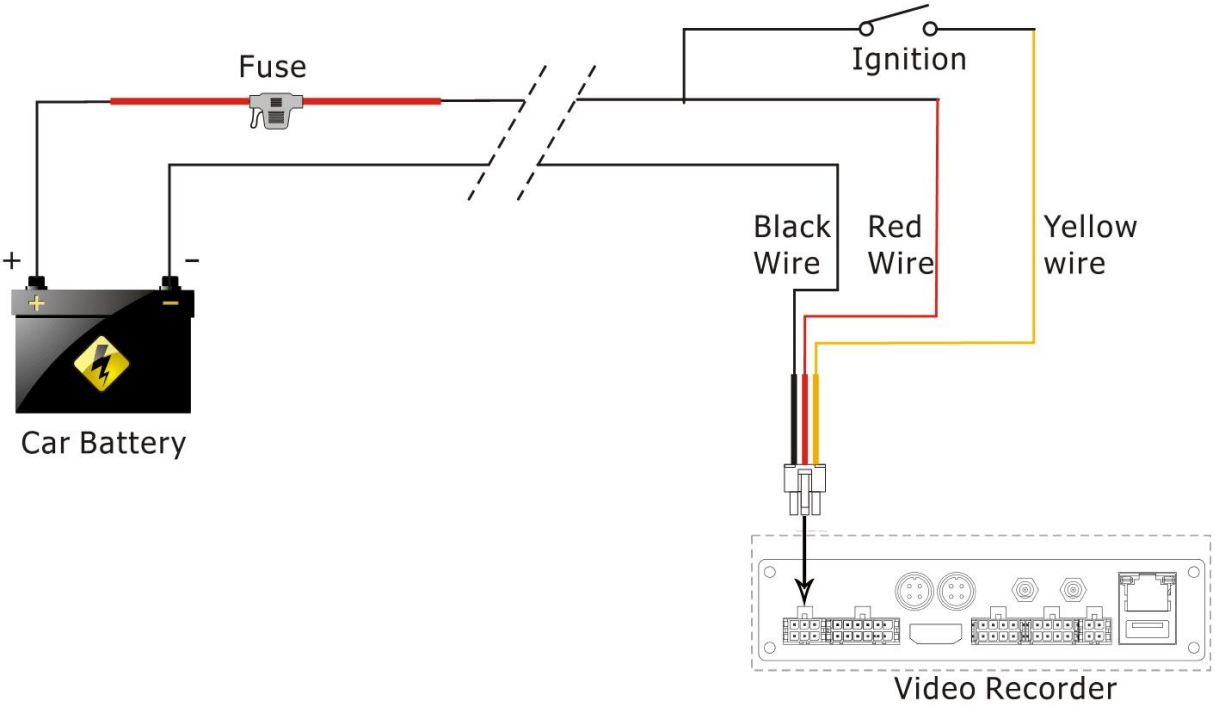

NOTE

1. The DVR uses DC power input, please be very careful when connecting to the "+" and "-" of the power supply.
2. Wide voltage range of 12V-32V for the DVR. The DVR may be damaged if the voltage comes too high. And the DVR may not work if the voltage comes too low.
3. Power of the DVR should be supplied by the car battery.
4. Power consumption of the DVR can be 60W when the engine starts. All the cables for connecting from power to the DVR should be thick enough for current over 5 Amperes.
5. To protect the battery from being damaged of short circuit, the fuse should be placed very closed to the "+" pole of car battery.

3.6 GPS connection (Optional)

Connect the GPS receiver to the GPS connector on the cable harness.

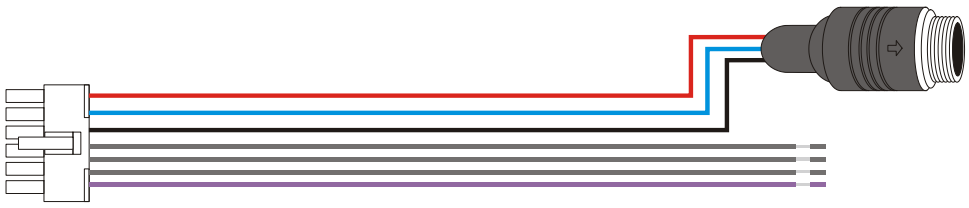

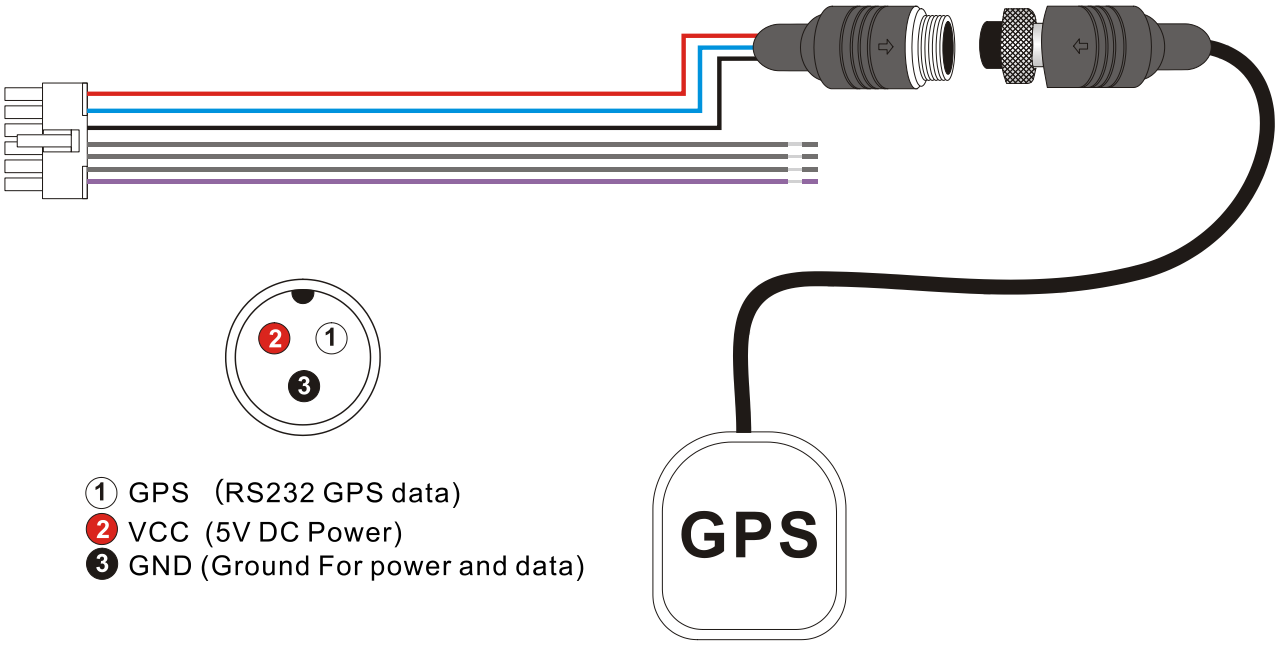

3.7 Connect with control panel (control panel is optional)

The control panel can be used as panic button, or used for toggle screen display among different cameras. The control can also show the status of the DVR, including error status. When the DVR is installed in a place which is hard to reach, the control panel can be installed in a place which is easy for use to check the DVR.

The control panel have one button and three LED light (yellow, red and green light).

The button can work as either one of the following three functions:

Panic button: The button can be used as panic button. When this button is pressed, the recording will be marked as alarm recording and this record file will not be overwritten. If the DVR support 4G function, it can send alarm message to control center.

Start/Stop record: The button can be used as Start/Stop record button. The record status can be seen on the LED light indicator.

Toggle cameras: The button can be used for toggling among cameras.

The status indicator will show the status of the DVR, as following table:

TYPE	STATUS	DESCRIPTION
RECORD	Green Light Always On	Recording
	Green Light Blinking	No recording
POWER	Yellow Light Always On	DVR is on
ERROR	Red Light Blinking Fast	Panic button is pressed
	Red Light Blinking Slowly	No disk found

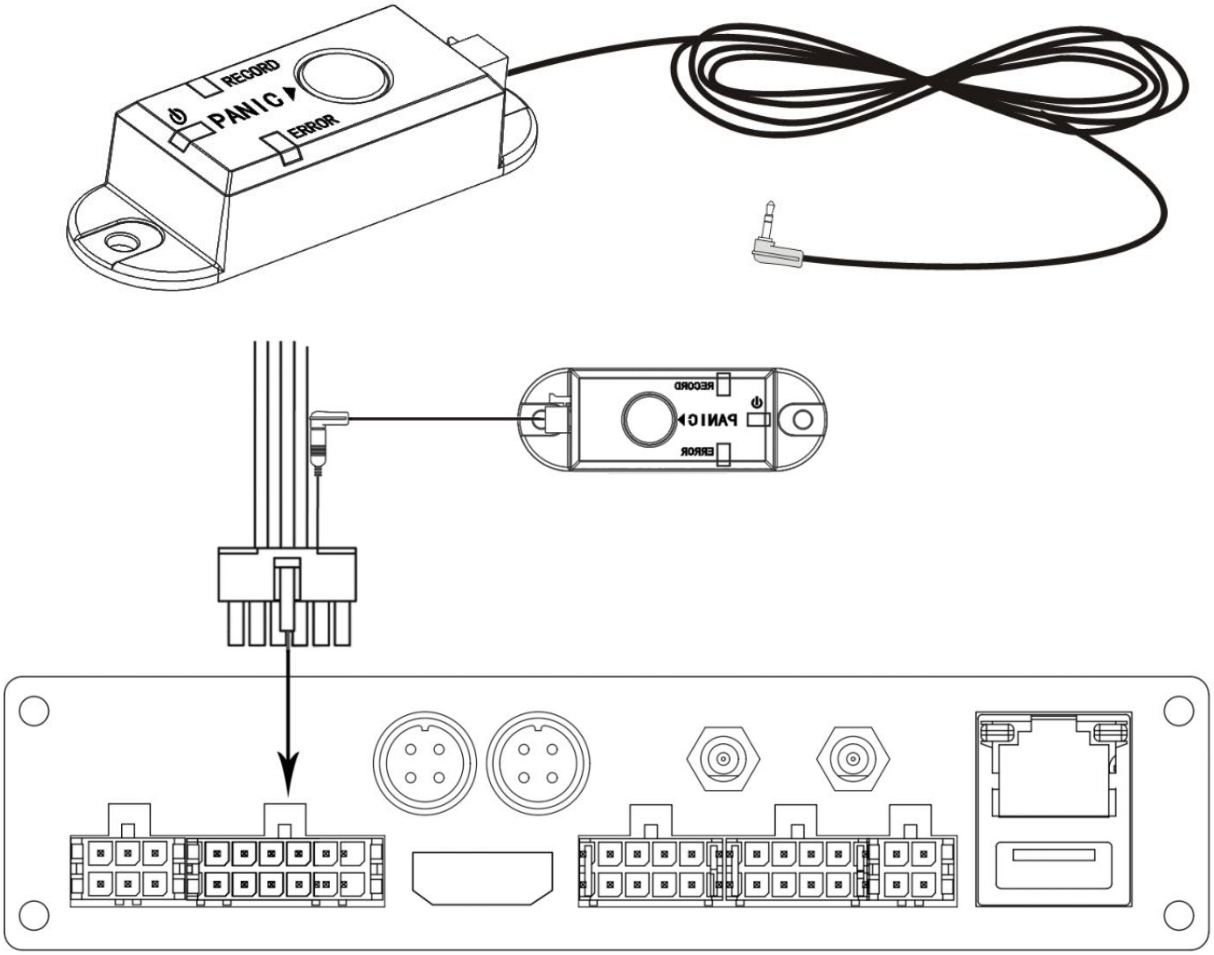

3.8 Connect with monitor

3.8.1 Connect the DVR with monitor

DVR can be connected with two types of monitor, DVR can connect with these two monitors at the same time

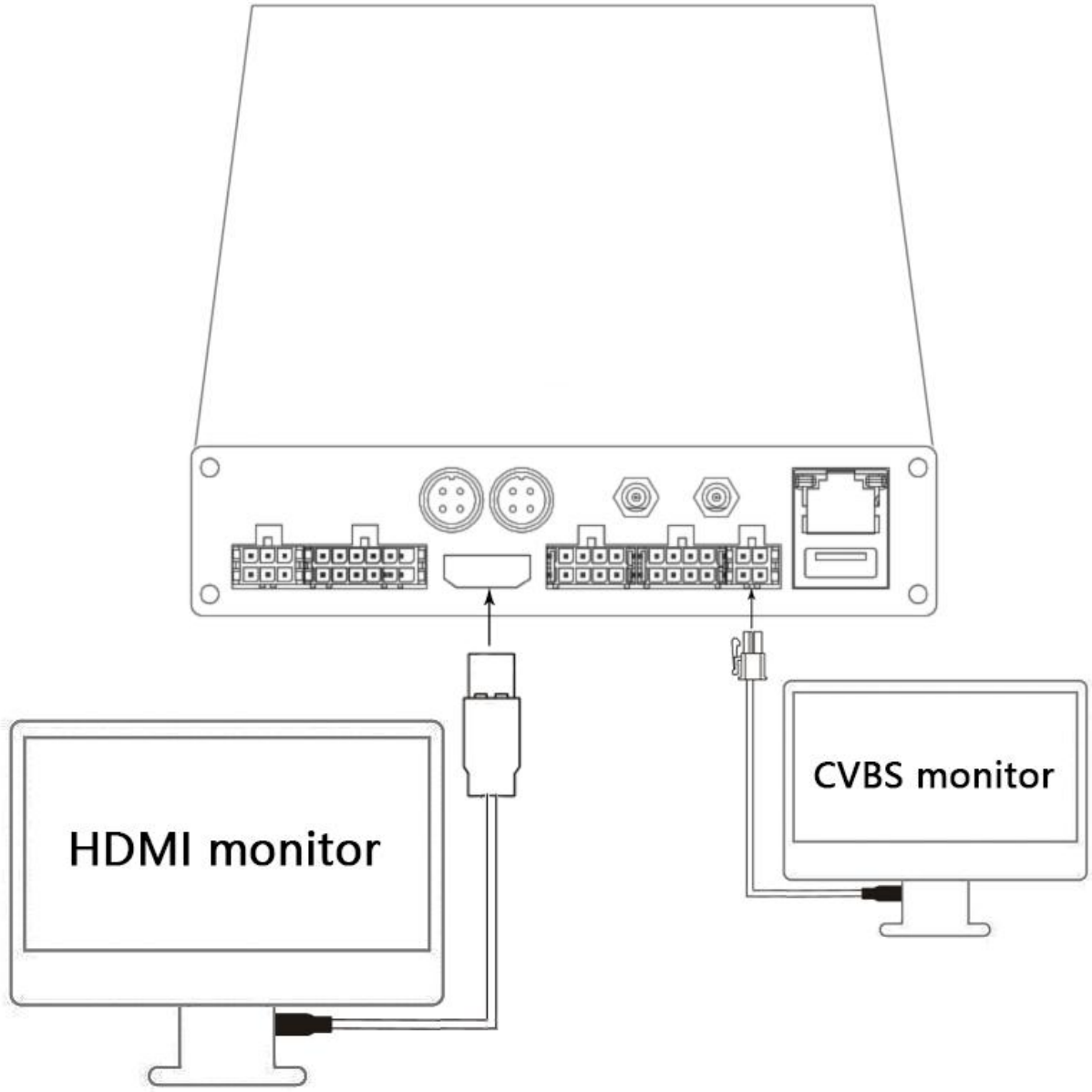

1) Connect with HDMI monitor

Use the HDMI cable to connect the HDMI monitor with DVR's HDMI connector, when the DVR is turned on, it will show the DVR output.

2) Connect with CVBS monitor (composite video)

Use the composite video cable to connect the monitor with DVR. When the DVR is turned on, it will show the DVR output.

Note: The default output device is HDMI, if you connect a CVBS monitor, you should get into the setting to change the setting to CVBS("System Setting"/ "Output Setting"/ "Output Device").

3.8.2 Preview Cameras

1) Use mouse to toggle among cameras

When the DVR is turned on, the DVR will display preview screen automatically. User can connect a mouse to the USB in the front panel, then right click the mouse. Choose the screen mode in the prompted menu. You can also choose one camera as full screen mode by double clicking the camera.

***Note: Right click the mouse is equal to click "Return" button when you operate DVR's Menu.**

2) Use the control panel to toggle the screen or channel

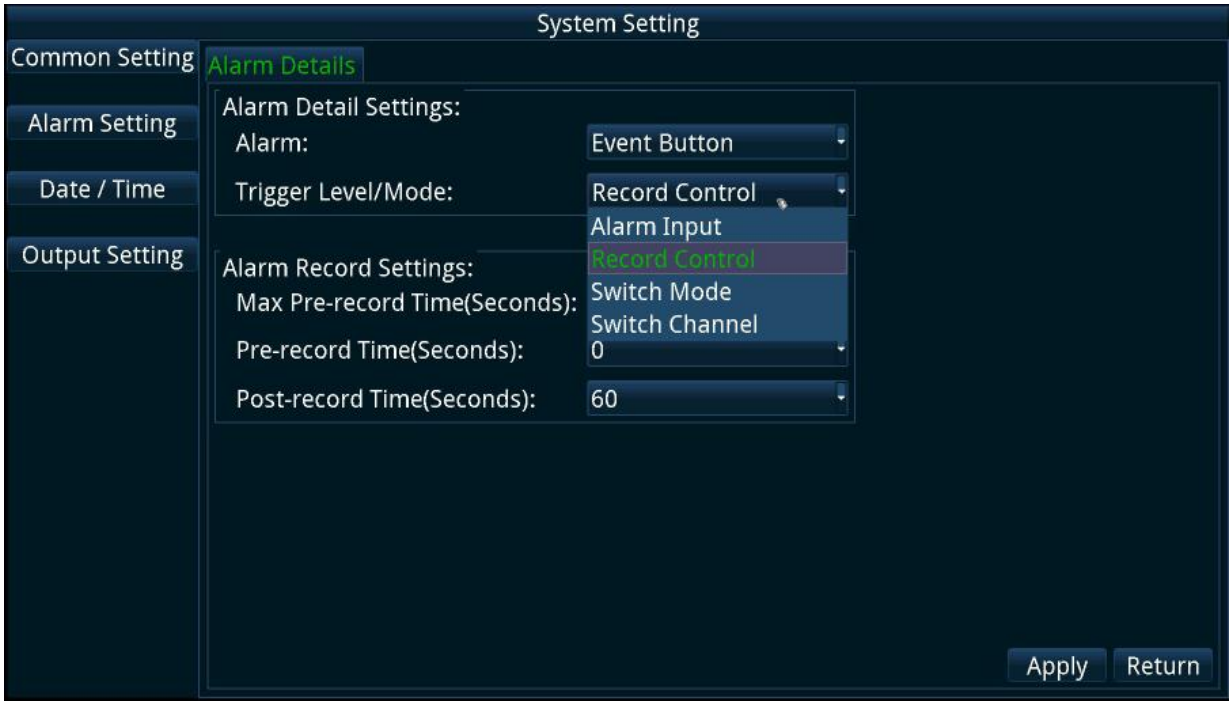

Connect the control panel with DVR, right click to select "main menu", then can choose the "Switch mode" or "Switch Channel" in the alarm setting menu. After the "Switch mode" or "Switch Channel" is set, you can toggle the camera by pressing the button on the control panel.

3.8.3 Audio output

DVR support audio real-time output by HDMI or CVBS display, user can click on the small audio icon to open or close the audio output, the icon means that real-time audio output is ON, the icon for the real-time audio output is OFF. Audio output device is set by "Output Device" setting.

3.9 Format the disk

1. When the disk is used in the DVR for the first time, it should be formatted first.
2. Choose the disk you need to format and click "format" button to format the disk. And user also can set the hard disk or SD card's partition.
3. If no disk is found, the DVR will show "no disk" error message. If there is some error on the disk, such as write error, the error message will also be displayed.
4. When the disk is full, the DVR can be configured to overwrite the earliest file.

Note: The format operation will lose all of the data on the disk. Please backup all of the data on the disk before formatting the disk.

3.10 Setting up the cameras

In the "preview" setting, you can set the cameras parameters and motion detection.

3.10.1 Camera Setting

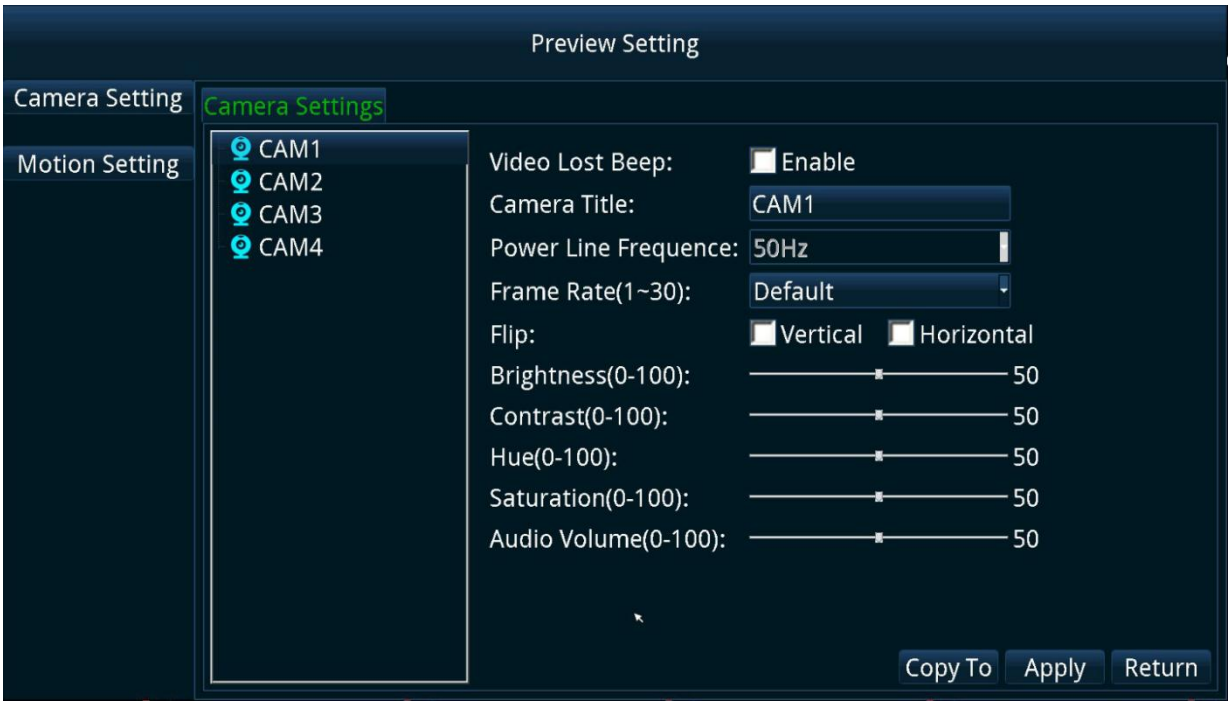

- When the camera is lost, DVR can be configured to beep.
- You can choose to set the parameters of "CAMx", including Camera Title, Frequency，Flip Mode, Brightness, Contrast, Hue, Saturation, Audio Volume, etc.
- The Camera Title should be less than 16 characters.
- The flip mode can be Vertical or Horizontal.。

3.10.2 Motion Detection

Please note: Only the Some camera models support Motion Detection function.

- User can set motion detection area.
- DVR can be set to use Adaptive Bitrate to get better video quality, can be set to start recording when motion detected, can be set to trigger beeper when motion detected.

- User can set the sensitivity of the motion detection. The higher the value is, the more sensitive the DVR will be.

3.11 Record Setting

3.11.1 Setting Record Details

- Each camera can support 1080P/30fps recording, the bitrate range from 100Kbps to 8000Kbps. The default value is 1080P/30fps, 3000Kbps. The recording support adaptive bitrate control to save recording space. The bitrate can be down to only 50% of the setting value if there are no too much motion in the video. For example, if the setting is 720p/25p, 1200Kbps, the actual bitrate can be down to 600Kbps if there are few motion in the video.
- If you are using high bitrate for recording on the SD card, please choose fast speed SD card, Class 10 SD card for example.
- The file length can be from one minute to four hours. Due to the limit on FAT32 file system, each file size cannot be over 2GB. When the file length is too long and bitrate is too high, the file size could be over 2GB. In this case, the DVR will close the file and create a new file automatically to avoid this error.
- There are H264 and H265 video modes can be set. Theoretically, H265 consumes 50% less storage space than H264 under the same picture quality.
- The file size for one hour recording displayed in the menu is for your reference. The actual file size could be little different.
- The record mode support manual/auto/off mode. The default mode is auto. In this mode, the DVR will start record on this camera automatically when the DVR is turned on. If it is set to manual mode, the DVR will not record on this camera until user do it manually. User can use mouse to start record on this camera manually. If this mode is set to off, the DVR will not record on this camera.
- You can click the "start" or "stop" button to start/stop recording on this camera.

- You can click the "apply" button to save the setting.
- The record can be encrypted if you check "using encryption". If the file is encrypted, the record file can't be played by using other player software. You can only use the player software provided by us and need to input the password to play this file.

3.11.2 Record Schedule

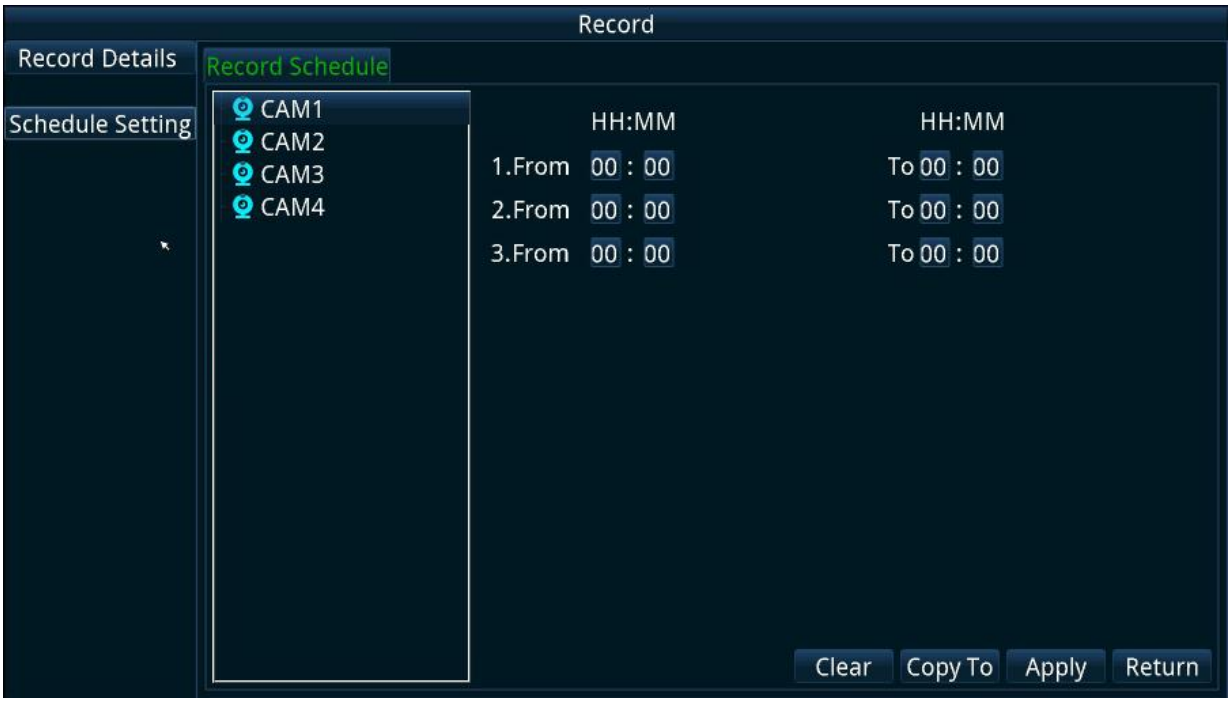

- The record schedule support three different rules for recording.
- All cameras can use the same rule. Each camera can use special rule.

3.12 Power Setting

- ACC Power Off Delay: The DVR can be set to keep on for some time and then turned off automatically after the ignition is turned off. This value is in seconds, the default value is 30 seconds. In this case, the DVR will be going to standby mode and the DVR will be not working. In standby mode, the DVR will not be powered on again unless the ignition is turned on again. And even if the ignition is turned on again, the DVR will still need about one minute to boot up completely to start recording. If the "ACC Power Off Delay" is set to 0, the DVR will be always on and will be turned off immediately when the ignition is turned off.
- Sleep Delay-ACC Off: This parameter is used to set the timeout when DVR is going to sleep mode after the ignition is off. In sleep mode, the cameras will be turned off, but the DVR will be still working. This is different than the case when using the "ACC Power Off Delay" to let DVR go into standby mode. In sleep mode, as the DVR is always working, the DVR can power up the camera and start recording immediately when ACC turns ON. The "Sleep delay-ACC Off" value usually should be set to a value smaller than "ACC Power Off Delay", otherwise the DVR will go into standby mode before going into sleep mode. If "Sleep Delay-ACC Off" is set to zero, the DVR will not go into sleep mode.
- Sleep Delay-No Alarm: This parameter is use to set the timeout when DVR is going to sleep mode after last alarm (event) occurred. If this value is set to zero, the DVR will not going to sleep mode even if there is no alarm for long time.
- Timer Power On/Off: This is used to set the DVR to turn on/off at specified time. If both value is set to "00:00", this feature is disabled.
- Power On/Off Threshold Voltage: When the voltage connected to the DVR is bigger/smaller than the Power On/Off Threshold Voltage, the DVR will turn ON/OFF. When it is set to "0", the setting is OFF.

The reason that we have two power save mode (the standby mode and the sleep mode) for DVR is

that in some case the DVR should resume recording immediately from power save mode. In standby mode, the DVR is turned off and the cameras are also turned off, the power consumption will be very small. But the DVR need about one minute to boot up before it can resume recording. In sleep mode, the DVR is still on but the cameras will be turned off. The sleep mode will have more power consumption than standby mode but will have less power consumption than working mode. A typical use for sleep mode and standby mode is for taxi application. The DVR can set "ACC Power Off Delay" to 21600 seconds (6 hours), set "Sleep Delay-ACC off" to 10800 seconds(3 hours), set "Sleep Delay-No Alarm" to 10800 seconds(3 hours). We will also connect the taxi meter signal to the "Sensor 1" (Alarm 1) and the door open signal to "Sensor 2" (Alarm 2) and these two sensors will trigger recording. With this configuration, if the taxi is parking (no ignition) for 3 hours and there is no passenger (no meter on or no door open) for 6 hours, the DVR will be in sleep mode. But during this time, if the taxi is turned on or there is any passenger, the DVR will start recording immediately. If the taxi is parking (no ignition) for 6 hours and there is no passenger (no meter on or no door open) for 6 hours, we will think the taxi is not running, the DVR will be in standby mode.

3.13 Motor Setting

- License ID: Set the plate number, support characters (case sensitive) and numbers.
- Support to get speed from speed, the speed unit can be km/h or mile/h;
- Can set the overspeed value. The over speed alarm can be used to trigger recording. If the over speed value is set to zero, the over speed alarm will be disabled.
- "Overspeed OSD" is used to set the tile displayed when over speed.
- "Overspeed Buzzer" is used to turn on/off buzzer when over speed.

3.14 GPS Setting

- GPS Status：
  GPS Not Found: No GPS found on the DVR.
  GPS GPRMC: DVR got "GPRMC" data from GPS, but GPS signal is not good.
  GPS OK: GPS working correctly.
- GPS OSD: If this option is turned on, the GPS data (latitude and longitude) will be displayed and record with video.
- GPS OSD: If this option is turned on, the GPS data (latitude and longitude) will be displayed and record with video.
- Sync with GPS Time: When this option is turned on, the DVR will synchronize with GPS time.
- GPS Baud rate: The communication bard rate between GPS and DVR. The default value is 9600.

3.15 G-Sensor

- Instant Value: It shows the current value from G-Sensor in axis X, Y and Z. Due to the gravity, if the DVR is put horizontally, the initial value of axis Z will have about 1.0G and the value will be about -1024.
- Initial Offset: The "Initial Offset" is used to have a base value for alarm threshold. As DVR will be installed in different place, the "Initial Offset" can be set to the initial value displayed in "Instant Value". In this way, if there is any change between current G-Sensor data and the initial Offset, we will think there might be something happened.
- Alarm Threshold: The "Alarm Threshold" is used to set the threshold to trigger alarm. If the difference between "Instant Value" and "Initial Offset" is larger than "Alarm Threshold", the DVR will trigger a G-Sensor alarm.
- Alarm OSD: Set the title displayed and recorded in the screen when there is a G-Sensor alarm.

- Alarm Record: Set up the G-Sensor alarm recording.

3.16 3G/4G Setting

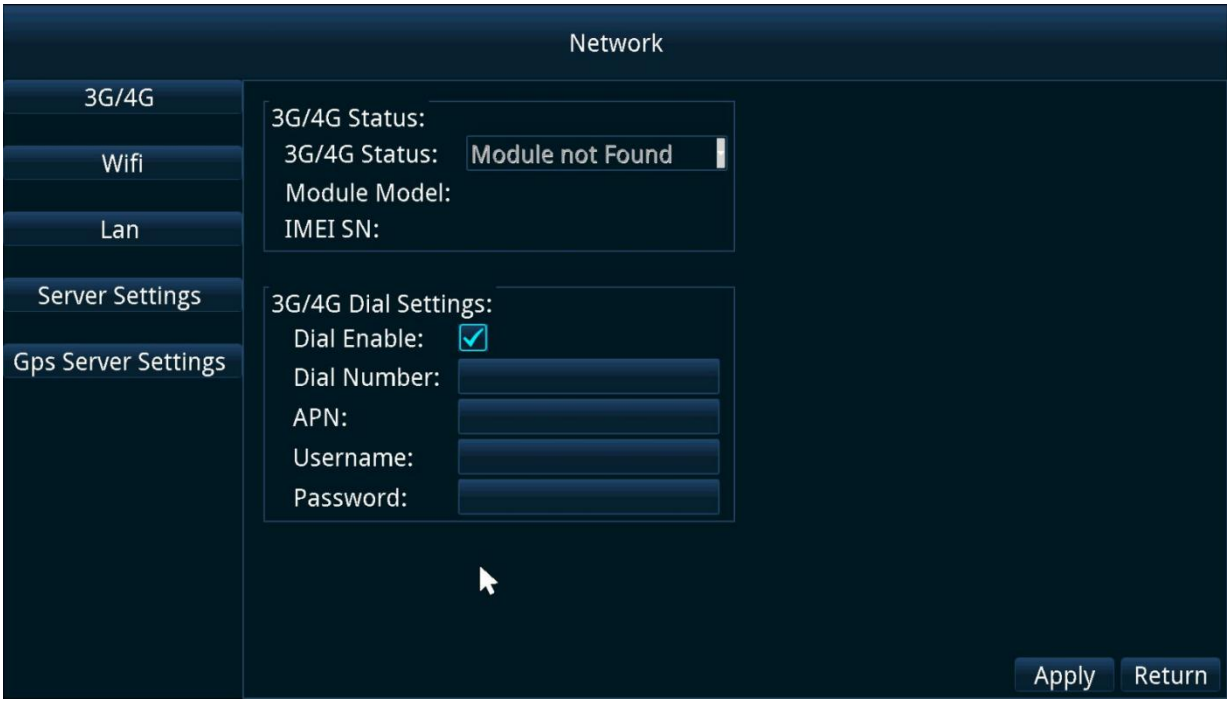

- 3G/4G Status：
  Module Not found: The DVR did not found the build-in 4G/3G module.
  Module Loaded: The DVR found built-in module, but can't connect to mobile network. It could be without SIM card or 4G/3G signal is not good.
  Mobile Connected: 4G/3G is working correctly.
- 3G/4G Dial Settings: User should set these parameters according to the parameters provided by

the mobile service provider.

- DVR can connect to an APN network, user need to enter APN parameters to access the APN network.
- The SIM card can't be hot swappable. If you change the SIM card, you should restart the DVR to make it take effect.

3.17 WIFI Setting

- WIFI Status:
  Connected: DVR connect to a WIFI and access to internet successfully.
  Module Not Fund: DVR has not found built in WIFI module.
  Module Loaded: DVR has detected WIFI module but not found any WIFI signal.
  Disconnected: No any WIFI connection.
  Not Connect Internet: DVR has connected a WIFI but can NOT access to internet.
- The WIFI connected before can be saved in WIFI list, DVR can save up to 50 WIFI SSID, and those WIFI saved in DVR can be deleted.
- DVR support Access Point, the default password is 12345678.

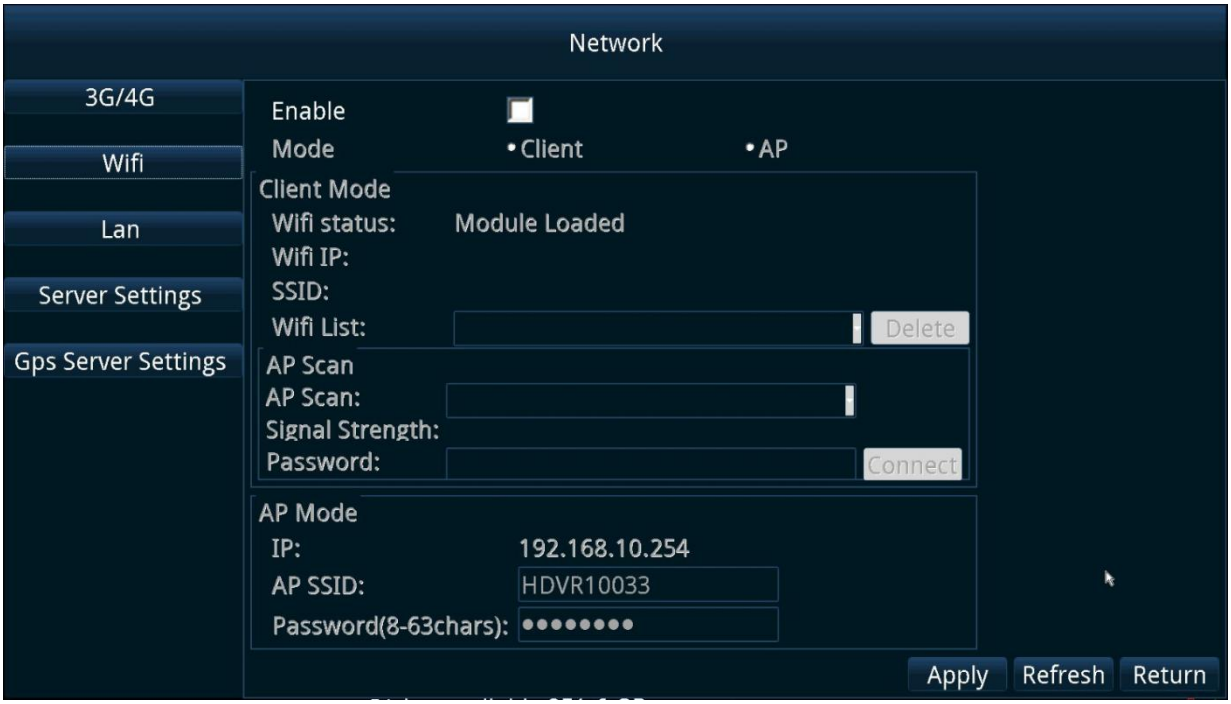

3.18 Network Setting

- DVR support dynamic IP and static IP, the default IP is 192.168.0.220.
- The network setting should comply with the network setting where DVR is located.

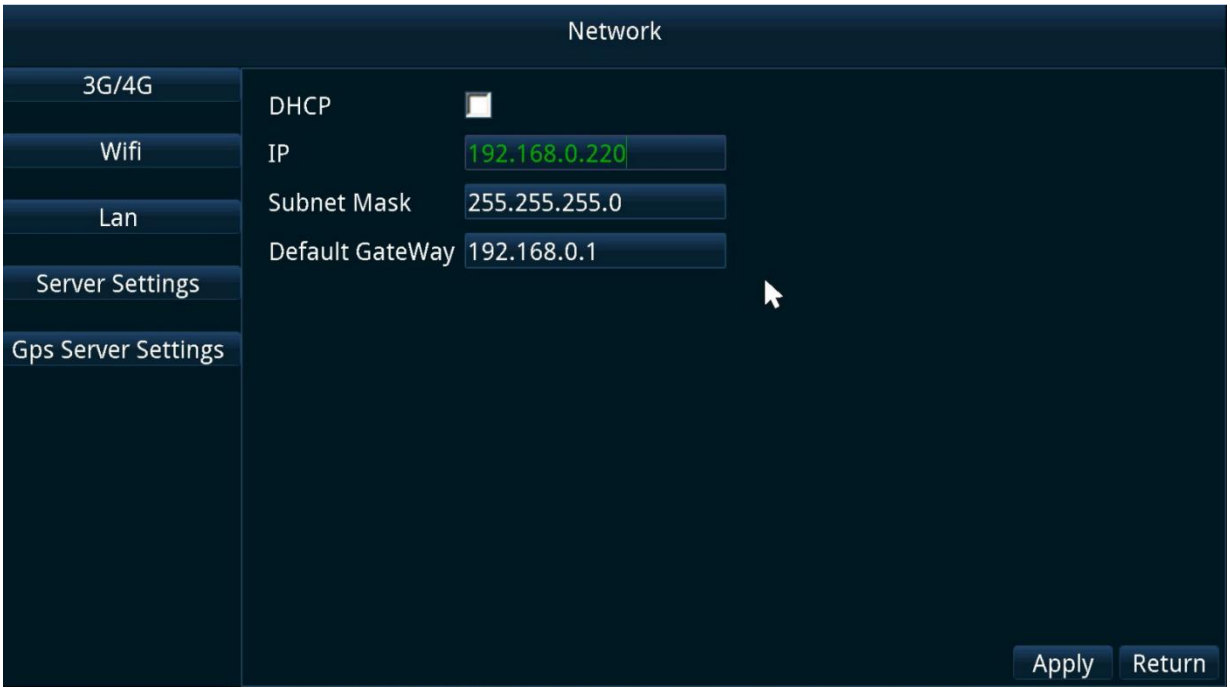

3.19 Server Settings & GPS Server Settings

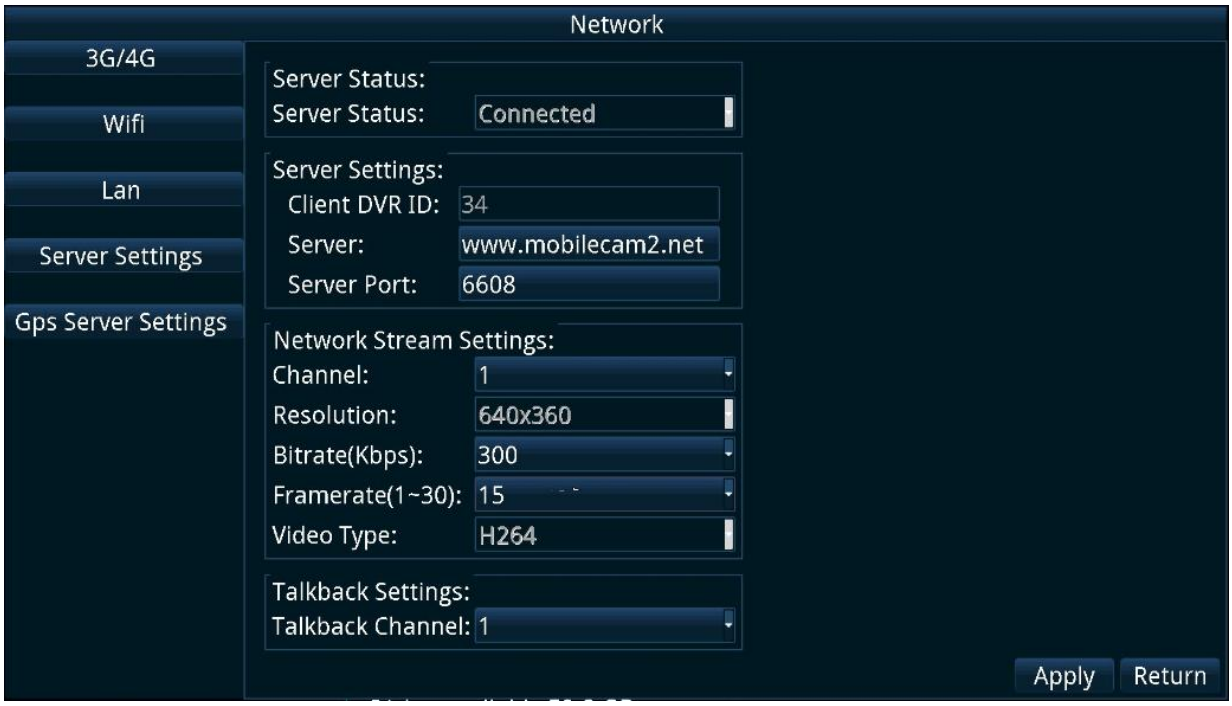

- Server Status:
  "Connected" means DVR is connected with server correctly. "Disconnected" means DVR is not connected with server.
- DVR ID is the ID for server, user can't change this value.
- Server IP is the IP of the server, usually no need to change.
- The video type can be set to H264 or H265 (according to the camera model). Theoretically, under the same picture quality, H265 costs 50% bandwidth comparing with H264.

- Server port is the port for communication. The default port number is 6608. Usually no need to change this value.
- Network Stream Setting: these are parameters for live streaming via 4G/3G. The default resolution is 640x360, bitrate is from 10Kbps and 1500Kbps. Frame rate is from 1fps to 30fps.
- DVR can connect intercom to communicate with platform.
- GPS Server settings that can be use for sending GPS data to USER server.

3.20 System Setting

- Enable the "Tooltip Bar Show" or "DVR Time Display", the bottom of preview interface can show the storage, network information and DVR's date and time.
- DVR support multiple language.
- Can set the number of digital cameras and analog cameras.

3.21 Alarm Setting

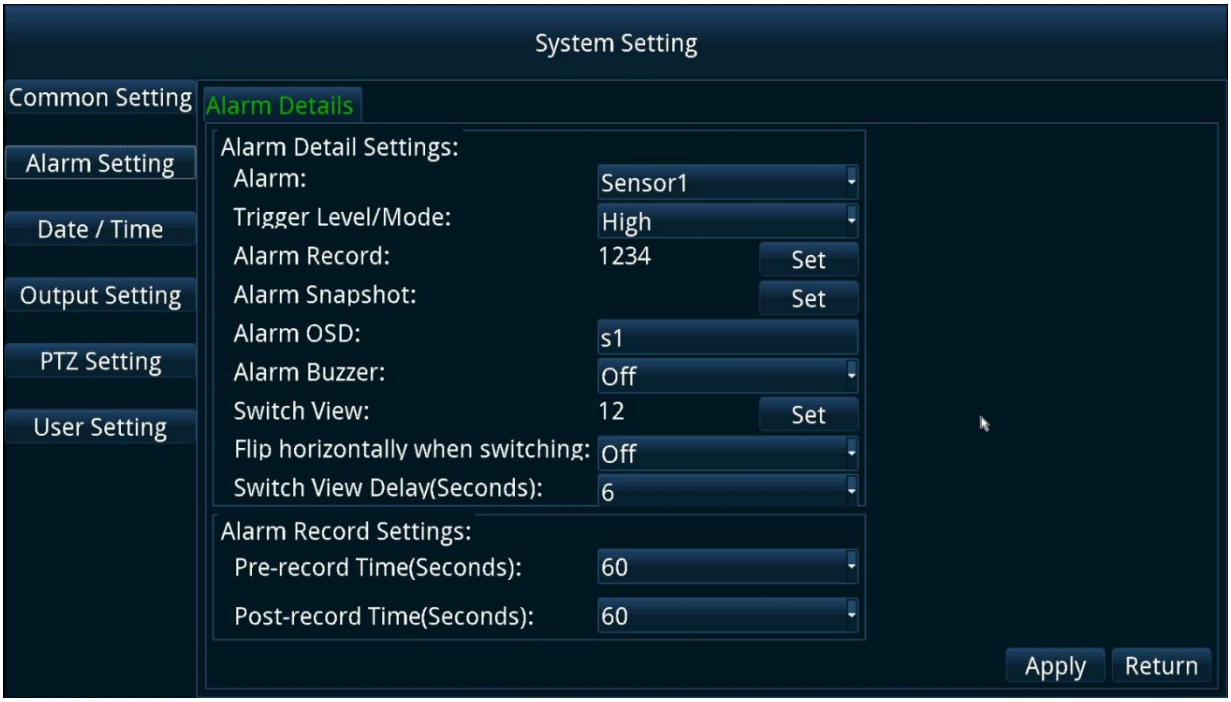

- DVR have 3 alarm sensors. In alarm setting you can setup these 3 sensors.
- Trigger Level: If the trigger level is set to high, a high level voltage on the sensor will trigger an alarm. You can check the "Trouble Shooting" at the end of this manual for the definition on the high level and low level.
- User can set up the alarm recording for these events.
- Alarm OSD: the title user wants to display on the screen and be recorded with video.
- Alarm Buzzer: Enable/Disable buzzer when there is alarm.
- Switch View: Choose one camera to be in full screen mode when there is alarm. This can be used for rear view full screen or side view full screen. For example, user can connect sensor 1 to return signal, and if camera 1 is the rear view camera, we can set the "switch view" for sensor 1 to 1. In this way, when the vehicle is returning, camera 1 will be displayed as full screen on the monitor.
- Switch View Delay: The DVR will keep switching the camera until the alarm is not triggered for specified delay time. This is useful for side view camera. For example, if the left side camera is camera 2, and user connect sensor 2 to the left light signal on the vehicle. When the driver is switching to left light, the sensor 2 alarm will be triggered. But usually the left light will not be always on, it will be blinking like on, off, on, off... So the sensor 2 alarm will also be on, off, on, off... In this case, we can set "Switch View Delay" for 5 seconds, e.g., for sensor 2 and set "Switch view" for sensor 2 to camera2, then the DVR will keep camera 2 in full screen mode, until the sensor 2 alarm is off for over 5 seconds.
- Pre-Record Time: The time DVR will keep for recording before the alarm is triggered.
- Post-Record Time: The time DVR will keep for recording after the alarm is triggered.
- All of the alarm record files will be kept in a separate alarm folder, the files in the folder will not be overwritten.

3.22 Set Date and Time

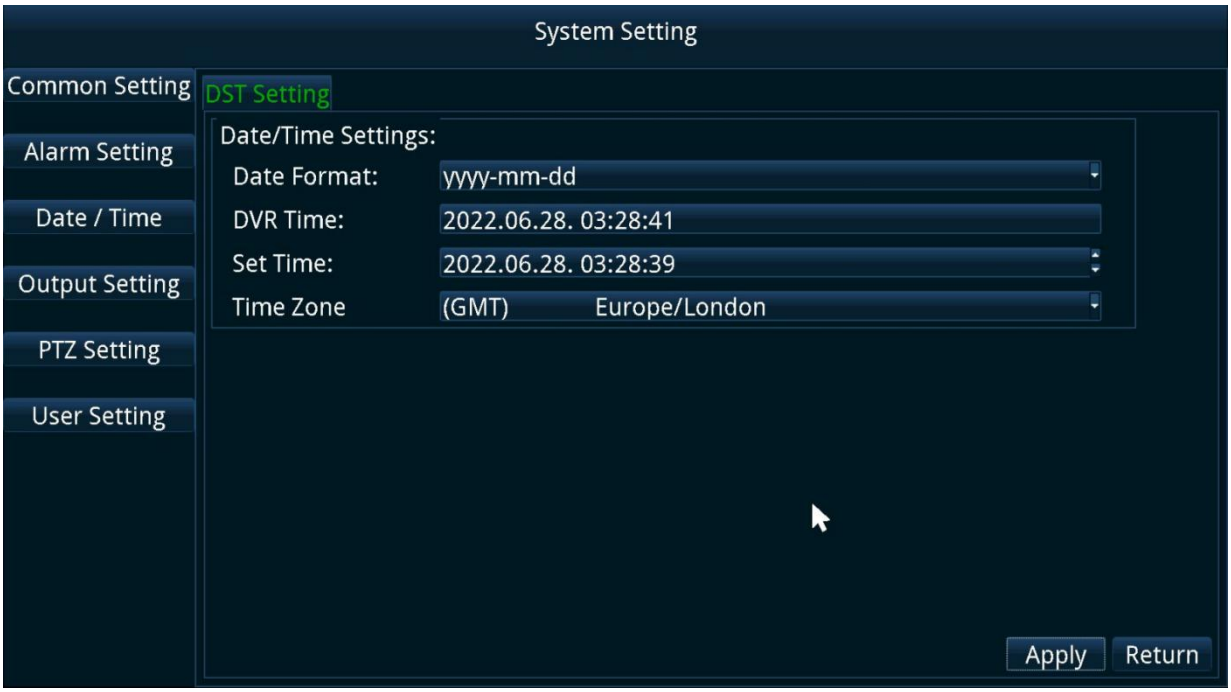

- User can choose different date format.
- DVR time is only used for displaying current time. It's not editable here.
- You can set the DVR time in "Set Time". If you find the DVR time is not changed as you specified, please check to see if you have enabled the "Sync With GPS Time".
- User can set up different time zone and DST would be take effect if the city was in DST period.

3.23 Output Setting & PTZ Setting

- DVR can connect HDMI and CVBS monitor at the same time, and the audio output is based on the setting of the "output device".
- DVR supports the volume adjustment for CVBS monitor and the time for DVR to enter Screen Saver mode can be set. When it is set to "0", DVR wound NOT enter Screen Saver mode.
- CVBS Output Reduction Value means that the user can adjust the output display pixel according to the current CVBS screen.
- Recover Config Mode Delay means that DVR would show all cameras' view when DVR boots to check camera status then show back to the setting view on the screen.

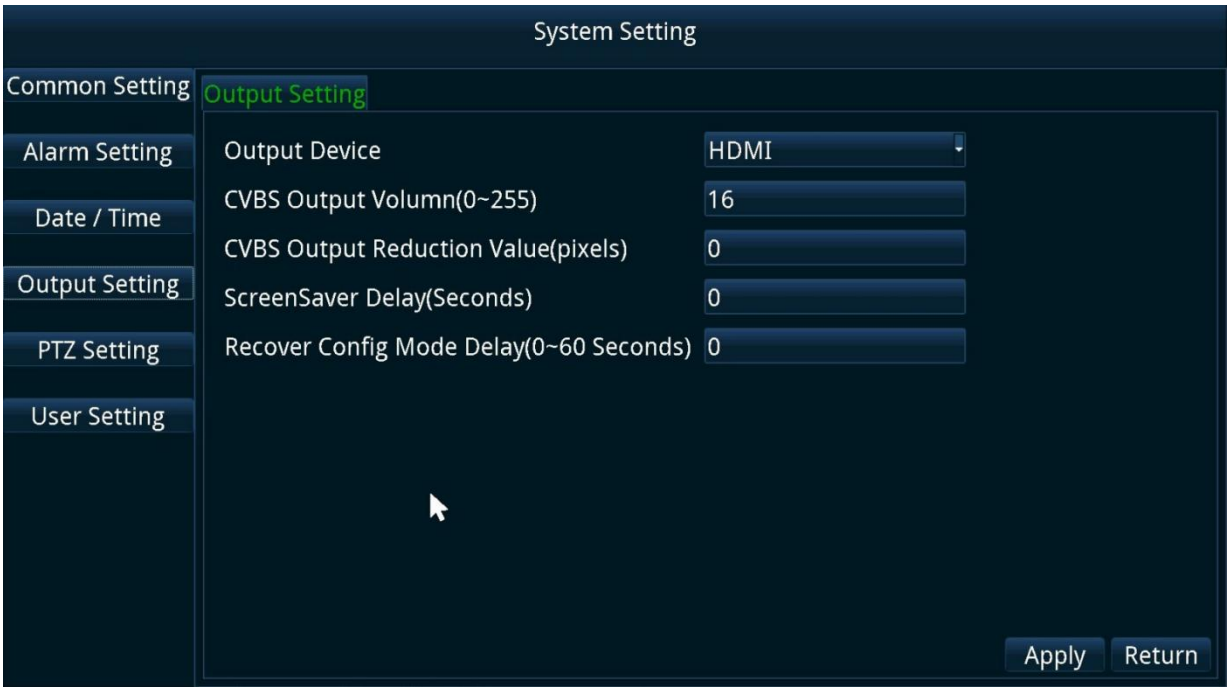

3.24 Record Play back

- User can play back the files on hard disk or SD. If user need to play files on hard disk, please choose "sata".
- The record files are listed according time and cameras.
- When playing back, user can fast forward, slow forward, pauses, step for playing.

3.25 System Information

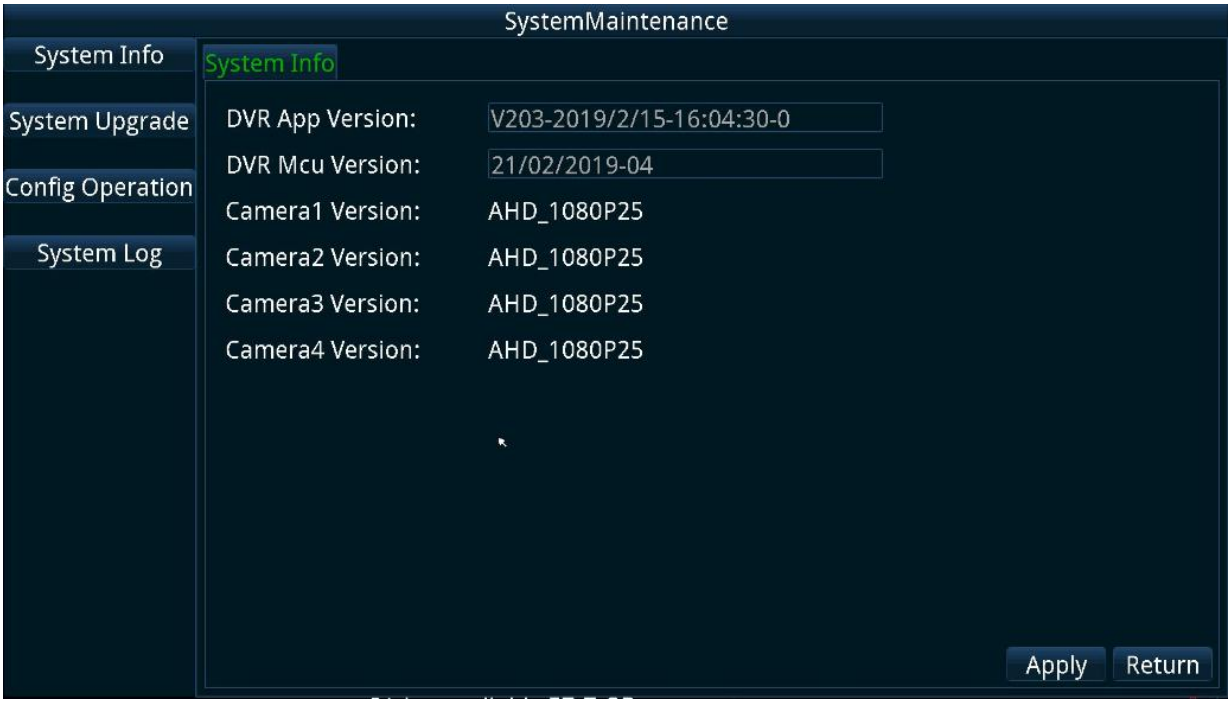

- In system information, it will display the firmware version, MCU firmware version, camera style.

3.26 System Upgrade and Log

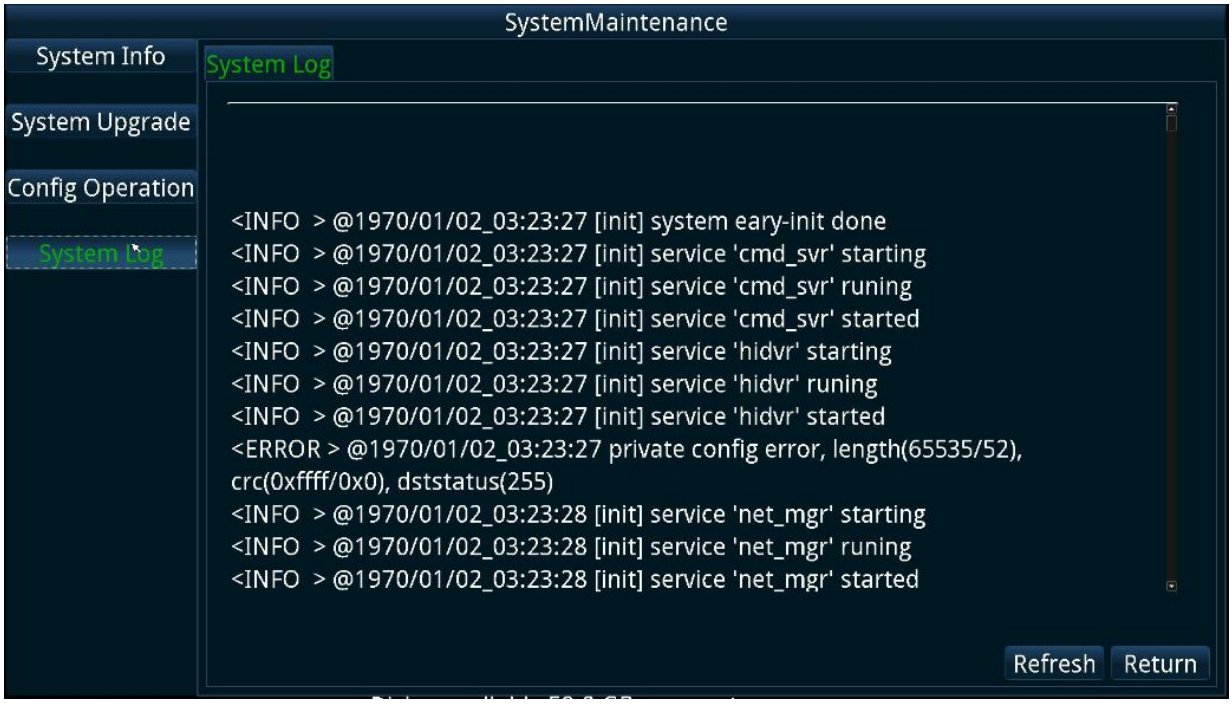

- The firmware upgrade file is a file with "tar" as file extension. Other files can't be used for upgrade.
- When upgrade is finished, DVR need to be restarted before new firmware take effect.

- DVR can reset to default setting. Please note, all setting will be lost if DVR is reset to default setting. The DVR will need to be restarted to make the default setting take effect.
- The DVR setting can be exported to a file. This file can be used to import to other DVR to have the same setting. Importing setting of DVR will need to restart the DVR to take effect.
- For DVR support 4G/3G, user can import the setting to DVR via 4G/3G.
- User can connect a SD card or hard drive to get the DVR's log.

4. WEB setting page

- User can get into the web setting page after input DVR's IP in browser (your PC and DVR should be in a LAN by net-cable/ WIFI/ AP)
- Users can set parameters and view the live streaming in WEB page.
- User can upgrade the FW in WEB page.

5. Specification

SYSTEM	OS	Linux 4.9.138
	Booting Time	<20 s (From Powered on to start recording)
	Language	Chinese/English/Russian
	UI	GUI
Video	Video Input	1080p Analog/AHD cameras or digital cameras input
	Video Output	2 Video Output (1 HDMI output---optional, 1 CVBS output)
	Preview	Support FullScreen/Dual View/Quad View/6 View/8 View/10 View
	Record Mode	Auto Record, Schedule Record, Alarm Record
	Record File	Record video and audio at same time
	Compression	H.264
Audio	Audio Input	audio is built in the camera
	Audio Compression	PCM
Video Process	Record Resolution	Support 1920x1080/1280x720/960x540(According to the type of camera)
	Bitrate	100～8000 kbps for each camera
	Storage	Support up to 6TB hard disk，one up to 256G SD card. SD card can be used as backup storage for hard disk when hard disk error, the video file format is AVI
Alarm	Alarm Input	3 alarm sensors input, 1 ignition input, 1 panic button alarm, 1 G-Sensor alarm
	Alarm Output	1 beeper, Alarm OSD
	Event	Video Loss Event, Over Speed Event, G-Sensor Event, Storage Event, Motion Detection Event, Panic button Event
Communication	RS485	One RS485 port
	RS232	One RS232 port (For GPS)
	RJ45	One RJ45 port, 100M network
	USB	One USB port, can be used for mouse, USB stick
Network	Protocol	TCP / IP
	3G/4G	Optional, build in 3G/4G(HSUPA/HSDPA/WCDMA/EVDO/TD-SCDMA/FDD-LTE/TDD-LTE)
	WIFI	Optional, support WIFI connection and AP
Location	Location	Location feature is optional, Support GPS/GLONASS/BEIDOU，recording location, speed, live tracking
Firmware	Frame Rate	Recording frame rate: 1～30fps selectable for each camera
	License ID	Support
	Camera Name	Support
	OSD	Display and record time, license ID, camera name, location, speed
	Firmware	Can use hard disk/USB disk/SD card/remote upgrade via 4G

	Upgrade	
	G-Sensor	Support
	Play back	Support play back, file listed by time, alarm
	Play Speed	Support from 1/32 to 32
Software	hPlayer	Player software, play multiple cameras together, can also play the encrypted file
	CMSV6	Used for 4G/3G model only, support live view/live tracking/historical track/remote upgrade
Power Input	Power Input	12VDC～32VDC
Power Output	Power Output	Power output for cameras: 12V/1.5A
ACC	<4.5V	Ignition Off
	>6.2V	Ignition ON
Power Control	Ignition	Turn on the DVR when ignition is on, can set DVR to turn off after a specified time when ignition is off
	Power Consumption	Less 5.0W (No camera power consumption included)
Other	Size	162.3x133.0x30.2 mm
	Weight	About 0.55kgs
	Time	Internal clock, can synchronize with GPS
	Dual bit stream	Two different bit stream for recording and live streaming via 4G/3G
	Power Protection	Protect power from short cut, over load and error connection
	Default	Can set to default setting
	Light Indicator	Light Indicator for power, run, alarm network, 4G/3G
	Over Write	Support
	Time Synchronize	Synchronize with GPS
Working Condition	Working Temperature	-25 ～ 55°C
	Working Humidity	5%～93%

6. Trouble Shooting

1. Q : After connecting the DVR power, no videooutput, the first and second indicators lights on panel flashing alternately.

A: The No.1 and No.2 indicator light is “Power” and “Run”. If the 2 indicators lights are flashing alternatively, the DVR missed the ignitionsignal, please check if the yellow line of the input power lines has connected with the power positivelevel, or if it’s the same as the setting of the effective electrical level in menusettings. (The factorydefault settings set the highleveleffective,that is, it is effective when the yellowignitionsignal line is connecting with the power positivelevel .)

2. Q: As HDD’s capacity limited, how to make the videos’ time expand to meet the requirements of the customers?

A: Use Advance type to record, reduce the video frame rate, video resolution.

3. Q: when using the SD card, ScreenTip appears "read only error ".

A: Please check if the SD card is write-protected, if so, please move the picks to the non - write protected.

4. Q: What is a high level, what is low level?

A: Generally, there are two electrical levels in the car, the power and the ground. Automotive power voltage with 12V and 24V, we generally call it high level, not the specific voltage value. Ground of Vehicle is the reference level, accurately is battery negative electrode. We generally call it low level. For cars with negative switch control (the main switch cut off the connection of the battery cathode and car chassis ground), the chassis ground connects to the battery anode through a certain resistance, the chassis ground is not a reference ground anymore. Please see the Appendix in the back, including the potential analysis diagram against cars with negative switch control.

5. Q: Respectively, what’s the voltage reference range of the high and low level in the DVR?

A: The voltage range of low level is DC 0V~1.5V, the high level is DC2.8V~32V.

6. Q: How to control the DVR？

A: Please insert a USB mouse to call the menu settings, use left or right button on the USB mouse to select, input and confirm what you want to set.

7. Q: SD cards or hard disc are OK, but the video recording doesn't work, what should I do?

A: Please make sure if the default setting of Record Mode is changed from "Automatic" to" Off ", and whether to modify the DVR to scheduled record mode and the current time is not within the time period you set.

8. Q: Do your Mobile HDD DVR support the capacity of 64G and above SDXC

card?

A: Yes, The HDD DVR support the capacities of 64G and above SDXC cards.

9. Q: when the disk is inserted the DVR for recording, live images or playback visual will come to a frequent halt.

A: Please make sure the SD card's writing speed is sufficient. Class 10 SD Card is recommended.

10. Q: Do internal real time clock of the DVR maintained by batteries? If so, how long will it last?

A: Rechargeable batteries are used for DVR internal real time clock. If the battery is fully charged and DVR is completely disconnected from the power supply, internal real time clock can probably last for 1 month.

11. Q: what do the 6 indicator lights representative on the panel of the DVR?

A: Please check 2.1 front panel in this manual for the use of these light indicator.

12. Q: what kind of player software should use to play back video slots in HDD on the PC? Why some of them don't play normally?

A: The Mobile DVR recording files is a standard AVI format, video stream compression standard is senior H. 264.

1. We have our own playback software named hPlayer. It's with some additional functions, such as playing continuously, GPS map, fast forward, quick file search, etc.
2. If a file is not encrypted, it can also be played back on third party player, such as VLC (version 1.0.0 or above. It's free open source software, and can be downloaded from the internet), Media Player Classic (version 2009 Build: 3.9. or above).
3. For a file is encrypted, it would have to be played on hPlayer provided by us.

13. Q: How to upgrade the Mobile DVR program?

A: 1.Copy the update package (Suffix ".tar" files) to the root directory of HDD (or SD CARD, USB disk). Be careful not to extract.

2. Insert the disk to DVR, after the machine detects the HDD, use the menu system in the DVR to choose "system upgrade" to upgrade the firmware.

14. Q: Does your DVR have RS485 control PTZ functions?

A: For very few of car application using PTZ control, mobile DVR factory default is without the RS485 control PTZ functions. If you do need PTZ control function, please contact sales when ordering.

15. Q: I bought the mobile DVR with PTZ control function, but it has no response after PTZ connecting.

A: After you have confirmed your machine already has PTZ control function, you may test your control functions in accordance with the following:

1, Exchange the two lines of 485A and 485B, to see if they are connected wrong;

2, Confirm if the PTZ Protocol is right;

3, Confirm if the PTZ Address is right, our default is 1, trying to adjust to 0 or 2; generally the PTZ address code is 1. The address code needs to be changed when multiple PTZ devices connected. In addition, the address of each PTZ device cannot be duplicated, if you have 4 PTZ devices, you can respectively set them to address 1, address 2, addresse3 and address 4.

16. Q: How long will my HDD of 250GB record?

A: when you are setting record details in the DVR, you can see the estimated disk usage for each camera, you can calculate the time for recording according to these data.

17. Q: what is "Power OFF Delay"?

A: In some cases, the users may need the DVR to continue the recording for a specific time after the driver turns off the engine. This is called "Power OFF Delay". The time can be configurable.

To use "Power OFF Delay", the positive level of DVR and the ground should be connected directly (through the fuse) to the cathode and anode of the vehicle battery. Meanwhile, connect the ignition signal wire to the ACC.

Note: Time of "Power OFF Delay" should not be set for a long time, as the engine is off, the DVR may drain out the vehicle battery and the vehicle may not be able to start.

17. Q: Click the screen audio icon to open the audio real-time output, but the monitor no sound output.

A: Make sure that the monitor supports audio output. If the support screen supports audio output, check whether the type of monitor matches the settings. (Should correspond to the settings under "System Setting" ➔ "Common Settings" ➔"Output Device")

7. Packing List

Standard Packing List：

Item	Description	Quantity
1	DVR	1 set
2	DVR enclosure	1 set
3	DVR enclosure key	2 sets
4	Hard disk key	2 sets
5	AV input cable	2 pcs or 4 pcs(depends on DVR model), can choose BNC connectors or 4-pin connectors
6	Power cable	1 pc
7	AV output cable	1 set
8	Fuse holder	1 set
9	5A fuse	2 sets
10	Composite cable	1 set
11	Manual	1 set
12	3G/4G antenna	1 set (only applicable for 4G/3G model)
13	WIFI antenna	1 set （only applicable for WIFI model）
14	Screws	6 pcs

Optional accessories(need to buy separately)：

Item	Description
1	GPS receiver
2	Control Panel
4	Hard disk reader
5	Camera extension cable (3 meter, 6.2 meter, 10 meter)
6	Hard Disk