FCC Measurement/Technical Report on

WLAN transceiver
Porsche Wall Charger Connect
PWCCU192A

FCC ID: 2AT4E-ICCPDG2HIGH
IC: 25258-ICCPDG2HIGH

Test Report Reference: MDE_ESYST_2001_FCC_01

Test Laboratory:
7layers GmbH
Borsigstrasse 11
40880 Ratingen
Germany

DAkkS
Deutsche
Akkreditierungsstelle
D-PL-12140-01-01
D-PL-12140-01-02
D-PL-12140-01-03

Note:
The following test results relate only to the devices specified in this document. This report shall not be reproduced in parts without the written approval of the test laboratory.

Table of Contents

1 Applied Standards and Test Summary 3

1.1 Applied Standards 3

1.2 FCC-IC Correlation Table 4

1.3 Measurement Summary 5

2 Revision History / Signatures 6

3 Administrative Data 7

3.1 Testing Laboratory 7

3.2 Project Data 7

3.3 Applicant Data 7

3.4 Manufacturer Data 7

4 Test object Data 8

4.1 General EUT Description 8

4.2 EUT Main components 8

4.3 Ancillary Equipment 9

4.4 Auxiliary Equipment 9

4.5 EUT Setups 9

4.6 Test Channels 9

4.7 Product labelling 9

5 Test Results 10

5.1 Conducted Emissions at AC Mains 10

5.2 Transmitter Spurious Radiated Emissions 13

5.3 Band Edge Compliance Radiated 22

6 Test Equipment 29

7 Antenna Factors, Cable Loss and Sample Calculations 32

7.1 LISN R&S ESH3-Z5 (150 kHz – 30 MHz) 32

7.2 Antenna R&S HFH2-Z2 (9 kHz – 30 MHz) 33

7.3 Antenna R&S HL562 (30 MHz – 1 GHz) 34

7.4 Antenna R&S HF907 (1 GHz – 18 GHz) 35

7.5 Antenna EMCO 3160-09 (18 GHz – 26.5 GHz) 36

7.6 Antenna EMCO 3160-10 (26.5 GHz – 40 GHz) 37

8 Photo Report 37

9 Measurement Uncertainties 38

1 APPLIED STANDARDS AND TEST SUMMARY

1.1 APPLIED STANDARDS

Type of Authorization
Certification for an Intentional Radiator.

Applicable FCC Rules

Prepared in accordance with the requirements of FCC Rules and Regulations as listed in 47 CFR Ch.1 Parts 2 and 15 (10-1-19 Edition). The following subparts are applicable to the results in this test report.

Part 2, Subpart J - Equipment Authorization Procedures, Certification

Part 15, Subpart C – Intentional Radiators

§ 15.201 Equipment authorization requirement

§ 15.207 Conducted limits

§ 15.209 Radiated emission limits; general requirements

§ 15.247 Operation within the bands 902-928 MHz, 2400-2483.5 MHz

Note:
The tests were selected and performed with reference to the FCC Public Notice “Guidance for Compliance Measurements on Digital Transmission System, Frequency Hopping Spread Spectrum System, and Hybrid System Devices Operating under Section 15.247 of the FCC Rules, 558074 D01 15.247 Meas Guidance v05r02, 2019-04-02”. ANSI C63.10–2013 is applied.

1.2 FCC-IC CORRELATION TABLE

Correlation of measurement requirements for DTS (e.g. WLAN 2.4 GHz) equipment from FCC and IC

DTS equipment

Measurement	FCC reference	IC reference
Conducted emissions on AC Mains	§ 15.207	RSS-Gen Issue 5: 8.8
Occupied bandwidth	§ 15.247 (a) (2)	RSS-247 Issue 2: 5.2 (a)
Peak conducted output power	§ 15.247 (b) (3), (4)	RSS-247 Issue 2: 5.4 (d)
Transmitter spurious RF conducted emissions	§ 15.247 (d)	RSS-Gen Issue 5: 6.13 / 8.9/8.10; RSS-247 Issue 2: 5.5
Transmitter spurious radiated emissions	§ 15.247 (d); § 15.209 (a)	RSS-Gen Issue 5: 6.13 / 8.9/8.10; RSS-247 Issue 2: 5.5
Band edge compliance	§ 15.247 (d)	RSS-247 Issue 2: 5.5
Power density	§ 15.247 (e)	RSS-247 Issue 2: 5.2 (b)
Antenna requirement	§ 15.203 / 15.204	RSS-Gen Issue 5: 8.3
Receiver spurious emissions	–	–

1.3 MEASUREMENT SUMMARY

47 CFR CHAPTER I FCC PART 15 Subpart C §15.247	**§ 15.207**			
Conducted Emissions at AC Mains				
The measurement was performed according to ANSI C63.10			**Final Result**	
OP-Mode	**Setup**	**Date**	**FCC**	**IC**
Operating mode, Connection to AC mains				
worst case, direct	S01_AA01	2020-12-09	Passed	Passed

47 CFR CHAPTER I FCC PART 15 Subpart C §15.247	**§ 15.247 (d)**			
Transmitter Spurious Radiated Emissions				
The measurement was performed according to ANSI C63.10			**Final Result**	
OP-Mode	**Setup**	**Date**	**FCC**	**IC**
Radio Technology, Operating Frequency, Measurement range				
WLAN b, high, 1 GHz - 26 GHz	S01_AA01	2020-12-08	Passed	Passed
WLAN b, high, 30 MHz - 1 GHz	S01_AB01	2020-12-09	Passed	Passed
WLAN b, low, 1 GHz - 26 GHz	S01_AA01	2020-12-08	Passed	Passed
WLAN b, low, 30 MHz - 1 GHz	S01_AB01	2020-12-09	Passed	Passed
WLAN b, mid, 1 GHz - 26 GHz	S01_AA01	2020-12-08	Passed	Passed
WLAN b, mid, 30 MHz - 1 GHz	S01_AB01	2020-12-09	Passed	Passed
WLAN b, mid, 9 kHz - 30 MHz	S01_AB01	2020-12-09	Passed	Passed
WLAN g, high, 1 GHz - 26 GHz	S01_AB01	2020-12-09	Passed	Passed
WLAN g, low, 1 GHz - 26 GHz	S01_AA01	2020-12-08	Passed	Passed
WLAN g, mid, 1 GHz - 26 GHz	S01_AA01	2020-12-08	Passed	Passed

47 CFR CHAPTER I FCC PART 15 Subpart C §15.247	**§ 15.247 (d)**			
Band Edge Compliance Radiated				
The measurement was performed according to ANSI C63.10			**Final Result**	
OP-Mode	**Setup**	**Date**	**FCC**	**IC**
Radio Technology, Operating Frequency, Band Edge				
WLAN b, high, high	S01_AA01	2020-12-08	Passed	Passed
WLAN g, high, high	S01_AB01	2020-12-09	Passed	Passed
WLAN n 20 MHz, high, high	S01_AB01	2020-12-09	Passed	Passed
WLAN n 40 MHz, high, high	S01_AB01	2020-12-09	Passed	Passed

2 REVISION HISTORY / SIGNATURES

Report version control			
Version	**Release date**	**Change Description**	**Version validity**
initial	2021-02-05	--	valid
--	--	--	--

COMMENTS:

The EUT is a variant of the previously tested device. According to the information provided by the applicant, the housing is changed and electrical parts not belonging to the radio PCB are changed. The PCB of the WLAN radio is identical, the previous listings at FCC / ISED can and shall be carried forward in same IDs.
Therefore, radiated spurious emissions have been tested for the combinations and measurement ranges listed in sub-clause 1.3.
The nominal RF power is reduced compared to the initial tests, for details please refer to sub-clause 4.1.
Reference to the test report of the previously tested device:
MDE_BEBRO_1501_FCCb_rev02

The device can be connected to 1- or 2-phases AC Mains (120 V~ to ground), providing 40 or 80 A accordingly. For the tests, the radio is operated from 120 V 1-phase AC Mains. Circuits related to the charging function are inactive.

(responsible for accreditation scope)
Dipl.-Ing. Daniel Gall

(responsible for testing and report)
Dipl.-Ing. Andreas Petz

7 layers GmbH, Borsigstr. 11
40880 Ratingen, Germany
Phone +49 (0)2102 749 0

3 ADMINISTRATIVE DATA

3.1 TESTING LABORATORY

Company Name:	7layers GmbH
Address:	Borsigstr. 11 40880 Ratingen Germany

The test facility is accredited by the following accreditation organisation:

Laboratory accreditation no:	DAkkS D-PL-12140-01-01| -02 | -03
FCC Designation Number:	DE0015
FCC Test Firm Registration:	929146
ISED CAB Identifier	DE0007; ISED#: 3699A
Responsible for accreditation scope:	Dipl.-Ing. Daniel Gall
Report Template Version:	2021-01-13

3.2 PROJECT DATA

Responsible for testing and report:	Dipl.-Ing. Andreas Petz
Employees who performed the tests:	documented internally at 7Layers
Date of Report:	2021-02-05
Testing Period:	2020-12-08 to 2020-12-09

3.3 APPLICANT DATA

Company Name:	eSystems MTG GmbH
Address:	Bahnhofstraße 100 73240 Wendlingen Germany
Contact Person:	Mr. Bernd Thalheimer

3.4 MANUFACTURER DATA

Company Name:	please see Applicant Data

4 TEST OBJECT DATA

4.1 GENERAL EUT DESCRIPTION

Kind of Device product description	WLAN transceiver: AC/DC conversion for charging EVs (electrical vehicles)
Product name	Porsche Wall Charger Connect
Type	PWCCU192A
Declared EUT data by the supplier	
Voltage Type	AC
Voltage Level	120/208-240 V / 50 or 60 Hz, tested at 120 V / 60 Hz
Antenna / Gain	4.3 dBi
Tested Modulation Type	BPSK; OFDM: BPSK
General product description	Wall Charger
Specific product description for the EUT	The EUT is a box intended to be wall-mounted that includes an AC/DC power converter which is intended to charge batteries of electrical vehicles. The EUT contains a WLAN transceiver.
EUT ports (connected cables during testing):	Enclosure, AC Mains, DC outlet (to charge vehicles)
Tested data rates / set nominal RF power	b-mode: 1 Mbps (20 MHz) / 11 dBm g-mode: 6 Mbps (20 MHz) / 12 dBm n-mode: MCS0 (20 MHz, 40 MHz) / 11 dBm
Special software used for testing	no (the software provided for testing only grants additionally access into development menus but will not be accessible to the end user)

4.2 EUT MAIN COMPONENTS

Sample Name	**Sample Code**	**Description**
Sample#1	DE1323001aa01	Standard sample
Sample Parameter	**Value**	
Serial No.	0000013	
HW Version	003	
SW Version	SW_C:6010, SW_P: 5110	
Comment	–	

Sample Name	**Sample Code**	**Description**
Sample#2	DE1323001ab01	Standard sample
Sample Parameter	**Value**	
Serial No.	0000027	
HW Version	003	
SW Version	SW_C:6010, SW_P: 5110	
Comment	–	

NOTE: The short description is used to simplify the identification of the EUT in this test report.

4.3 ANCILLARY EQUIPMENT

For the purposes of this test report, ancillary equipment is defined as equipment which is used in conjunction with the EUT to provide operational and control features to the EUT. It is necessary to configure the system in a typical fashion, as a customer would normally use it. But nevertheless Ancillary Equipment can influence the test results.

Device	**Details (Manufacturer, Type Model, OUT Code)**	**Description**
-	-	-

4.4 AUXILIARY EQUIPMENT

For the purposes of this test report, auxiliary equipment is defined as equipment which is used temporarily to enable operational and control features especially used for the tests of the EUT which is not used during normal operation or equipment that is used during the tests in combination with the EUT but is not subject of this test report. It is necessary to configure the system in a typical fashion, as a customer would normally use it.
But nevertheless Auxiliary Equipment can influence the test results.

Device	**Details (Manufacturer, Type Model, HW, SW, S/N)**	**Description**
-	-	-

4.5 EUT SETUPS

This chapter describes the combination of EUTs and equipment used for testing. The rationale for selecting the EUTs, ancillary and auxiliary equipment and interconnecting cables, is to test a representative configuration meeting the requirements of the referenced standards.

Setup	**Combination of EUTs**	**Description and Rationale**
S01_AA01	Sample DE1323001aa01	(stand-alone testing)
S01_AB01	Sample DE1323001ab01	(stand-alone testing)

4.6 TEST CHANNELS

WLAN	**2.4 GHz ISM 2400 - 2483.5 MHz**		
20 MHz Test Channels:	**low**	**mid**	**high**
Channel:	1	6	11
Frequency [MHz]	2412	2437	2462

40 MHz Test Channels:	**low**	**mid**	**high**
Channel:	3	6	11
Frequency [MHz]	2422	2437	2462

4.7 PRODUCT LABELLING

Please refer to the documentation of the applicant.

5 TEST RESULTS

5.1 CONDUCTED EMISSIONS AT AC MAINS

Standard **FCC Part 15 Subpart C**

The test was performed according to:
ANSI C63.10

5.1.1 TEST DESCRIPTION

The test set-up was made in accordance to the general provisions of ANSI C 63.10
The Equipment Under Test (EUT) was setup in a shielded room to perform the conducted emissions measurements in a typical installation configuration. The EUT was powered from 50µH || 50 Ohm Line Impedance Stabilization Network (LISN). The LISN's unused connections were terminated with 50 Ohm loads.

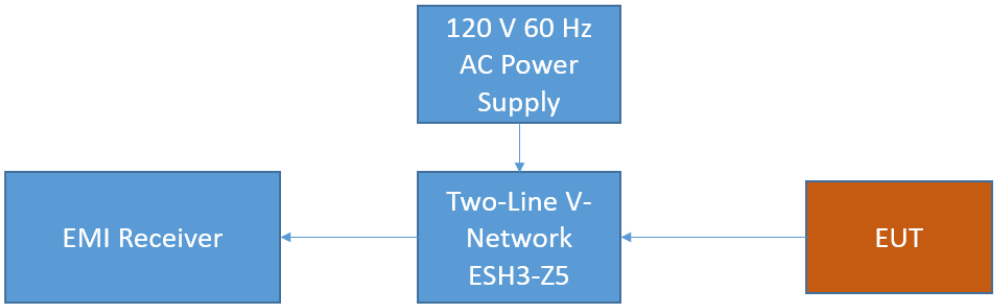

FCC Conducted Emissions on AC

The measurement procedure consists of two steps. It is implemented into the EMI test software EMC-32 from R&S.

Step 1: Preliminary scan
Intention of this step is, to determine the conducted EMI-profile of the EUT.
EMI receiver settings:
- Detector: Peak – Maxhold & Average
- Frequency range: 150 kHz – 30 MHz
- Frequency steps: 2.5 kHz
- IF–Bandwidth: 9 kHz
- Measuring time / Frequency step: 100 ms (FFT-based)
- Measurement on phase + neutral lines of the power cords

On basis of this preliminary scan the highest amplitudes and the corresponding frequencies relative to the limit are identified. Emissions above the limit and emissions which are in the 10 dB range below the limit are considered.

Step 2: Final measurement
Intention of this step is, to determine the highest emissions with the settings defined in the test specification for the frequencies identified in step 1.
EMI receiver settings:
- Detector: Quasi-Peak & (CISPR) Average
- IF Bandwidth: 9 kHz
- Measuring time: 1 s / frequency

At each frequency determined in step 1, four measurements are performed in the following combinations:
1) Neutral lead - reference ground (PE grounded)
2) Phase lead - reference ground (PE grounded)
3) Neutral lead - reference ground (PE floating)
4) Phase lead - reference ground (PE floating)

The highest value is reported.

5.1.2 TEST REQUIREMENTS / LIMITS

FCC Part 15, Subpart C, §15.207

Frequency (MHz)	QP Limits (dBµV)	AV Limits (dBµV)
0.15 – 0.5	66 - 56	56 - 46
0.5 - 5	56	46
5 - 30	60	50

Used conversion factor: Limit (dBµV) = 20 log (Limit (µV)/1µV).

5.1.3 TEST PROTOCOL

Temperature: 21 °C
Air Pressure: 1002 hPa
Humidity: 36 %

Power line	**PE**	**Frequency [MHz]**	**Measured value QP [dBµV]**	**Measured value AV [dBµV]**	**Limit [dBµV]**	**Margin [dB]**
L1	FLO	0.269	---	32.4	51.1	18.7
N	GND	2.047	---	33.0	46.0	13.1
N	GND	2.085	---	29.1	46.0	16.9
N	GND	2.126	---	27.9	46.0	18.1
N	GND	2.146	---	27.1	46.0	18.9
L1	GND	13.673	45.9	---	60.0	14.1
N	GND	20.315	43.8	---	60.0	16.2
N	GND	20.513	44.7	---	60.0	15.3
N	GND	20.933	---	35.2	50.0	14.8

Remark: Please see next sub-clause for the measurement plot.

5.1.4 MEASUREMENT PLOT (EXAMPLE PLOT, SHOWING WORST CASE, IF APPLICABLE)

Operating mode = worst case, Connection to AC mains = direct (S01_AA01)

Common Information

Test Description:	Conducted Emissions
Test Standard:	FCC §15.207, ANSI C63.10
EUT / Setup Code:	DE1323001aa01
Operating Conditions:	120 V 60 Hz, WLAN 2.4 GHz band, TX CH6 (2437 MHz)
Comment:	nominal WLAN power set to 11 dBm, mode b, 1 Mbps
Legend:	Trace: blue = QP, green = CISPR AV; Star: red or blue = critical frequency; Rhombus: blue = final QP, green = final CISPR AV
Tested Port / used LISN:	AC mains => 1st LISN ESH3-Z5
Termination of other ports:	-

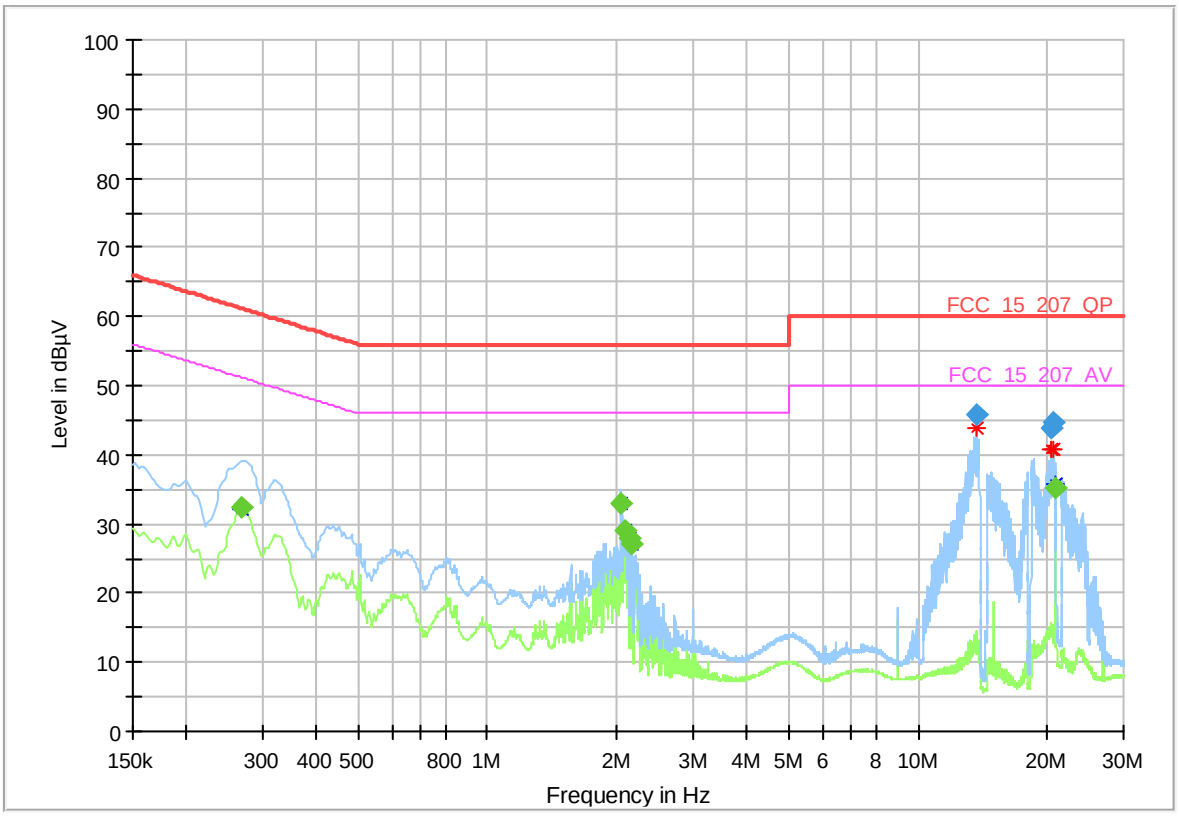

Final_Result

Frequency (MHz)	QuasiPeak (dBµV)	CAverage (dBµV)	Limit (dBµV)	Margin (dB)	Meas. Time	Bandwidth (kHz)	Line	PE	Corr. (dB)
0.269250	---	32.42	51.14	18.72	1000.0	9.000	L1	FLO	10.1
2.046750	---	32.95	46.00	13.05	1000.0	9.000	N	GND	10.2
2.085000	---	29.09	46.00	16.91	1000.0	9.000	N	GND	10.2
2.125500	---	27.93	46.00	18.07	1000.0	9.000	N	GND	10.2
2.145750	---	27.09	46.00	18.91	1000.0	9.000	N	GND	10.2
13.672500	45.94	---	60.00	14.06	1000.0	9.000	L1	GND	10.8
20.314500	43.84	---	60.00	16.16	1000.0	9.000	N	GND	11.0
20.512500	44.70	---	60.00	15.30	1000.0	9.000	N	GND	11.0
20.933250	---	35.17	50.00	14.83	1000.0	9.000	N	GND	11.1

5.1.5 TEST EQUIPMENT USED

- Conducted Emissions FCC

5.2 TRANSMITTER SPURIOUS RADIATED EMISSIONS

Standard **FCC Part 15 Subpart C**

The test was performed according to:
ANSI C63.10

5.2.1 TEST DESCRIPTION

The test set-up was made in accordance to the general provisions of ANSI C63.10 in a typical installation configuration. The measurements were performed according the following sub-chapters of ANSI C63.10:

- < 30 MHz: Chapter 6.4
- 30 MHz – 1 GHz: Chapter 6.5
- > 1 GHZ: Chapter 6.6 (procedure according 6.6.5 used)

The measurement procedure is implemented into the EMI test software EMC32 from R&S. Exploratory tests are performed at 3 orthogonal axes to determine the worst-case orientation of a body-worn or handheld EUT. The final test on all kind of EUTs is also performed at 3 axes. A pre-check is performed while the EUT is powered.

Below 1 GHz:

The Equipment Under Test (EUT) was set up on a non-conductive table in the semi-anechoic chamber. The influence of the EUT support table that is used between 30–1000 MHz was evaluated.

1. Measurement up to 30 MHz

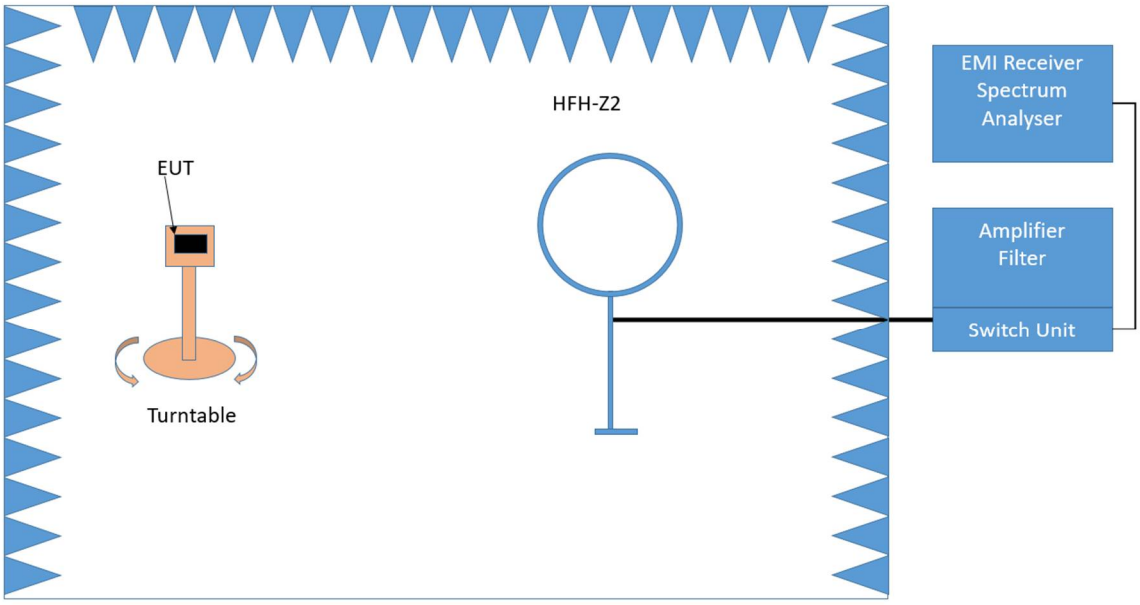

Test Setup; Spurious Emission Radiated (SAC), 9 kHz – 30 MHz

The Loop antenna HFH2-Z2 is used.

Step 1: pre measurement

- Anechoic chamber
- Antenna distance: 3 m
- Antenna height: 1 m
- Detector: Peak-Maxhold
- Frequency range: 0.009 - 0.15 MHz and 0.15 – 30 MHz
- Frequency steps: 0.05 kHz and 2.25 kHz
- IF–Bandwidth: 0.2 kHz and 9 kHz
- Measuring time / Frequency step: 100 ms (FFT-based)

Intention of this step is, to determine the radiated EMI-profile of the EUT. Afterwards the relevant emissions for the final measurement are identified.

Step 2: final measurement

For the relevant emissions determined in step 1, an additional measurement with the following settings will be performed. Intention of this step is to find the maximum emission level.

- Detector: Quasi-Peak (9 kHz – 150 kHz, Peak / Average 150 kHz- 30 MHz)
- Frequency range: 0.009 – 30 MHz
- Frequency steps: measurement at frequencies detected in step 1
- IF–Bandwidth: 0.2 - 10 kHz
- Measuring time / Frequency step: 1 s

2. Measurement above 30 MHz and up to 1 GHz

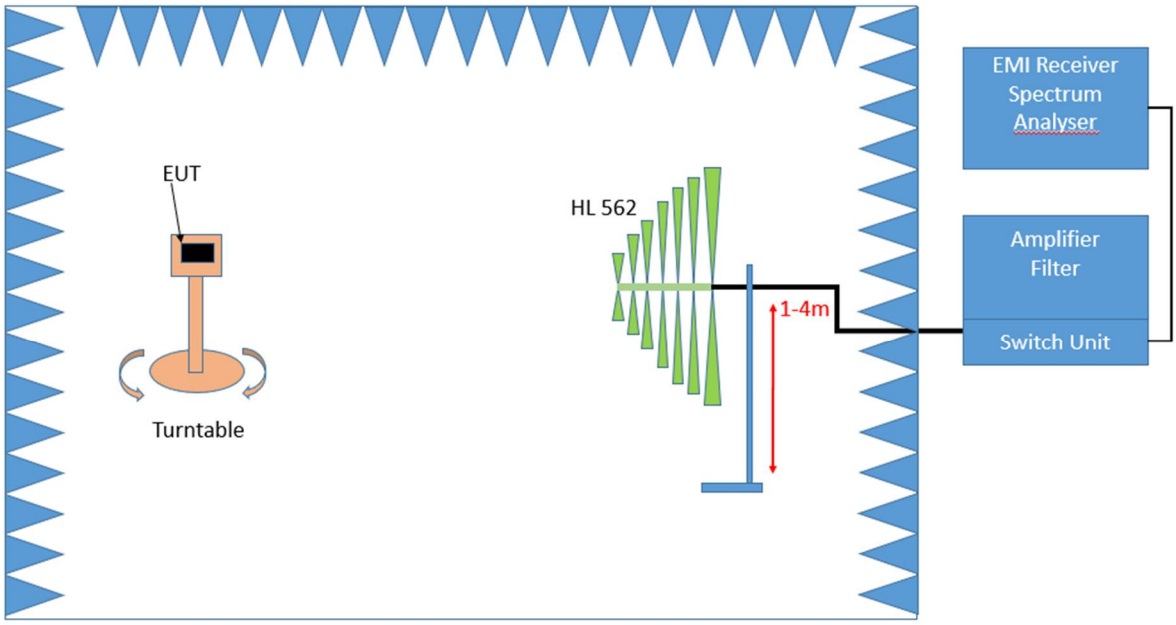

Test Setup; Spurious Emission Radiated (SAC), 30 MHz- 1GHz

Step 1: Preliminary scan

This is a preliminary test to identify the highest amplitudes relative to the limit.
Settings for step 1:
- Antenna distance: 3 m
- Detector: Peak-Maxhold / Quasipeak (FFT-based)
- Frequency range: 30 – 1000 MHz
- Frequency steps: 30 kHz
- IF–Bandwidth: 120 kHz
- Measuring time / Frequency step: 100 ms
- Turntable angle range: –180° to 90°
- Turntable step size: 90°
- Height variation range: 1 – 4 m

- Height variation step size: 1.5 m
- Polarisation: Horizontal + Vertical

Intention of this step is, to determine the radiated EMI-profile of the EUT. Afterwards the relevant emissions for the final measurement are identified.

Step 2: Adjustment measurement

In this step the accuracy of the turntable azimuth and antenna height will be improved. This is necessary to find out the maximum value of every frequency.

For each frequency, which was determined the turntable azimuth and antenna height will be adjusted. The turntable azimuth will slowly vary by 360° around this value. During this action, the value of emission is continuously measured. The turntable azimuth at the highest emission will be recorded and adjusted. In this position, the antenna height will also slowly vary by 1-4 m around the antenna height determined. During this action, the value of emission is also continuously measured. The antenna height of the highest emission will also be recorded and adjusted.

- Detector: Peak – Maxhold
- Measured frequencies: in step 1 determined frequencies
- IF – Bandwidth: 120 kHz
- Measuring time: 100 ms
- Turntable angle range: 360°
- Height variation range:1 – 4 m
- Antenna Polarisation: max. value determined in step 1

Step 3: Final measurement with QP detector

With the settings determined in step 2, the final measurement will be performed:

EMI receiver settings for step 3:

- Detector: Quasi-Peak (< 1 GHz)
- Measured frequencies: in step 1 determined frequencies
- IF – Bandwidth: 120 kHz
- Measuring time: 1 s

After the measurement a plot will be generated which contains a diagram with the results of the preliminary scan and a chart with the frequencies and values of the results of the final measurement.

Above 1 GHz:

The Equipment Under Test (EUT) was set up on a non-conductive support (tilt device) at 1.5 m height in the fully-anechoic chamber.
All steps were performed with one height (1.5 m) of the receiving antenna only.

3. Measurement above 1 GHz

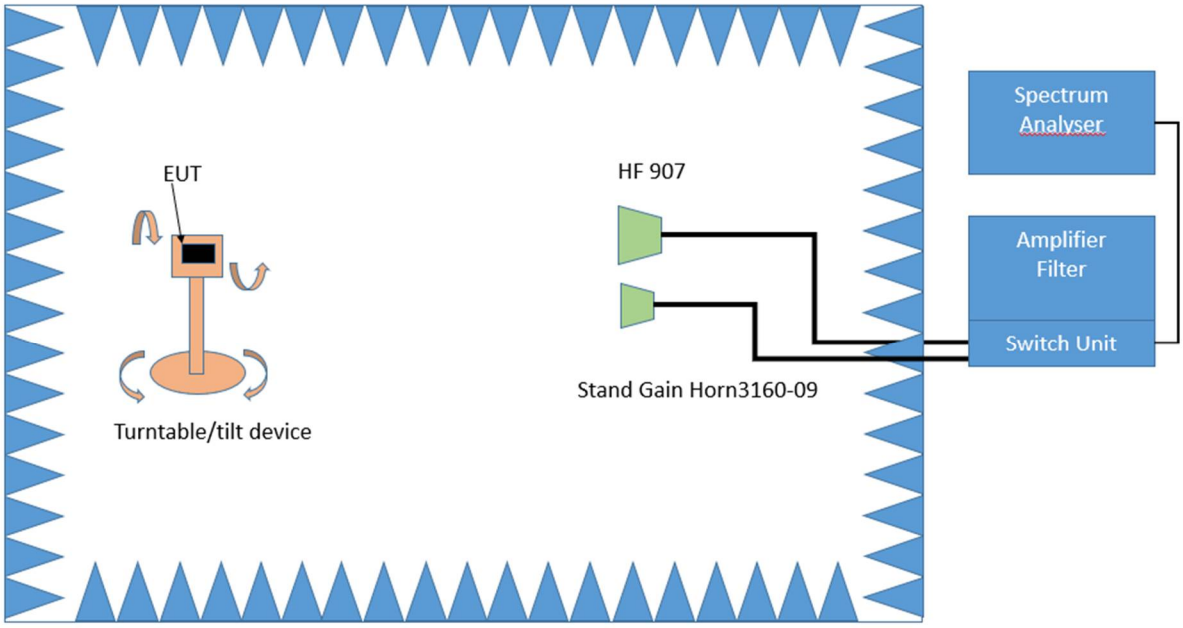

Test Setup; Spurious Emission Radiated (FAC), 1 GHz-26.5 GHz

Step 1:
The EUT is turned during the preliminary measurement across the elevation axis, with a step size of 90 °.
The turn table step size (azimuth angle) for the preliminary measurement is 45 °.
Spectrum analyser settings:
- Detector: Peak, Average
- RBW = 1 MHz
- VBW = 3 MHz

Step 2:
The turn table azimuth will slowly vary by ± 22.5°.
The elevation angle will slowly vary by ± 45°
Spectrum analyser settings:
- Detector: Peak

Step 3:
Spectrum analyser settings for step 3:
- Detector: Peak / CISPR Average
- Measured frequencies: in step 1 determined frequencies
- RBW = 1 MHz
- VBW = 3 MHz
- Measuring time: 1 s

5.2.2 TEST REQUIREMENTS / LIMITS

FCC Part 15, Subpart C, §15.247 (d)
... In addition, radiated emissions which fall in the restricted bands, as defined in Section 15.205(a), must also comply with the radiated emission limits specified in Section 15.209(a) (see Section 15.205(c)).

FCC Part 15, Subpart C, §15.209, Radiated Emission Limits

Frequency in MHz	Limit (µV/m)	Measurement distance (m)	Limits (dBµV/m)
0.009 – 0.49	2400/F(kHz)@300m	3	(48.5 – 13.8)@300m
0.49 – 1.705	24000/F(kHz)@30m	3	(33.8 – 23.0)@30m
1.705 – 30	30@30m	3	29.5@30m

The measured values are corrected with an inverse linear distance extrapolation factor (40 dB/decade) according FCC 15.31 (2).

Frequency in MHz	Limit (µV/m)	Measurement distance (m)	Limits (dBµV/m)
30 – 88	100@3m	3	40.0@3m
88 – 216	150@3m	3	43.5@3m
216 – 960	200@3m	3	46.0@3m
960 - 26000	500@3m	3	54.0@3m
26000 - 40000	500@3m	1	54.0@3m

The measured values above 26 GHz are corrected with an inverse linear distance extrapolation factor (20 dB/decade).

§15.35(b) ..., there is also a limit on the radio frequency emissions, as measured using instrumentation with a peak detector function, corresponding to 20 dB above the maximum permitted average limit....

Used conversion factor: Limit (dBµV/m) = 20 log (Limit (µV/m)/1µV/m)

5.2.3 TEST PROTOCOL

Ambient temperature: 21–24 °C
Air Pressure: 996–1003 hPa
Humidity: 30–35 %
WLAN b-Mode; 20 MHz; 1 Mbit/s
Applied duty cycle correction (AV): 0.0 dB

Ch. No.	Ch. Center Freq. [MHz]	Spurious Freq. [MHz]	Spurious Level [dBµV/m]	Detec-tor	RBW [kHz]	Limit [dBµV/m]	Margin to Limit [dB]	Limit Type
1	2412	-	-	- - -	-	- - -	-	RB
6	2437	-	-	- - -	-	- - -	-	RB
11	2462	2487.0	56.9	PEAK	1000	74.0	17.1	RB
11	2462	2487.0	37.1	AV	1000	54.0	16.9	RB

WLAN g-Mode; 20 MHz; 6 Mbit/s
Applied duty cycle correction (AV): 0.0 dB

Ch. No.	Ch. Center Freq. [MHz]	Spurious Freq. [MHz]	Spurious Level [dBµV/m]	Detec-tor	RBW [kHz]	Limit [dBµV/m]	Margin to Limit [dB]	Limit Type
1	2412	-	-	- - -	-	-	-	RB
6	2437	-	-	- - -	-	-	-	RB
11	2462	-	-	- - -	-	-	-	RB

Remark: Please see next sub-clause for the measurement plot.

5.2.4 MEASUREMENT PLOT (EXAMPLE PLOT, SHOWING WORST CASE, IF APPLICABLE)

Radio Technology = WLAN b, Operating Frequency = mid, Measurement range = 9 kHz - 30 MHz (S01_AB01)

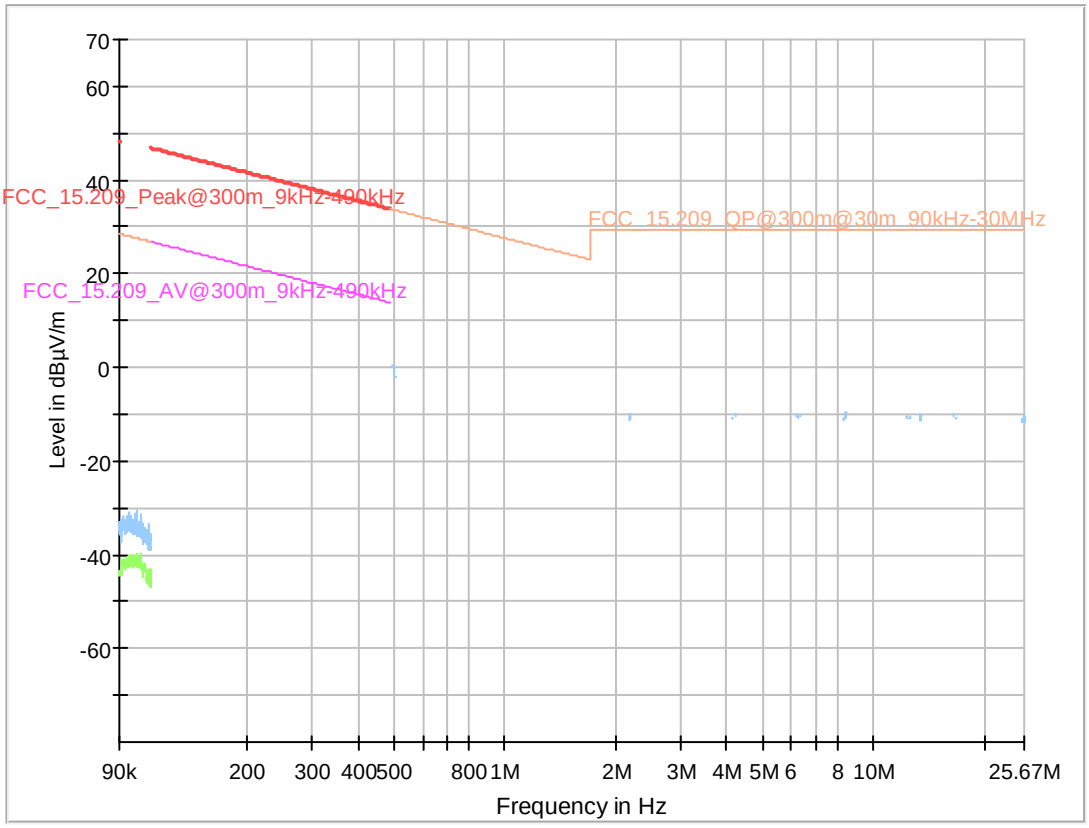

Final_Result

Frequency (MHz)	MaxPeak (dBµV/m)	Limit (dBµV/m)	Margin (dB)	Meas. Time (ms)	Bandwidth (kHz)	Height (cm)	Azimuth (deg)	Corr. (dB/m)
---	---	---	---	---	---	---	---	---

Legend: Trace: blue = Peak; green = AV, Star: = critical frequency; Rhombus: blue = final QP

Radio Technology = WLAN b, Operating Frequency = low, Measurement range = 30 MHz - 1 GHz (S01_AB01)

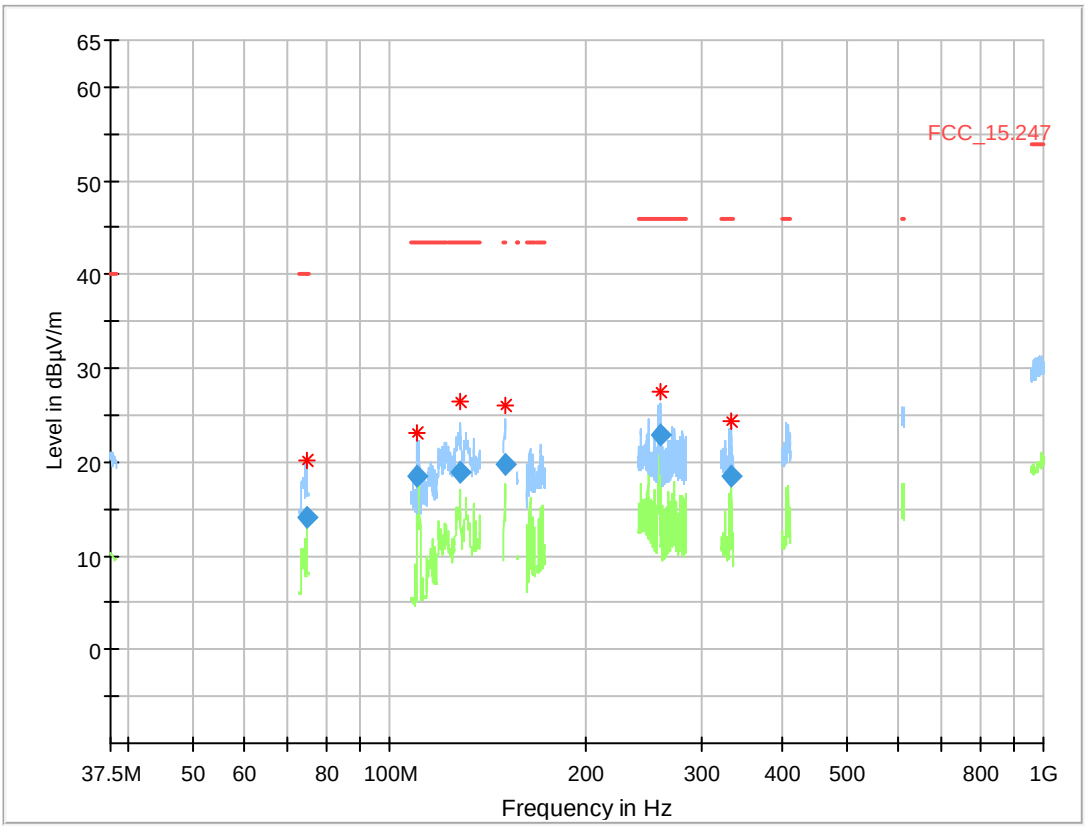

Final_Result

Frequency (MHz)	QuasiPeak (dBµV/m)	Limit (dBµV/m)	Margin	Meas. Time (ms)	Bandwidth	Height	Pol	Azimuth	Corr. (dB/m)	Comment
74.830000	14.14	40.00	25.86	1000.0	120.000	108.0	V	71.0	9.5	
110.340000	18.58	43.50	24.92	1000.0	120.000	136.0	H	96.0	11.2	
128.670000	18.83	43.50	24.67	1000.0	120.000	200.0	H	107.0	10.5	
149.990000	19.83	43.50	23.67	1000.0	120.000	159.0	H	-3.0	9.2	
259.740000	22.88	46.00	23.12	1000.0	120.000	103.0	H	68.0	11.6	
332.230000	18.43	46.00	27.57	1000.0	120.000	128.0	V	18.0	14.2	

Radio Technology = WLAN b, Operating Frequency = high, Measurement range = 1 GHz - 26 GHz (S01_AA01)

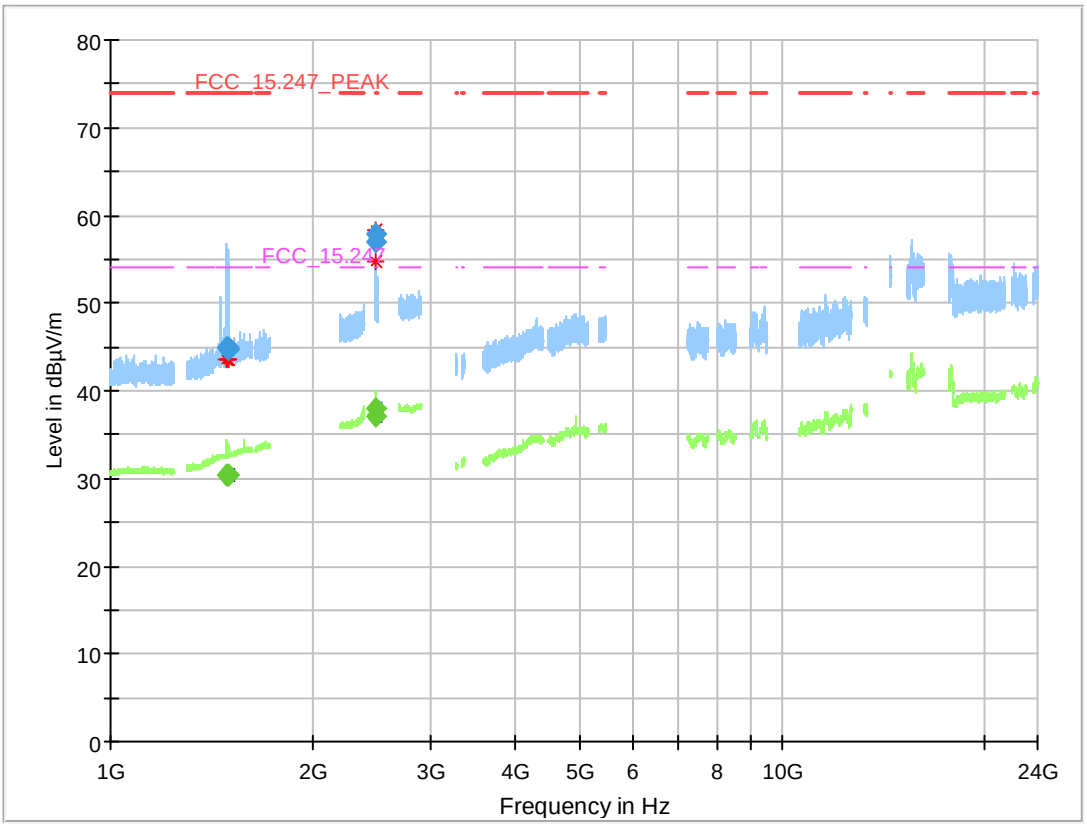

Final_Result

Frequency (MHz)	MaxPeak (dBµV/m)	CAverage (dBµV/m)	Limit (dBµV/m)	Margin (dB)	Meas. Time (ms)	Bandwidth (kHz)	Height (cm)	Pol	Azimuth (deg)	Corr. (dB/m)	Comment
1488.046	---	30.3	54.00	23.70	1000.0	1000.000	150.0	H	110.0	0.5	
1488.046	45.0	---	74.00	29.01	1000.0	1000.000	150.0	H	118.0	0.5	
1496.280	---	30.4	54.00	23.63	1000.0	1000.000	150.0	H	131.0	0.6	
1496.280	44.7	---	74.00	29.26	1000.0	1000.000	150.0	H	127.0	0.6	
1500.302	---	30.4	54.00	23.60	1000.0	1000.000	150.0	H	118.0	0.6	
1500.302	44.8	---	74.00	29.19	1000.0	1000.000	150.0	H	122.0	0.6	
2483.748	---	38.0	54.00	16.01	1000.0	1000.000	150.0	V	-90.0	5.4	BE
2483.748	58.0	---	74.00	16.04	1000.0	1000.000	150.0	V	-90.0	5.4	BE
2486.965	---	37.1	54.00	16.93	1000.0	1000.000	150.0	V	-89.0	5.4	
2487.048	56.9	---	74.00	17.06	1000.0	1000.000	150.0	V	-109.0	5.4	

Radio Technology = WLAN g, Operating Frequency = high, Measurement range = 1 GHz - 26 GHz (S01_AB01)

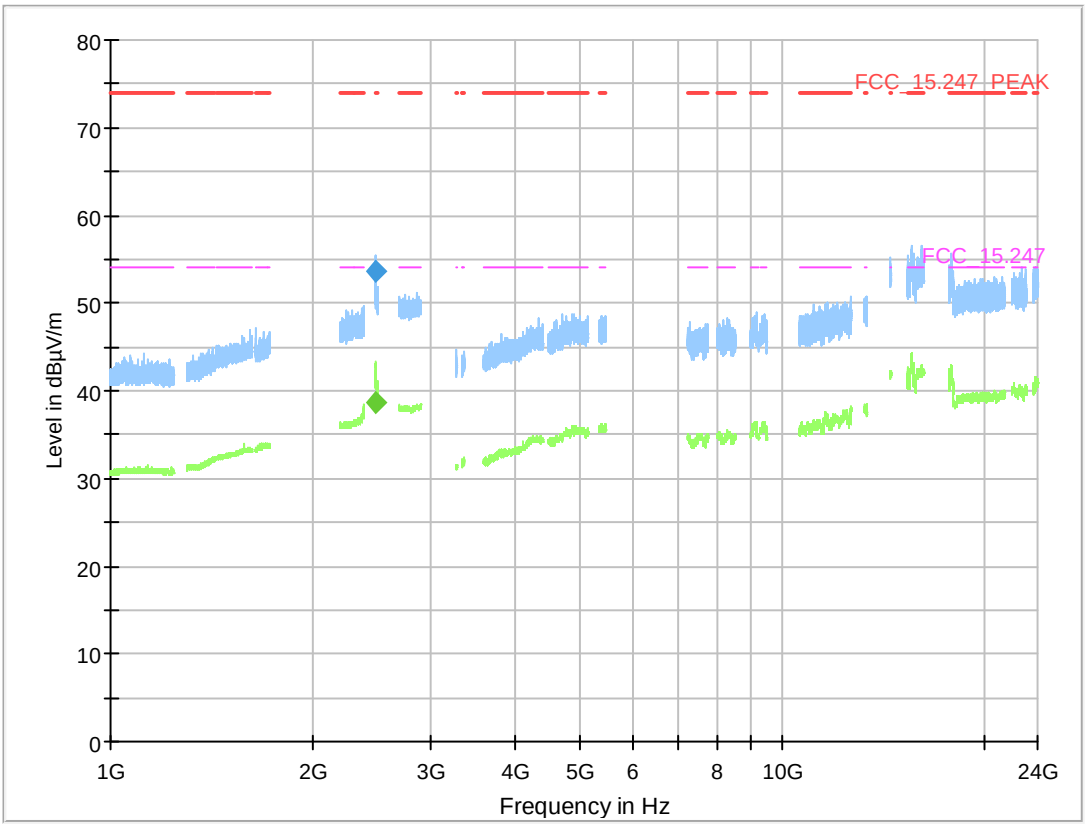

Final_Result

Frequency (MHz)	MaxPeak (dBµV/m)	CAverage (dBµV/m)	Limit (dBµV/m)	Margin (dB)	Meas. Time (ms)	Bandwidth (kHz)	Height (cm)	Pol	Azimuth (deg)	Corr. (dB/m)	Comment
2483.500	---	38.6	54.00	15.43	1000.0	1000.000	150.0	V	-131.0	5.4	BE
2483.500	53.5	---	74.00	20.48	1000.0	1000.000	150.0	V	-131.0	5.4	BE

5.2.5 TEST EQUIPMENT USED

- Radiated Emissions

5.3 BAND EDGE COMPLIANCE RADIATED

Standard **FCC Part 15 Subpart C**

The test was performed according to:
ANSI C63.10

5.3.1 TEST DESCRIPTION

The test set-up was made in accordance to the general provisions of ANSI C63.10 in a typical installation configuration. The measurements were performed according the following sub-chapter of ANSI C63.10:

- Chapter 6.10.5

The Equipment Under Test (EUT) was set up on a non-conductive support (tilt device) at 1.5 m height in the fully-anechoic chamber.
All steps were performed with one height (1.5 m) of the receiving antenna only (procedure according ANSI C63.10, chapter 6.6.5.

Measurement above 1 GHz

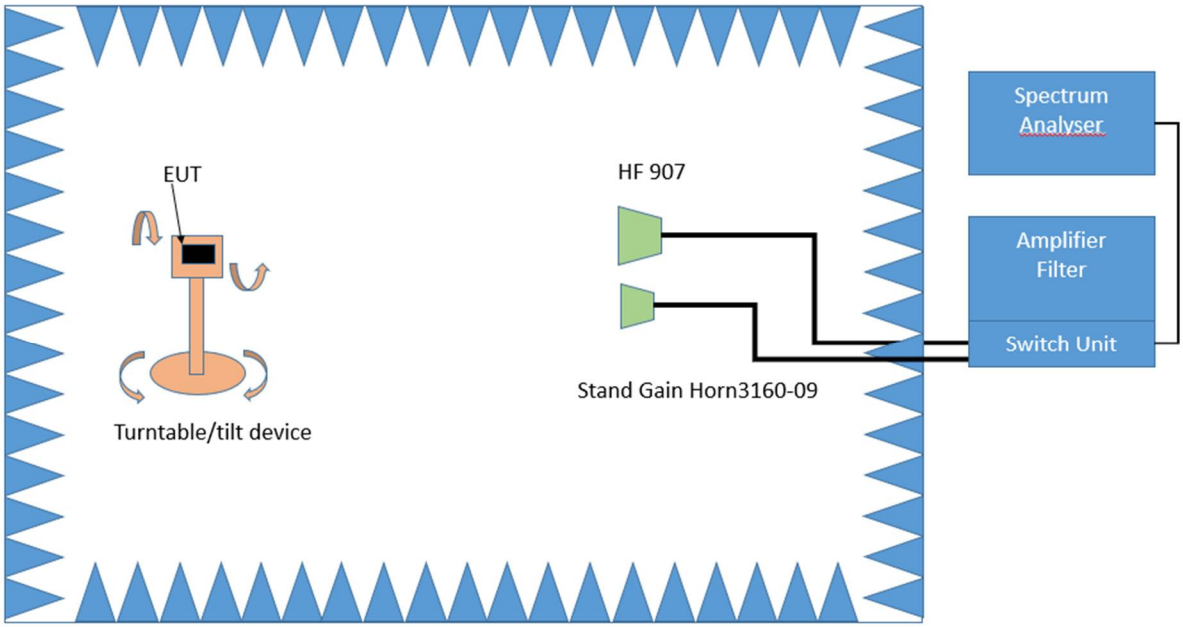

Test Setup; Spurious Emission Radiated (FAC), 1 GHz-26.5 GHz

Step 1:
The EUT is turned during the preliminary measurement across the elevation axis, with a step size of 90 °.
The turn table step size (azimuth angle) for the preliminary measurement is 45 °.
Spectrum analyser settings:
- Detector: Peak, Average
- RBW = 1 MHz
- VBW = 3 MHz

Step 2:
The turn table azimuth will slowly vary by ± 22.5°.
The elevation angle will slowly vary by ± 45°
Spectrum analyser settings:
- Detector: Peak

Step 3:
Spectrum analyser settings for step 3:
- Detector: Peak / CISPR Average
- Measured frequencies: in step 1 determined frequencies
- RBW = 1 MHz
- VBW = 3 MHz
- Measuring time: 1 s

5.3.2 TEST REQUIREMENTS / LIMITS

For band edges connected to a restricted band, the limits are specified in Section 15.209(a)

FCC Part 15, Subpart C, §15.209, Radiated Emission Limits

Frequency in MHz	Limit (µV/m)	Measurement distance (m)	Limits (dBµV/m)
0.009 – 0.49	2400/F(kHz)@300m	3	(48.5 – 13.8)@300m
0.49 – 1.705	24000/F(kHz)@30m	3	(33.8 – 23.0)@30m
1.705 – 30	30@30m	3	29.5@30m

The measured values are corrected with an inverse linear distance extrapolation factor (40 dB/decade) according FCC 15.31 (2).

Frequency in MHz	Limit (µV/m)	Measurement distance (m)	Limits (dBµV/m)
30 – 88	100@3m	3	40.0@3m
88 – 216	150@3m	3	43.5@3m
216 – 960	200@3m	3	46.0@3m
960 - 26000	500@3m	3	54.0@3m
26000 - 40000	500@3m	1	54.0@3m

The measured values above 26 GHz are corrected with an inverse linear distance extrapolation factor (20 dB/decade).

§15.35(b) ..., there is also a limit on the radio frequency emissions, as measured using instrumentation with a peak detector function, corresponding to 20 dB above the maximum permitted average limit....

Used conversion factor: Limit (dBµV/m) = 20 log (Limit (µV/m)/1µV/m)

5.3.3 TEST PROTOCOL

Ambient temperature: 21–24 °C
Air Pressure: 996–1003 hPa
Humidity: 30–35 %
WLAN b-Mode; 20 MHz; 1 Mbit/s
Applied duty cycle correction (AV): 0 dB

Ch. No.	Ch. Center Freq. [MHz]	Band Edge Freq. [MHz]	Spurious Level [dBµV/m]	Detec-tor	RBW [kHz]	Limit [dBµV/m]	Margin to Limit [dB]
11	2462	2483.5	58.0	PEAK	1000	74.0	16.0
11	2462	2483.5	38.0	AV	1000	54.0	16.0

WLAN g-Mode; 20 MHz; 6 Mbit/s
Applied duty cycle correction (AV): 0 dB

Ch. No.	Ch. Center Freq. [MHz]	Band Edge Freq. [MHz]	Spurious Level [dBµV/m]	Detec-tor	RBW [kHz]	Limit [dBµV/m]	Margin to Limit [dB]
11	2462	2483.5	53.5	PEAK	1000	74.0	20.5
11	2462	2483.5	38.6	AV	1000	54.0	15.4

WLAN n-Mode; 20 MHz; MCS0
Applied duty cycle correction (AV): 0 dB

Ch. No.	Ch. Center Freq. [MHz]	Band Edge Freq. [MHz]	Spurious Level [dBµV/m]	Detec-tor	RBW [kHz]	Limit [dBµV/m]	Margin to Limit [dB]
11	2462	2483.5	57.7	PEAK	1000	74.0	16.3
11	2462	2483.5	38.7	AV	1000	54.0	15.3

WLAN n-Mode; 40 MHz; MCS0
Applied duty cycle correction (AV): 0 dB

Ch. No.	Ch. Center Freq. [MHz]	Band Edge Freq. [MHz]	Spurious Level [dBµV/m]	Detec-tor	RBW [kHz]	Limit [dBµV/m]	Margin to Limit [dB]
9	2452	2483.5	65.5	PEAK	1000	74.0	8.5
9	2452	2483.5	43.8	AV	1000	54.0	10.2

Remark: Please see next sub-clause for the measurement plot.

5.3.4 MEASUREMENT PLOT (EXAMPLE PLOT, SHOWING WORST CASE, IF APPLICABLE)

Radio Technology = WLAN b, Operating Frequency = high, Band Edge = high (S01_AA01)

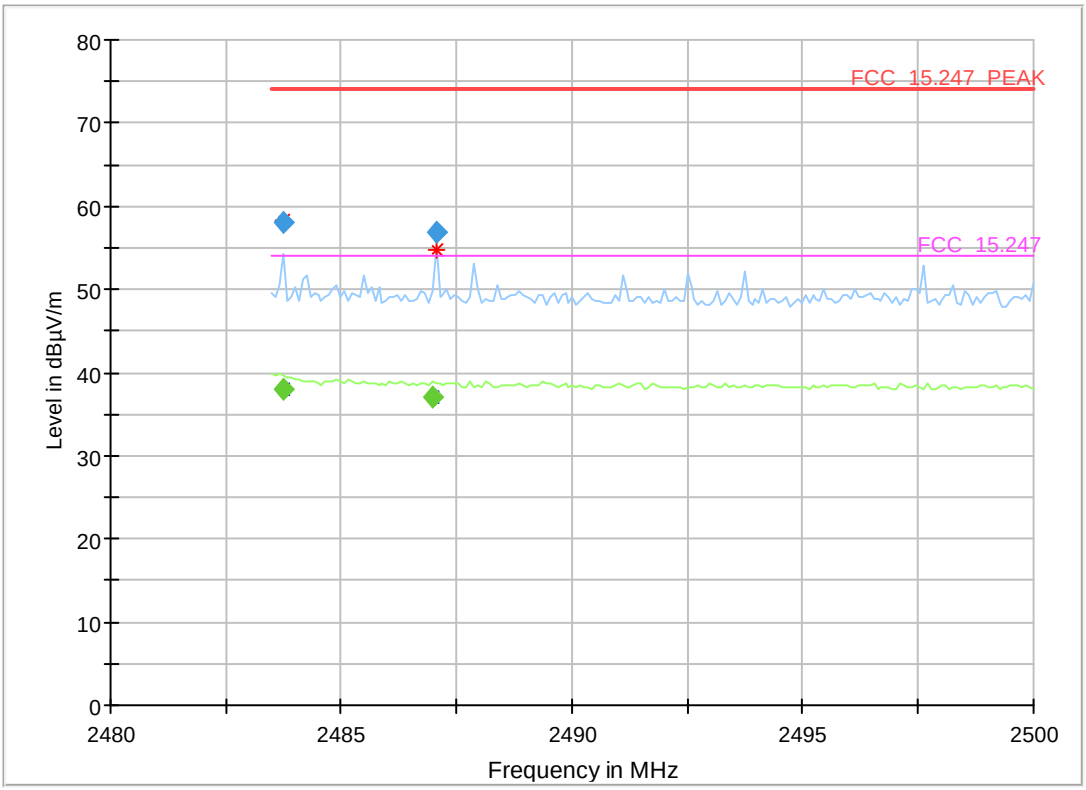

Final_Result

Frequency (MHz)	MaxPeak (dBµV/m)	CAverage (dBµV/m)	Limit (dBµV/m)	Margin (dB)	Meas. Time (ms)	Bandwidth (kHz)	Height (cm)	Pol	Azimuth (deg)	Corr. (dB/m)	Comment
2483.748	---	38.0	54.00	16.01	1000.0	1000.000	150.0	V	-90.0	5.4	BE
2483.748	58.0	---	74.00	16.04	1000.0	1000.000	150.0	V	-90.0	5.4	BE
2486.965	---	37.1	54.00	16.93	1000.0	1000.000	150.0	V	-89.0	5.4	
2487.048	56.9	---	74.00	17.06	1000.0	1000.000	150.0	V	-109.0	5.4	

Radio Technology = WLAN g, Operating Frequency = high, Band Edge = high (S01_AB01)

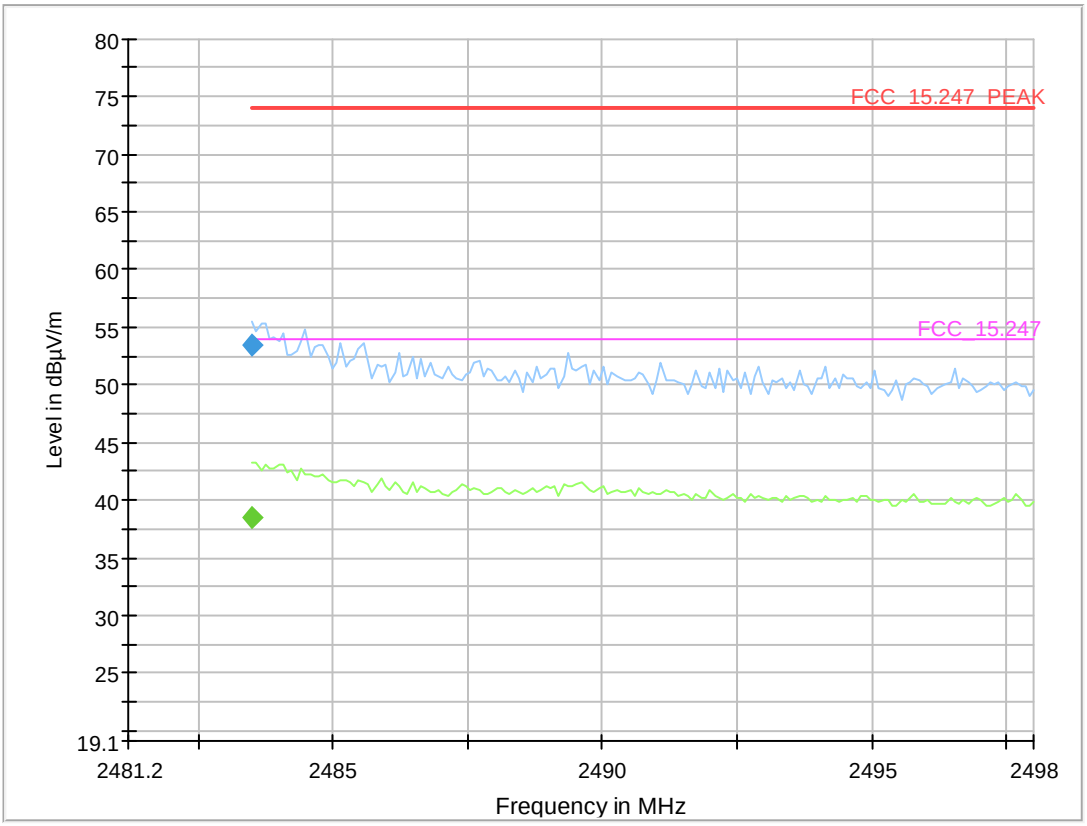

Final_Result

Frequency (MHz)	MaxPeak (dBµV/m)	CAverage (dBµV/m)	Limit (dBµV/m)	Margin (dB)	Meas. Time (ms)	Bandwidth (kHz)	Height (cm)	Pol	Azimuth (deg)	Corr. (dB/m)	Comment
2483.500	---	38.6	54.00	15.43	1000.0	1000.000	150.0	V	-131.0	5.4	
2483.500	53.5	---	74.00	20.48	1000.0	1000.000	150.0	V	-131.0	5.4	

Radio Technology = WLAN n 20 MHz, Operating Frequency = high, Band Edge = high (S01_AB01)

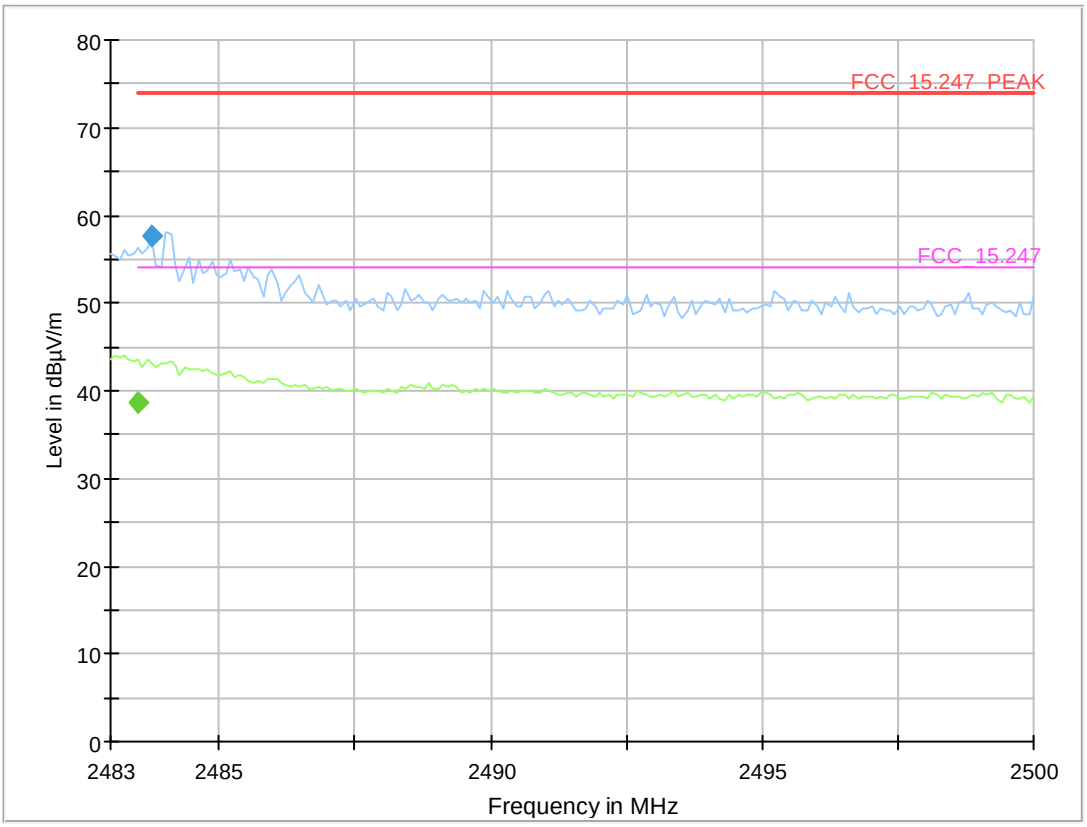

Final_Result

Frequency (MHz)	MaxPeak (dBµV/m)	CAverage (dBµV/m)	Limit (dBµV/m)	Margin (dB)	Meas. Time (ms)	Bandwidth (kHz)	Height (cm)	Pol	Azimuth (deg)	Corr. (dB/m)	Comment
2483.510	---	38.7	54.00	15.25	1000.0	1000.000	150.0	V	-131.0	5.4	
2483.765	57.7	---	74.00	16.34	1000.0	1000.000	150.0	V	-101.0	5.4	

Radio Technology = WLAN n 40 MHz, Operating Frequency = high, Band Edge = high (S01_AB01)

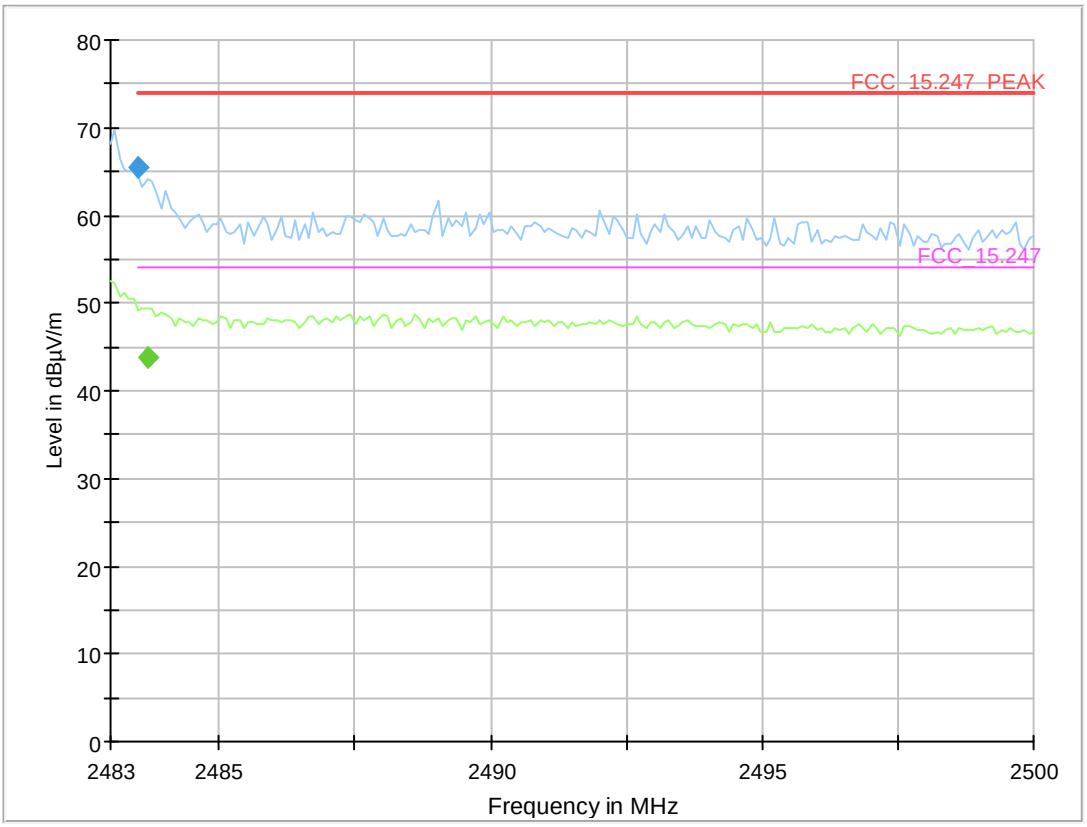

Final_Result

Frequency (MHz)	MaxPeak (dBµV/m)	CAverage (dBµV/m)	Limit (dBµV/m)	Margin (dB)	Meas. Time (ms)	Bandwidth (kHz)	Height (cm)	Pol	Azimuth (deg)	Corr. (dB/m)	Comment
2483.510	65.5	---	74.00	8.47	1000.0	1000.000	150.0	V	-131.0	5.4	
2483.680	---	43.8	54.00	10.16	1000.0	1000.000	150.0	V	-131.0	5.4	

5.3.5 TEST EQUIPMENT USED

- Radiated Emissions

6 TEST EQUIPMENT

1 Conducted Emissions FCC
Conducted Emissions AC Mains for FCC standards

Ref.No.	Device Name	Description	Manufacturer	Serial Number	Last Calibration	Calibration Due
1.1	MFS	Rubidium Frequency Normal MFS	Datum GmbH	002	2020-11	2021-11
1.2	Opus10 TPR (8253.00)	T/P Logger 13	Lufft Mess- und Regeltechnik GmbH	13936	2019-05	2021-05
1.3	ESH3-Z5	Two-Line V-Network (AUX)	Rohde & Schwarz GmbH & Co. KG	828304/029	2019-06	2021-06
1.4	EP 1200/B, NA/B1	AC Source, Amplifier with integrated variable Oscillator	Spitzenberger & Spies GmbH & Co. KG	B6278		
1.5	Chroma 6404	AC Source	Chroma ATE INC.	64040001304		
1.6	Shielded Room 02	Shielded Room 4m x 3m	Frankonia Germany EMC Solution GmbH	-		
1.7	ESH3-Z5	Two-Line V-Network (EUT)	Rohde & Schwarz GmbH & Co. KG	829996/002	2019-06	2021-06
1.8	ESR 7	EMI Receiver / Spectrum Analyzer	Rohde & Schwarz	101424	2019-01	2021-01
1.9	Opus10 THI (8152.00)	T/H Logger 02	Lufft Mess- und Regeltechnik GmbH	7489	2019-05	2021-05

2 Radiated Emissions
Lab to perform radiated emission tests

Ref.No.	Device Name	Description	Manufacturer	Serial Number	Last Calibration	Calibration Due
2.1	MFS	Rubidium Frequency Normal MFS	Datum GmbH	002	2020-11	2021-11
2.2	N5000/NP	Filter for EUT, 2 Lines, 250 V, 16 A	ETS-LINDGREN	241515		
2.3	Opus10 TPR (8253.00)	T/P Logger 13	Lufft Mess- und Regeltechnik GmbH	13936	2019-05	2021-05
2.4	ESW44	EMI Receiver / Spectrum Analyzer	Rohde & Schwarz GmbH & Co. KG	101603	2019-12	2021-12
2.5	Anechoic Chamber 01	SAC/FAR, 10.58 m x 6.38 m x 6.00 m	Frankonia	none	2018-06	2021-06
2.6	HL 562 ULTRALOG	Biconical-log-per antenna (30 MHz - 3 GHz) with HL 562E biconicals	Rohde & Schwarz GmbH & Co. KG	830547/003	2018-07	2021-07
2.7	AMF-7D00101800-30-10P-R	Broadband Amplifier 100 MHz - 18 GHz	Miteq			
2.8	5HC2700/12750-1.5-KK	High Pass Filter	Trilithic	9942012		

Ref.No.	Device Name	Description	Manufacturer	Serial Number	Last Calibration	Calibration Due
2.9	ASP 1.2/1.8-10 kg	Antenna Mast	Maturo GmbH	-		
2.10	Anechoic Chamber 03	FAR, 8.80m x 4.60m x 4.05m (l x w x h)	Albatross Projects	P26971-647-001-PRB		
2.11	Fluke 177	Digital Multimeter 03 (Multimeter)	Fluke Europe B.V.	86670383	2020-04	2022-04
2.12	Opus10 THI (8152.00)	T/H Logger 10	Lufft Mess- und Regeltechnik GmbH	12488	2019-06	2021-06
2.13	NRVD	Power Meter	Rohde & Schwarz GmbH & Co. KG	828110/016	2020-08	2021-08
2.14	HF 906	Double-ridged horn	Rohde & Schwarz	357357/002	2018-09	2021-09
2.15	JS4-18002600-32-5P	Broadband Amplifier 18 GHz - 26 GHz	Miteq	849785		
2.16	FSW 43	Spectrum Analyzer	Rohde & Schwarz	103779	2019-02	2021-02
2.17	EP 1200/B, NA/B1	AC Source, Amplifier with integrated variable Oscillator	Spitzenberger & Spies GmbH & Co. KG	B6278		
2.18	3160-09	Standard Gain / Pyramidal Horn Antenna 26.5 GHz	EMCO Elektronic GmbH	00083069		
2.19	WHKX 7.0/18G-8SS	High Pass Filter	Wainwright Instruments GmbH	09		
2.20	DS 420S	Turn Table 2 m diameter	HD GmbH	420/573/99		
2.21	4HC1600/12750-1.5-KK	High Pass Filter	Trilithic	9942011		
2.22	SMB100A	Signal Generator 100 kHz - 40 GHz	Rohde & Schwarz Vertriebs-GmbH	181486	2019-11	2021-11
2.23	JS4-00102600-42-5A	Broadband Amplifier 30 MHz - 26 GHz	Miteq	619368		
2.24	TT 1.5 WI	Turn Table	Maturo GmbH	-		
2.25	HL 562 ULTRALOG	Biconical-log-per Antenna (30 MHz - 3 GHz)	Rohde & Schwarz GmbH & Co. KG	100609	2019-05	2022-05
2.26	HF 906	Double-ridged horn	Rohde & Schwarz	357357/001	2018-03	2021-03
2.27	3160-10	Standard Gain / Pyramidal Horn Antenna 40 GHz	EMCO Elektronic GmbH	00086675		
2.28	MA4985-XP-ET	Bore Sight Antenna Mast	innco systems GmbH	none		
2.29	VLFX-650+	Low Pass Filter DC650 MHz	Mini-Circuits	15542		
2.30	JUN-AIR Mod. 6-15	Air Compressor	JUN-AIR Deutschland GmbH	612582		
2.31	5HC3500/18000-1.2-KK	High Pass Filter	Trilithic	200035008		

Ref.No.	Device Name	Description	Manufacturer	Serial Number	Last Calibration	Calibration Due
2.32	HFH2-Z2	Loop Antenna	Rohde & Schwarz GmbH & Co. KG	829324/006	2018-01	2021-01
2.33	ESR 7	EMI Receiver / Spectrum Analyzer	Rohde & Schwarz	101424	2019-01	2021-01
2.34	SB4-100.OLD20-3T/10 Airwin 2 x 1.5 kW	Air compressor (oil-free)	airWin Kompressoren UG	901/00503		
2.35	JS4-00101800-35-5P	Broadband Amplifier 30 MHz - 18 GHz	Miteq	896037		
2.36	AS 620 P	Antenna Mast (pneumatic polarisation)	HD GmbH	620/37		
2.37	TD1.5-10kg	EUT Tilt Device (Rohacell)	Maturo GmbH	TD1.5-10kg/024/3790709		
2.38	Innco Systems CO3000	Controller for bore sight mast SAC	innco systems GmbH	CO3000/967/39371016/L		
2.39	NRV-Z1	Sensor Head B	Rohde & Schwarz GmbH & Co. KG	827753/006	2020-08	2021-08
2.40	HF 907-2	Double-ridged horn	Rohde & Schwarz	102817	2019-04	2022-04
2.41	PAS 2.5 - 10 kg	Antenna Mast	Maturo GmbH	-		
2.42	AFS42-00101800-25-S-42	Broadband Amplifier 25 MHz - 18 GHz	Miteq	2035324		
2.43	AM 4.0	Antenna Mast 4 m	Maturo GmbH	AM4.0/180/11920513		
2.44	HF 907	Double-ridged horn	Rohde & Schwarz	102444	2018-07	2021-07

The calibration interval is the time interval between “Last Calibration” and “Calibration Due”

7 ANTENNA FACTORS, CABLE LOSS AND SAMPLE CALCULATIONS

This chapter contains the antenna factors with their corresponding path loss of the used measurement path for all antennas as well as the insertion loss of the LISN.

7.1 LISN R&S ESH3-Z5 (150 KHZ – 30 MHZ)

Frequency		Corr.	LISN insertion loss ESH3-Z5	cable loss (incl. 10 dB atten-uator)
MHz		dB	dB	dB
0.15		10.1	0.1	10.0
5		10.3	0.1	10.2
7		10.5	0.2	10.3
10		10.5	0.2	10.3
12		10.7	0.3	10.4
14		10.7	0.3	10.4
16		10.8	0.4	10.4
18		10.9	0.4	10.5
20		10.9	0.4	10.5
22		11.1	0.5	10.6
24		11.1	0.5	10.6
26		11.2	0.5	10.7
28		11.2	0.5	10.7
30		11.3	0.5	10.8

Sample calculation

U_{LISN} (dB µV) = U (dB µV) + Corr. (dB)
U = Receiver reading
LISN Insertion loss = Voltage Division Factor of LISN
Corr. = sum of single correction factors of used LISN, cables, switch units (if used)
Linear interpolation will be used for frequencies in between the values in the table.

7.2 ANTENNA R&S HFH2-Z2 (9 KHZ – 30 MHZ)

Frequency	AF HFH-Z2)	Corr.	cable loss 1 (inside chamber)	cable loss 2 (outside chamber)	cable loss 3 (switch unit)	cable loss 4 (to receiver)	distance corr. (-40 dB/ decade)	d_{Limit} (meas. distance (limit)	d_{used} (meas. distance (used)
MHz	dB (1/m)	dB	dB	dB	dB	dB	dB	m	m
0.009	20.50	-79.6	0.1	0.1	0.1	0.1	-80	300	3
0.01	20.45	-79.6	0.1	0.1	0.1	0.1	-80	300	3
0.015	20.37	-79.6	0.1	0.1	0.1	0.1	-80	300	3
0.02	20.36	-79.6	0.1	0.1	0.1	0.1	-80	300	3
0.025	20.38	-79.6	0.1	0.1	0.1	0.1	-80	300	3
0.03	20.32	-79.6	0.1	0.1	0.1	0.1	-80	300	3
0.05	20.35	-79.6	0.1	0.1	0.1	0.1	-80	300	3
0.08	20.30	-79.6	0.1	0.1	0.1	0.1	-80	300	3
0.1	20.20	-79.6	0.1	0.1	0.1	0.1	-80	300	3
0.2	20.17	-79.6	0.1	0.1	0.1	0.1	-80	300	3
0.3	20.14	-79.6	0.1	0.1	0.1	0.1	-80	300	3
0.49	20.12	-79.6	0.1	0.1	0.1	0.1	-80	300	3
0.490001	20.12	-39.6	0.1	0.1	0.1	0.1	-40	30	3
0.5	20.11	-39.6	0.1	0.1	0.1	0.1	-40	30	3
0.8	20.10	-39.6	0.1	0.1	0.1	0.1	-40	30	3
1	20.09	-39.6	0.1	0.1	0.1	0.1	-40	30	3
2	20.08	-39.6	0.1	0.1	0.1	0.1	-40	30	3
3	20.06	-39.6	0.1	0.1	0.1	0.1	-40	30	3
4	20.05	-39.5	0.2	0.1	0.1	0.1	-40	30	3
5	20.05	-39.5	0.2	0.1	0.1	0.1	-40	30	3
6	20.02	-39.5	0.2	0.1	0.1	0.1	-40	30	3
8	19.95	-39.5	0.2	0.1	0.1	0.1	-40	30	3
10	19.83	-39.4	0.2	0.1	0.2	0.1	-40	30	3
12	19.71	-39.4	0.2	0.1	0.2	0.1	-40	30	3
14	19.54	-39.4	0.2	0.1	0.2	0.1	-40	30	3
16	19.53	-39.3	0.3	0.1	0.2	0.1	-40	30	3
18	19.50	-39.3	0.3	0.1	0.2	0.1	-40	30	3
20	19.57	-39.3	0.3	0.1	0.2	0.1	-40	30	3
22	19.61	-39.3	0.3	0.1	0.2	0.1	-40	30	3
24	19.61	-39.3	0.3	0.1	0.2	0.1	-40	30	3
26	19.54	-39.3	0.3	0.1	0.2	0.1	-40	30	3
28	19.46	-39.2	0.3	0.1	0.3	0.1	-40	30	3
30	19.73	-39.1	0.4	0.1	0.3	0.1	-40	30	3

Sample calculation

E (dB µV/m) = U (dB µV) + AF (dB 1/m) + Corr. (dB)
U = Receiver reading
AF = Antenna factor
Corr. = sum of single correction factors of used cables, switch unit, distance correction, amplifier (if applicable)
distance correction = -40 * LOG (d_{Limit}/ d_{used})
Linear interpolation will be used for frequencies in between the values in the table.
Table shows an extract of values

7.3 ANTENNA R&S HL562 (30 MHZ – 1 GHZ)

(d_{Limit} = 3 m)

Frequency	AF R&S HL562	Corr.	cable loss 1 (inside chamber)	cable loss 2 (outside chamber)	cable loss 3 (switch unit)	cable loss 4 (to receiver)	distance corr. (-20 dB/ decade)	d_{Limit} (meas. distance (limit)	d_{used} (meas. distance (used)
MHz	dB (1/m)	dB	dB	dB	dB	dB	dB	m	m
30	18.6	0.6	0.29	0.04	0.23	0.02	0.0	3	3
50	6.0	0.9	0.39	0.09	0.32	0.08	0.0	3	3
100	9.7	1.2	0.56	0.14	0.47	0.08	0.0	3	3
150	7.9	1.6	0.73	0.20	0.59	0.12	0.0	3	3
200	7.6	1.9	0.84	0.21	0.70	0.11	0.0	3	3
250	9.5	2.1	0.98	0.24	0.80	0.13	0.0	3	3
300	11.0	2.3	1.04	0.26	0.89	0.15	0.0	3	3
350	12.4	2.6	1.18	0.31	0.96	0.13	0.0	3	3
400	13.6	2.9	1.28	0.35	1.03	0.19	0.0	3	3
450	14.7	3.1	1.39	0.38	1.11	0.22	0.0	3	3
500	15.6	3.2	1.44	0.39	1.20	0.19	0.0	3	3
550	16.3	3.5	1.55	0.46	1.24	0.23	0.0	3	3
600	17.2	3.5	1.59	0.43	1.29	0.23	0.0	3	3
650	18.1	3.6	1.67	0.34	1.35	0.22	0.0	3	3
700	18.5	3.6	1.67	0.42	1.41	0.15	0.0	3	3
750	19.1	4.1	1.87	0.54	1.46	0.25	0.0	3	3
800	19.6	4.1	1.90	0.46	1.51	0.25	0.0	3	3
850	20.1	4.4	1.99	0.60	1.56	0.27	0.0	3	3
900	20.8	4.7	2.14	0.60	1.63	0.29	0.0	3	3
950	21.1	4.8	2.22	0.60	1.66	0.33	0.0	3	3
1000	21.6	4.9	2.23	0.61	1.71	0.30	0.0	3	3

(d_{Limit} = 10 m)

30	18.6	-9.9	0.29	0.04	0.23	0.02	-10.5	10	3
50	6.0	-9.6	0.39	0.09	0.32	0.08	-10.5	10	3
100	9.7	-9.2	0.56	0.14	0.47	0.08	-10.5	10	3
150	7.9	-8.8	0.73	0.20	0.59	0.12	-10.5	10	3
200	7.6	-8.6	0.84	0.21	0.70	0.11	-10.5	10	3
250	9.5	-8.3	0.98	0.24	0.80	0.13	-10.5	10	3
300	11.0	-8.1	1.04	0.26	0.89	0.15	-10.5	10	3
350	12.4	-7.9	1.18	0.31	0.96	0.13	-10.5	10	3
400	13.6	-7.6	1.28	0.35	1.03	0.19	-10.5	10	3
450	14.7	-7.4	1.39	0.38	1.11	0.22	-10.5	10	3
500	15.6	-7.2	1.44	0.39	1.20	0.19	-10.5	10	3
550	16.3	-7.0	1.55	0.46	1.24	0.23	-10.5	10	3
600	17.2	-6.9	1.59	0.43	1.29	0.23	-10.5	10	3
650	18.1	-6.9	1.67	0.34	1.35	0.22	-10.5	10	3
700	18.5	-6.8	1.67	0.42	1.41	0.15	-10.5	10	3
750	19.1	-6.3	1.87	0.54	1.46	0.25	-10.5	10	3
800	19.6	-6.3	1.90	0.46	1.51	0.25	-10.5	10	3
850	20.1	-6.0	1.99	0.60	1.56	0.27	-10.5	10	3
900	20.8	-5.8	2.14	0.60	1.63	0.29	-10.5	10	3
950	21.1	-5.6	2.22	0.60	1.66	0.33	-10.5	10	3
1000	21.6	-5.6	2.23	0.61	1.71	0.30	-10.5	10	3

Sample calculation

E (dB µV/m) = U (dB µV) + AF (dB 1/m) + Corr. (dB)
U = Receiver reading
AF = Antenna factor
Corr. = sum of single correction factors of used cables, switch unit, distance correction, amplifier (if applicable)
distance correction = -20 * LOG (d_{Limit}/ d_{used})
Linear interpolation will be used for frequencies in between the values in the table.
Tables show an extract of values.

7.4 ANTENNA R&S HF907 (1 GHZ – 18 GHZ)

Frequency	AF R&S HF907	Corr.	cable loss 1 (relay + cable inside chamber)	cable loss 2 (outside chamber)	cable loss 3 (switch unit, atten-uator & pre-amp)	cable loss 4 (to receiver)		
MHz	dB (1/m)	dB	dB	dB	dB	dB		
1000	24.4	-19.4	0.99	0.31	-21.51	0.79		
2000	28.5	-17.4	1.44	0.44	-20.63	1.38		
3000	31.0	-16.1	1.87	0.53	-19.85	1.33		
4000	33.1	-14.7	2.41	0.67	-19.13	1.31		
5000	34.4	-13.7	2.78	0.86	-18.71	1.40		
6000	34.7	-12.7	2.74	0.90	-17.83	1.47		
7000	35.6	-11.0	2.82	0.86	-16.19	1.46		

Frequency	AF R&S HF907	Corr.	cable loss 1 (relay inside chamber)	cable loss 2 (inside chamber)	cable loss 3 (outside chamber)	cable loss 4 (switch unit, atten-uator & pre-amp)	cable loss 5 (to receiver)	used for FCC 15.247
MHz	dB (1/m)	dB	dB	dB	dB	dB	dB	
3000	31.0	-23.4	0.47	1.87	0.53	-27.58	1.33	
4000	33.1	-23.3	0.56	2.41	0.67	-28.23	1.31	
5000	34.4	-21.7	0.61	2.78	0.86	-27.35	1.40	
6000	34.7	-21.2	0.58	2.74	0.90	-26.89	1.47	
7000	35.6	-19.8	0.66	2.82	0.86	-25.58	1.46	

Frequency	AF R&S HF907	Corr.	cable loss 1 (relay inside chamber)	cable loss 2 (High Pass)	cable loss 3 (pre-amp)	cable loss 4 (inside chamber)	cable loss 5 (outside chamber)	cable loss 6 (to receiver)
MHz	dB (1/m)	dB	dB	dB	dB	dB	dB	dB
7000	35.6	-57.3	0.56	1.28	-62.72	2.66	0.94	1.46
8000	36.3	-56.3	0.69	0.71	-61.49	2.84	1.00	1.53
9000	37.1	-55.3	0.68	0.65	-60.80	3.06	1.09	1.60
10000	37.5	-56.2	0.70	0.54	-61.91	3.28	1.20	1.67
11000	37.5	-55.3	0.80	0.61	-61.40	3.43	1.27	1.70
12000	37.6	-53.7	0.84	0.42	-59.70	3.53	1.26	1.73
13000	38.2	-53.5	0.83	0.44	-59.81	3.75	1.32	1.83
14000	39.9	-56.3	0.91	0.53	-63.03	3.91	1.40	1.77
15000	40.9	-54.1	0.98	0.54	-61.05	4.02	1.44	1.83
16000	41.3	-54.1	1.23	0.49	-61.51	4.17	1.51	1.85
17000	42.8	-54.4	1.36	0.76	-62.36	4.34	1.53	2.00
18000	44.2	-54.7	1.70	0.53	-62.88	4.41	1.55	1.91

Sample calculation

E (dB µV/m) = U (dB µV) + AF (dB 1/m) + Corr. (dB)
U = Receiver reading
AF = Antenna factor
Corr. = sum of single correction factors of used cables, switch unit, distance correction, amplifier (if applicable)
Linear interpolation will be used for frequencies in between the values in the table.
Tables show an extract of values.

7.5 ANTENNA EMCO 3160-09 (18 GHZ – 26.5 GHZ)

Frequency	AF EMCO 3160-09	Corr.	cable loss 1 (inside chamber)	cable loss 2 (pre-amp)	cable loss 3 (inside chamber)	cable loss 4 (switch unit)	cable loss 5 (to receiver)
MHz	dB (1/m)	dB	dB	dB	dB	dB	dB
18000	40.2	-23.5	0.72	-35.85	6.20	2.81	2.65
18500	40.2	-23.2	0.69	-35.71	6.46	2.76	2.59
19000	40.2	-22.0	0.76	-35.44	6.69	3.15	2.79
19500	40.3	-21.3	0.74	-35.07	7.04	3.11	2.91
20000	40.3	-20.3	0.72	-34.49	7.30	3.07	3.05
20500	40.3	-19.9	0.78	-34.46	7.48	3.12	3.15
21000	40.3	-19.1	0.87	-34.07	7.61	3.20	3.33
21500	40.3	-19.1	0.90	-33.96	7.47	3.28	3.19
22000	40.3	-18.7	0.89	-33.57	7.34	3.35	3.28
22500	40.4	-19.0	0.87	-33.66	7.06	3.75	2.94
23000	40.4	-19.5	0.88	-33.75	6.92	3.77	2.70
23500	40.4	-19.3	0.90	-33.35	6.99	3.52	2.66
24000	40.4	-19.8	0.88	-33.99	6.88	3.88	2.58
24500	40.4	-19.5	0.91	-33.89	7.01	3.93	2.51
25000	40.4	-19.3	0.88	-33.00	6.72	3.96	2.14
25500	40.5	-20.4	0.89	-34.07	6.90	3.66	2.22
26000	40.5	-21.3	0.86	-35.11	7.02	3.69	2.28
26500	40.5	-21.1	0.90	-35.20	7.15	3.91	2.36

Sample calculation

E (dB µV/m) = U (dB µV) + AF (dB 1/m) + Corr. (dB)
U = Receiver reading
AF = Antenna factor
Corr. = sum of single correction factors of used cables, switch unit, distance correction, amplifier (if applicable)
Linear interpolation will be used for frequencies in between the values in the table.
Table shows an extract of values.

7.6 ANTENNA EMCO 3160-10 (26.5 GHZ – 40 GHZ)

Frequency	AF EMCO 3160-10	Corr.	cable loss 1 (inside chamber)	cable loss 2 (outside chamber)	cable loss 3 (switch unit)	cable loss 4 (to receiver)	distance corr. (-20 dB/ decade)	d_{Limit} (meas. distance (limit)	d_{used} (meas. distance (used)
GHz	dB (1/m)	dB	dB	dB	dB	dB	dB	m	m
26.5	43.4	-11.2	4.4				-9.5	3	1.0
27.0	43.4	-11.2	4.4				-9.5	3	1.0
28.0	43.4	-11.1	4.5				-9.5	3	1.0
29.0	43.5	-11.0	4.6				-9.5	3	1.0
30.0	43.5	-10.9	4.7				-9.5	3	1.0
31.0	43.5	-10.8	4.7				-9.5	3	1.0
32.0	43.5	-10.7	4.8				-9.5	3	1.0
33.0	43.6	-10.7	4.9				-9.5	3	1.0
34.0	43.6	-10.6	5.0				-9.5	3	1.0
35.0	43.6	-10.5	5.1				-9.5	3	1.0
36.0	43.6	-10.4	5.1				-9.5	3	1.0
37.0	43.7	-10.3	5.2				-9.5	3	1.0
38.0	43.7	-10.2	5.3				-9.5	3	1.0
39.0	43.7	-10.2	5.4				-9.5	3	1.0
40.0	43.8	-10.1	5.5				-9.5	3	1.0

Sample calculation

E (dB µV/m) = U (dB µV) + AF (dB 1/m) + Corr. (dB)
U = Receiver reading
AF = Antenna factor
Corr. = sum of single correction factors of used cables, switch unit, distance correction, amplifier (if applicable)
Linear interpolation will be used for frequencies in between the values in the table.
distance correction = -20 * LOG (d_{Limit}/ d_{used})
Linear interpolation will be used for frequencies in between the values in the table.
Table shows an extract of values.

8 PHOTO REPORT

Please see separate photo report.

9 MEASUREMENT UNCERTAINTIES

Test Case	Parameter	Uncertainty
AC Power Line	Power	± 3.4 dB
Field Strength of spurious radiation	Power	± 5.5 dB
6 dB / 26 dB / 99% Bandwidth	Power Frequency	± 2.9 dB ± 11.2 kHz
Conducted Output Power	Power	± 2.2 dB
Band Edge Compliance	Power Frequency	± 2.2 dB ± 11.2 kHz
Frequency Stability	Frequency	± 25 Hz
Power Spectral Density	Power	± 2.2 dB

The measurement uncertainties for all parameters are calculated with an expansion factor (coverage factor) k = 1.96. This means, that the true value is in the corresponding interval with a probability of 95 %.

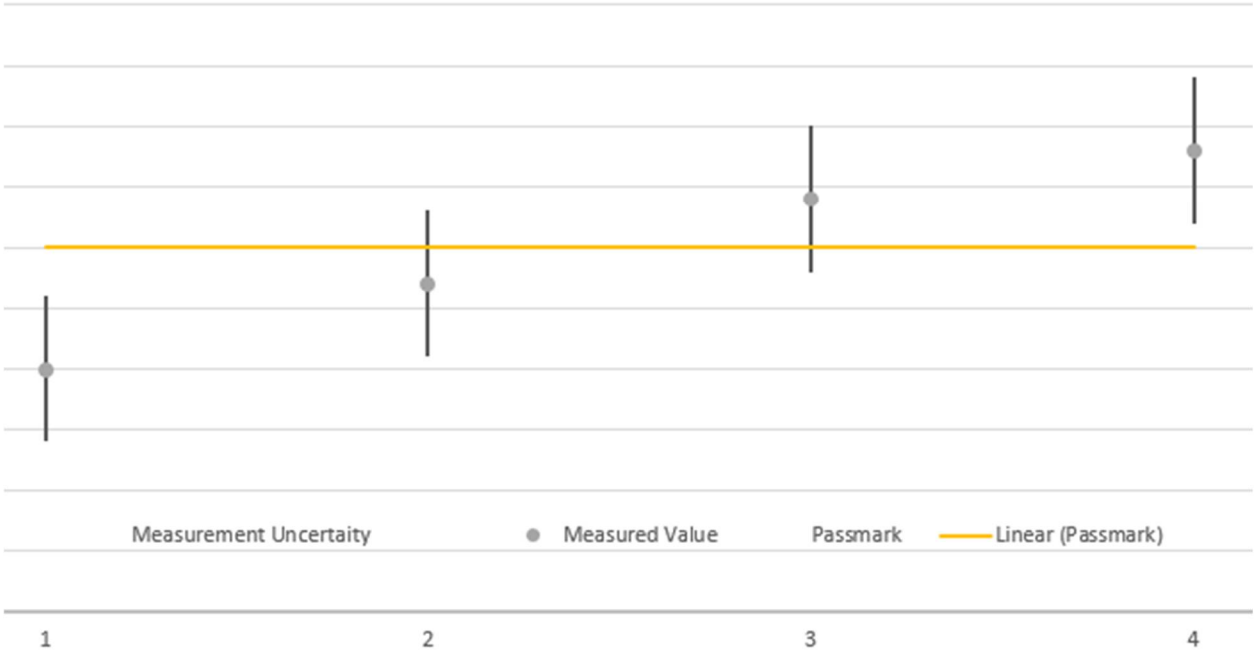

The verdicts in this test report are given according the above diagram:

Case	Measured Value	Uncertainty Range	Verdict
1	below pass mark	below pass mark	Passed
2	below pass mark	within pass mark	Passed
3	above pass mark	within pass mark	Failed
4	above pass mark	above pass mark	Failed

That means, the laboratory applies, as decision rule (see ISO/IEC 17025:2017), the so called shared risk principle.