Model: IC-CPD

Brand: Porsche

Model: IC-CPD

Sales-, or Trade name of the model IC-CPD: Porsche Mobile Charger Connect

HW-Version: 13

SW-Version: PWR-Board: SW_P: 1910

SW-Version: COM-Board: SW_C: 2911 with Power Line Communication (PLC) switched on

Applicant adress: Dr. Ing. h.c. F. Porsche Aktiengesellschaft, Porsche Platz 1,
D- 70435 Stuttgart Zuffenhausen

Product usage: IC-CPD (In Cable Control an Protection Device) Charger for BEV and PHEV, 100-240/400V, 6-40A, 1,3 kW- 22 kW

Receiver sensitivity: -80 dBm for (2,4 and 5 GHz)

Duty cycle: 30-70%

Size: Please use the information on pages 12-15 of this document.

Weight: 2,54 kg

Humidity range: 0 - 100%, 0-5000 m üNN, (IP55/enclosure 3R). The storage temperatures at the manufacturer and OEM can range from 20°C/68°F to a maximum of 105°C/221°F

year of manufacture:from 2019

SAR: < 0,1 W/m^2

Protocols Wireline and Wireless: 802.11.n (a, b, g, n, ac)

Technical Description / User Manual

for

Model: IC-CPD

eSystems Project Manager:

name:	Frank Beger
phone:	+49 7022 4003-266
fax:	+49 7022 42772
E-Mail:	frank.beger@esystems-mtg.de

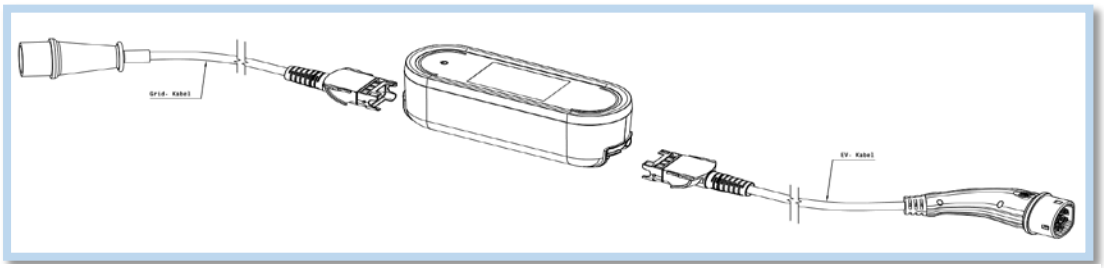

Grid-Cable Schematic Drawing IC-CPD CEV-Cable

Figure 1: overview IC-CPD (schematic)

eSystems MTG GmbH
Bahnhofstraße 100
D-73240 Wendlingen

07.08.2019

Model: IC-CPD - overview general:

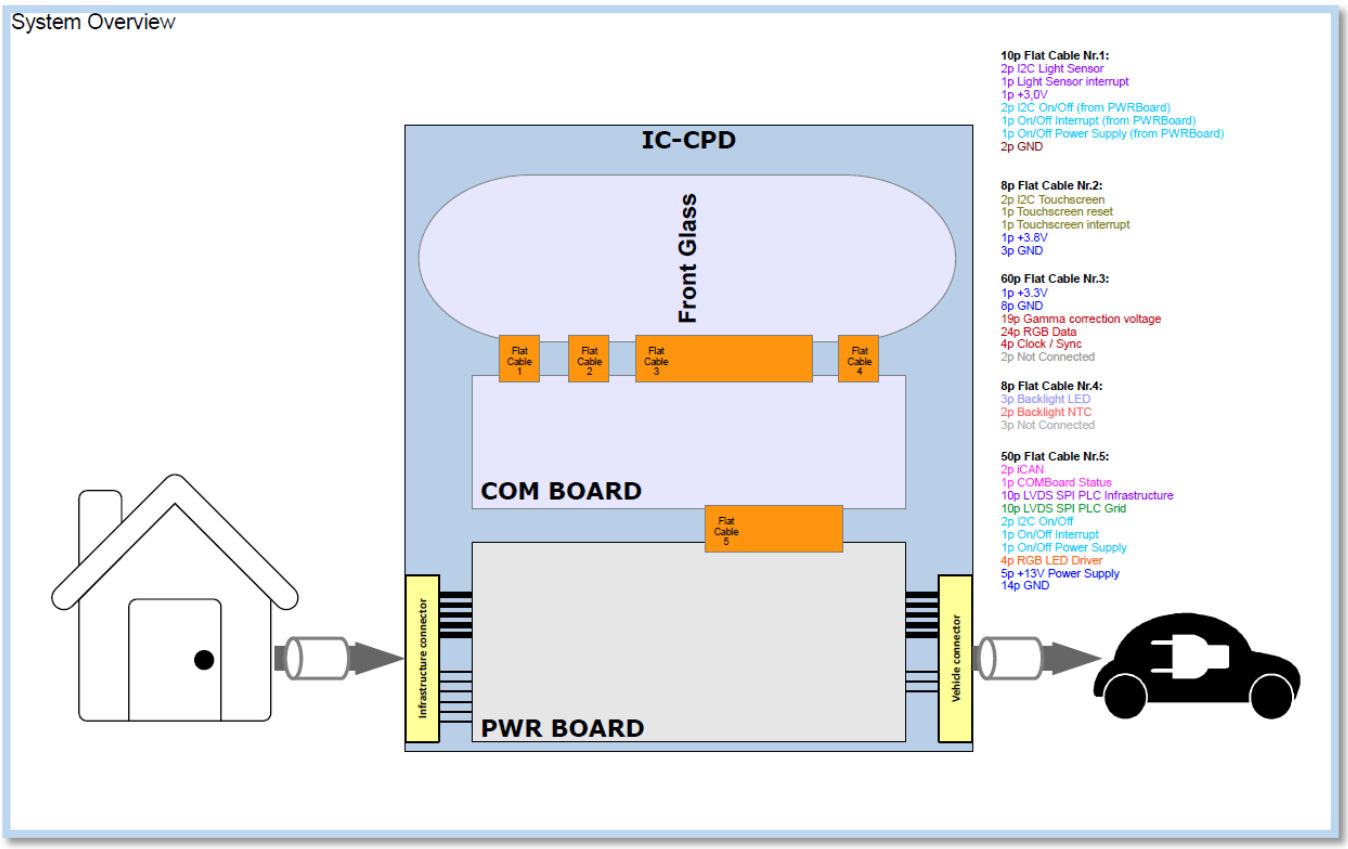

Figure 2: Overview IC-CPD general

Power:

- USA/JAPAN (9,6 kW)
- (UL) referencing Countries (9,6 kW)
- IEC/China other countries 7,2 kW, or/and 11 kW, or/and 22 kW
- IEC referencing countries 7,2 kW, or/and 11 kW, or/and 22 kW

Safety:

- AC/DC RCD
- Ground monitor
- Switched PE (not USA)
- Temperature sensor in infrastructure plug

Connection cable:

- Infrastructure side pluggable 0,3 m, 0,9m - 1,7m (Mode2)
- Vehicle side pluggable 2,5m - 7,5m (USA, ISR, CH, only 2,5m), see attachments

HMI:

- 5“ Touch Display, high resolution

Service concept:

- Diagnosis and Flash

Markets:

- Worldwide

Housing:

- Design COP-A

Brand design:

- Brand specific HMI and housing

Interfaces:

- PLC (Home Plug GreenPhy)
- WLAN

Intelligent charging functions:

- Automatic activation (alt. PIN)
- HMI Integration vehicle
- Current monitoring
- Optical fiber
- HEMS interface
- User specific charging energy recording

Accessories:

- Current sensor in house installation

I. Table of Contents

1. module specification 6
   1.1. Supply 6
   Precontroller p3V8 6
   1.2. CPU 6
   1.3. Wireless 7
   1.3.1 WLAN MURATA: LBEE6U4XQC-182 Modul 7
   1.3.2 Block diagram module 7
   1.3.3 Circuit diagram of the module 8
   1.3.4 COM_BOARD PCB with “Murata LBEE6U4XQC-182” module 8
   1.3.5 WLAN Access Point 10
   1.4. PLC (Power Line Communication) 10
2. Electrical safety 10
3. EMC- and Ground concept 10
4. Complete block diagram PWR-Board 11
   4.1. Energymeter IEC/UL/China/Japan and referencing countries 11
   General parameter 11

The IC-CPD is a ”Mode2, “In Cable Control and Protection Device”, for charging electric vehicles BEV and PHEV with integrated protection to avoid overheating and electrical hazards. It includes WLAN/PLC-communication for value added services.

A. The COM-Board is the user and communication interface for the uses to use the complete system. Access is guaranteed in different national languages, see “User Manual”.

1. module specification

1.1. Supply

Precontroller p3V8

A special PMIC PF0100Z is recommended for powering the iMX6SoloX controller. However, the maximum input voltage for PMIC is only 4.8V, so an LMR14030 switching regulator is used as a pre-controller.

1.2. CPU

The controller chosen by Freescale is i.MX6SoloX. Order number: MCIMX6X4AVM08AC.

1.3. Wireless

1.3.1 WLAN MURATA: LBEE6U4XQC-182 Modul

- 2,4 GHz, **802.11.n (a, b, g, n, ac)** (Channel 1-11)
- 5 GHz, **802.11.n (a, b, g, n, ac)** (Channel 36-48)

	802.11b	802.11g	802.11n	802.11a	802.11ac
band	2.4GHz	2.4GHz	2.4/5GHz	5GHz	5GHz
channel	1-11	1-11	1-11/36-48	36-48	36-48
suband [MHz]	2400 - 2480	2400 - 2480	2400 - 2480, subband 1 (5150 - 5250)	subband 1 (5150 - 5250)	Subband 1 (5150 - 5250
modulation	DSSS	OFDM	OFDM	OFDM	OFDM
bandwith [MHz]	20	20	20,40	20	20,40,80
max output power [dBm]	20	20	20	20	20

1.3.2 Block diagram “Murata module LBEE6U4XQC-182”

CONFIDENTIAL

Figure 4: block diagramm WLAN/WiFi- “Murata module LBEE6U4XQC-182”

1.3.3 Circuit diagram of the module

CONFIDENTIAL

Figure 5: Circuit diagram of the WLAN/WiFi module

1.3.4 COM_BOARD PCB with “Murata LBEE6U4XQC-182” module

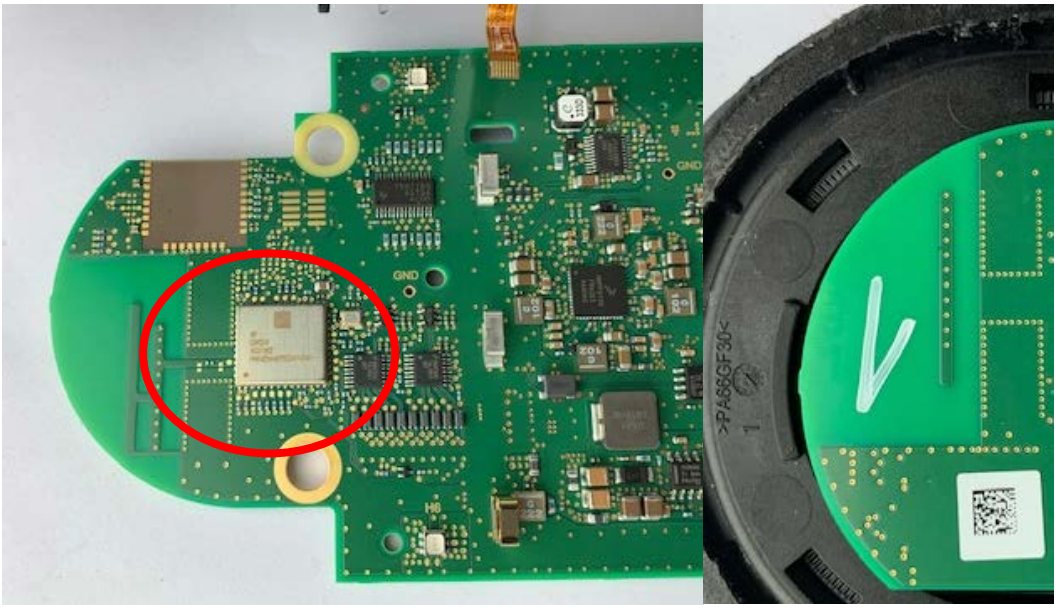

Figure 5a: Display PCB with Murata module (front-, and backside) this is the used WLAN/WiFi module

Detailed informations about the Murata module LBEE6U4XQC-182:

- **Duty cicle**: daily maximum 8 hours, 30%
- **External connectors:** non
- **Powering:** no external power supply, integrated power supply by PCB with 3,8 V
- **Radio module diagram:** not defined
- **Receiver Sensitivity:** -80 dBm for (2,4 and 5 GHz)
- **Protocol wire and wireless:** 802.11.n (a, b, g, n, ac)
- **HW13, SW_C:2900** (without PLC), **HW13, SW_C2901** (with PLC) *PLC means “Power Line Communication” (different module)
- **Antenna information:** integrated PCB antenna, see next pictures

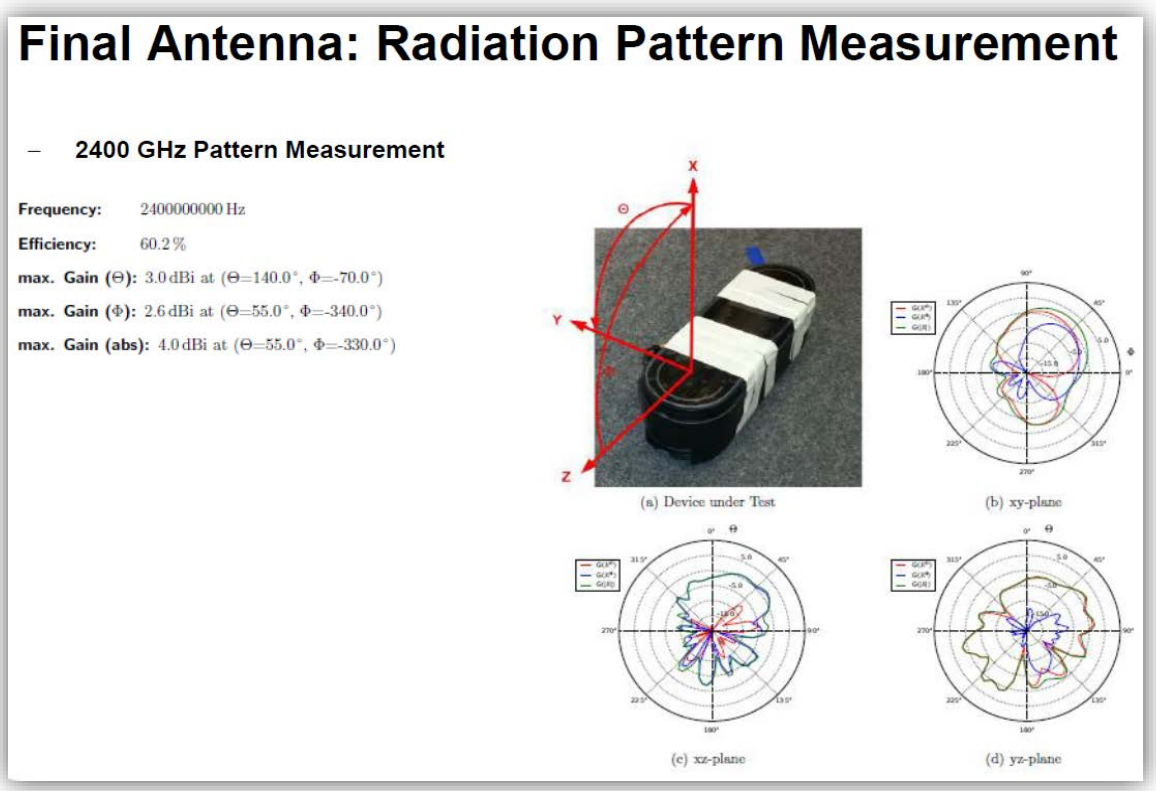

Figure 5b: Antenna WLAN/WiFi module 2,4 GHz

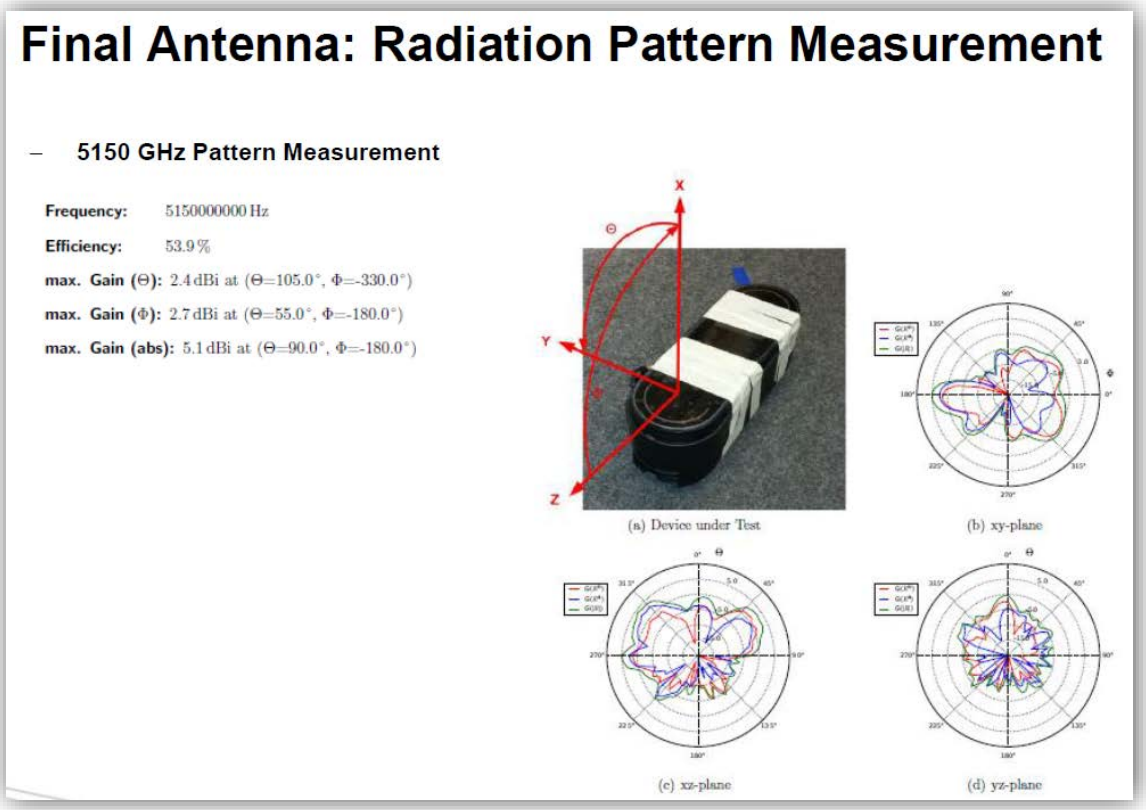

Figure 5c: Antenna WLAN/WiFi module 5 GHz

1.3.5 WLAN Access Point

- No DFS, no Radar detection.
- Access point only in 2,4GHz.

1.4. PLC (Power Line Communication)

Frequency: from 1,8 MHz to 30 MHz (fixed notching)
Standard: Home Plug Green PHY

- **Interface LVDS**

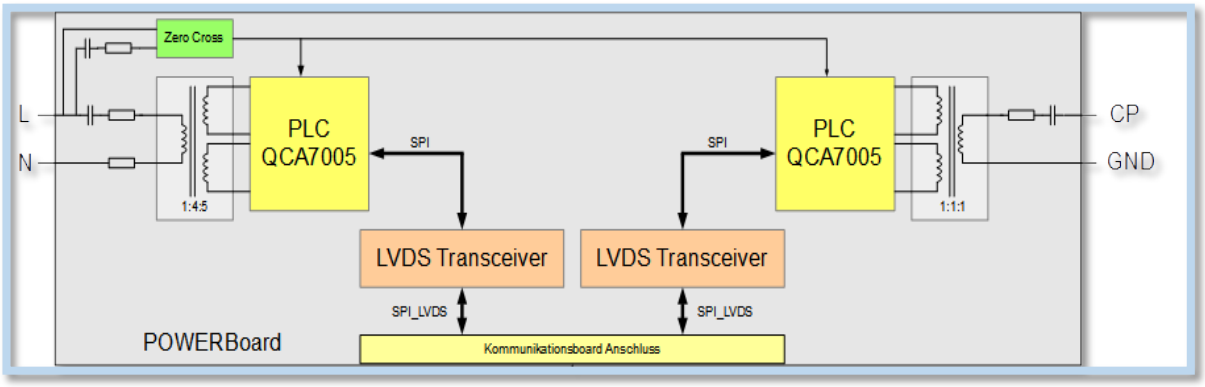

Figure 6: Architecture LVDS COM-Board

2. Electrical safety

COM board is connected only to PWR-Board and is powered by SELV/PELV voltage 13Vdc. The COM board has no outputs/inputs to the user. The charging cable itself has protection class IP55/enclosure 3R.

3. EMC- and Ground concept

UL2231, UL2594, FCC, Part 15 B, Class B, ICES-003, Class B

As well see “Low Voltage Directive” **2014/35/EU**, “EMC Directive” **2014/30/EU**, “Radio Directive” **2014/53/EU**, **EN 50561-1., ISO 15118,**

B. The Power-Board (PWR-Board) for a IC-CPD (In Cable Control and Protection Device) for Mode2 based on IEC 62752: 2016, UL2231, UL2594 and China for Mode3 based on IEC 61851 3.Ed.

4. Complete block diagram PWR-Board

CONFIDENTIAL

4.1. Energymeter IEC/UL/China/Japan and referencing countries

General parameter

Input voltage range	U_N	80VAC – 264VAC
Maximum input voltage	U_{INmax}	275VAC
Current measuring range	I_N	0A – 40A
Maximum current	I_{MAX}	52A
Maximum input voltage of STPM34	U_{IN_STPM}	300mV$_{RMS}$
Nominal temperature	T_N	+25°C
Working temperature	T_{AMB}	-30/+50°C
Temperature range for component design	T_{AMBmax}	-30/+85°C
Performance target accuracy for IN and TN		0.5%
Performance target accuracy over the entire temperature and measuring range		1.0%

I. Annex 1 (Exploded view IC-CPD)

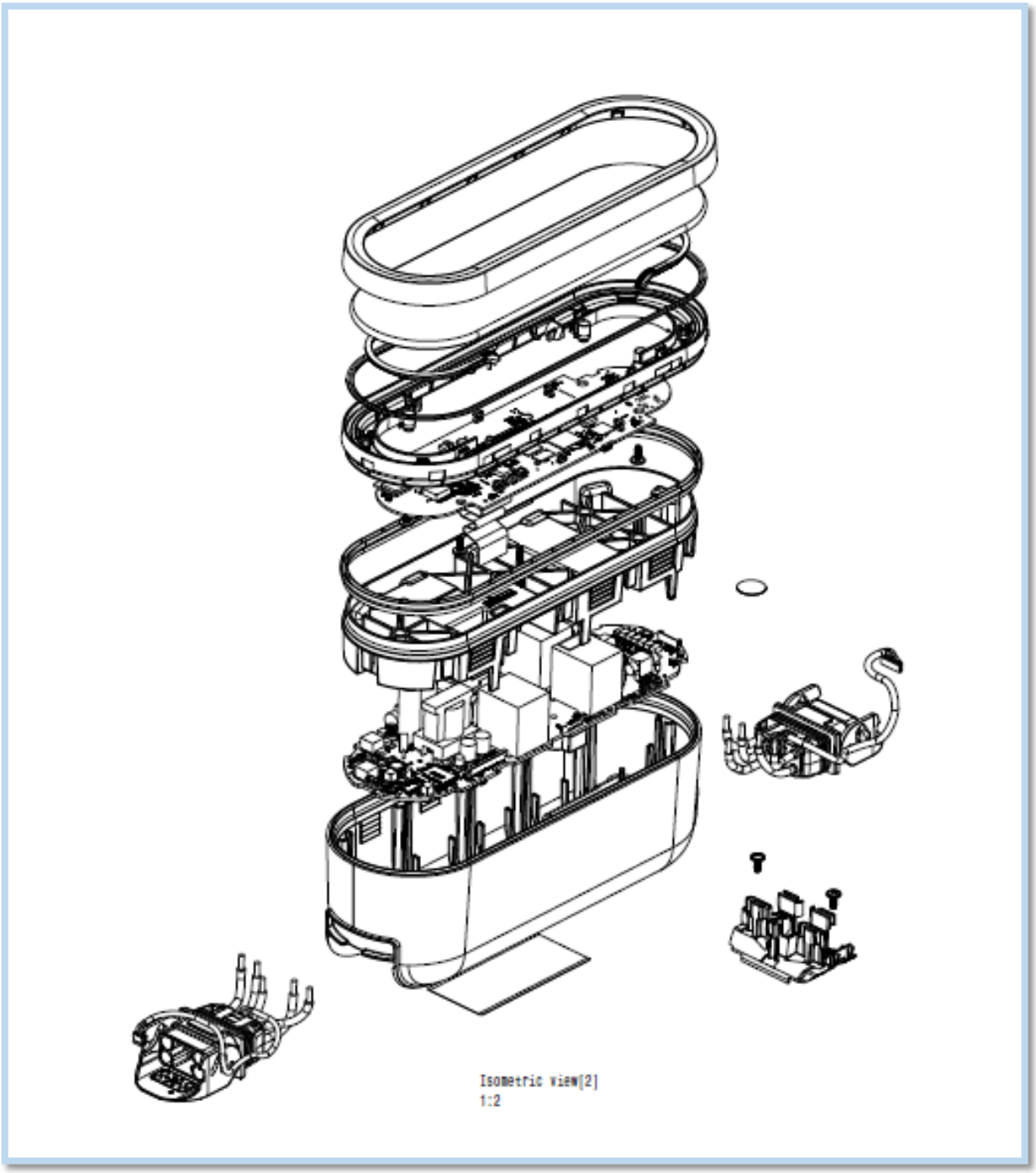

Figure 8: exploded sample: general

II. Annex 2 Overview Structure of the overall system

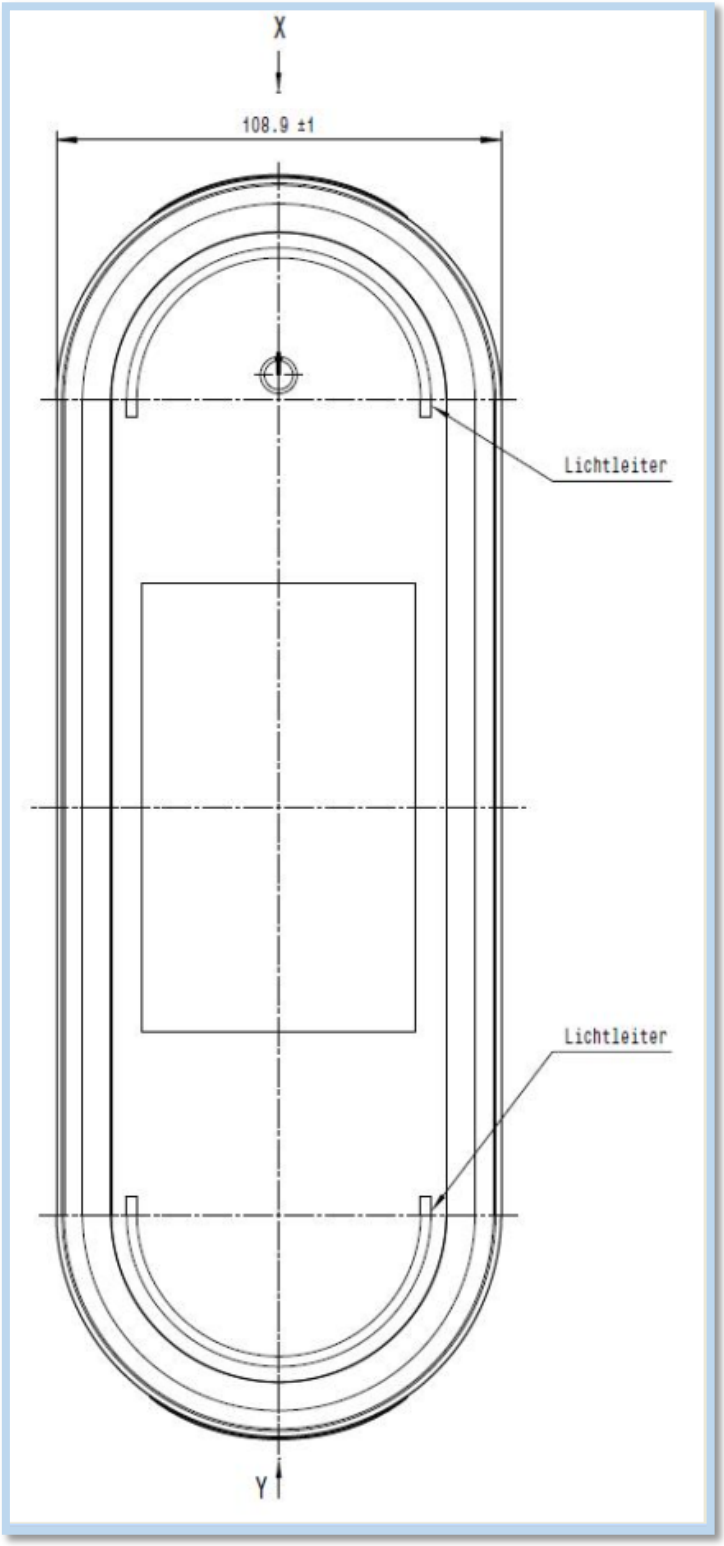

Figure 9: example: Porsche

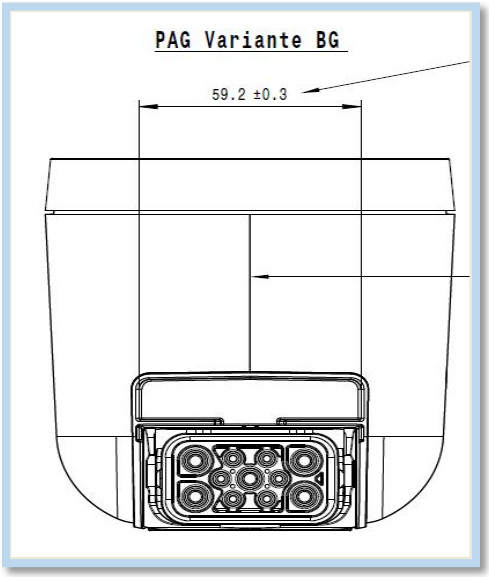

Figure 10: example: Porsche

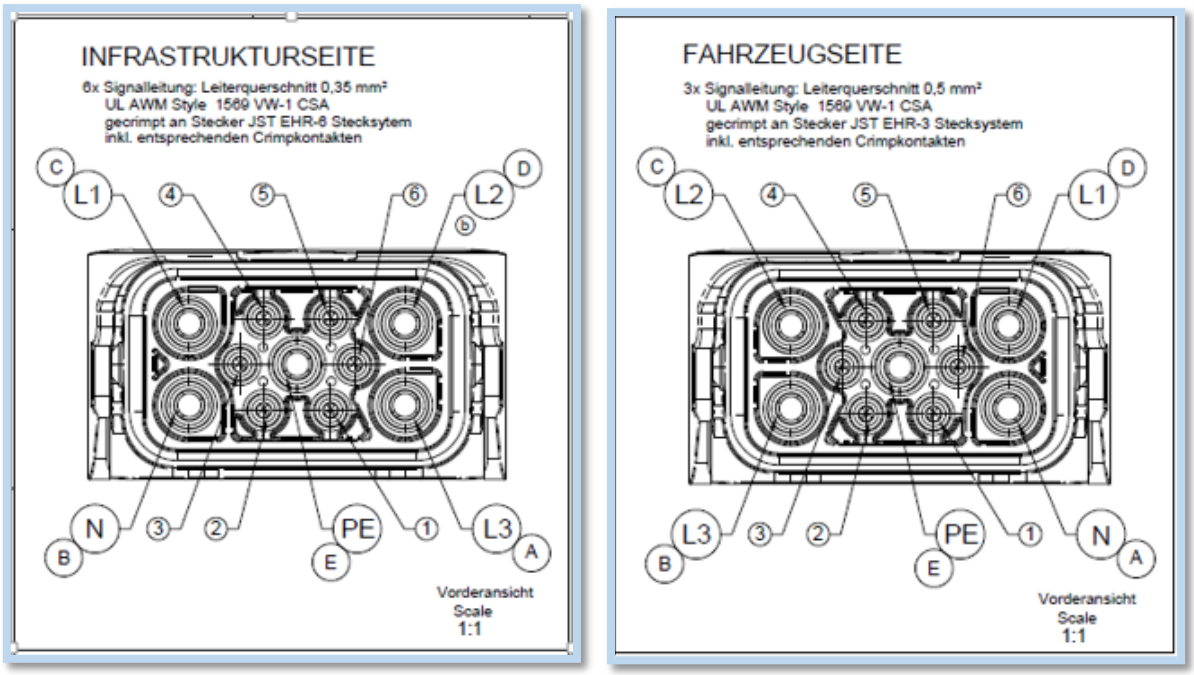

Figure 10 a + b: Contact assignment of both sides of the IC-CPD

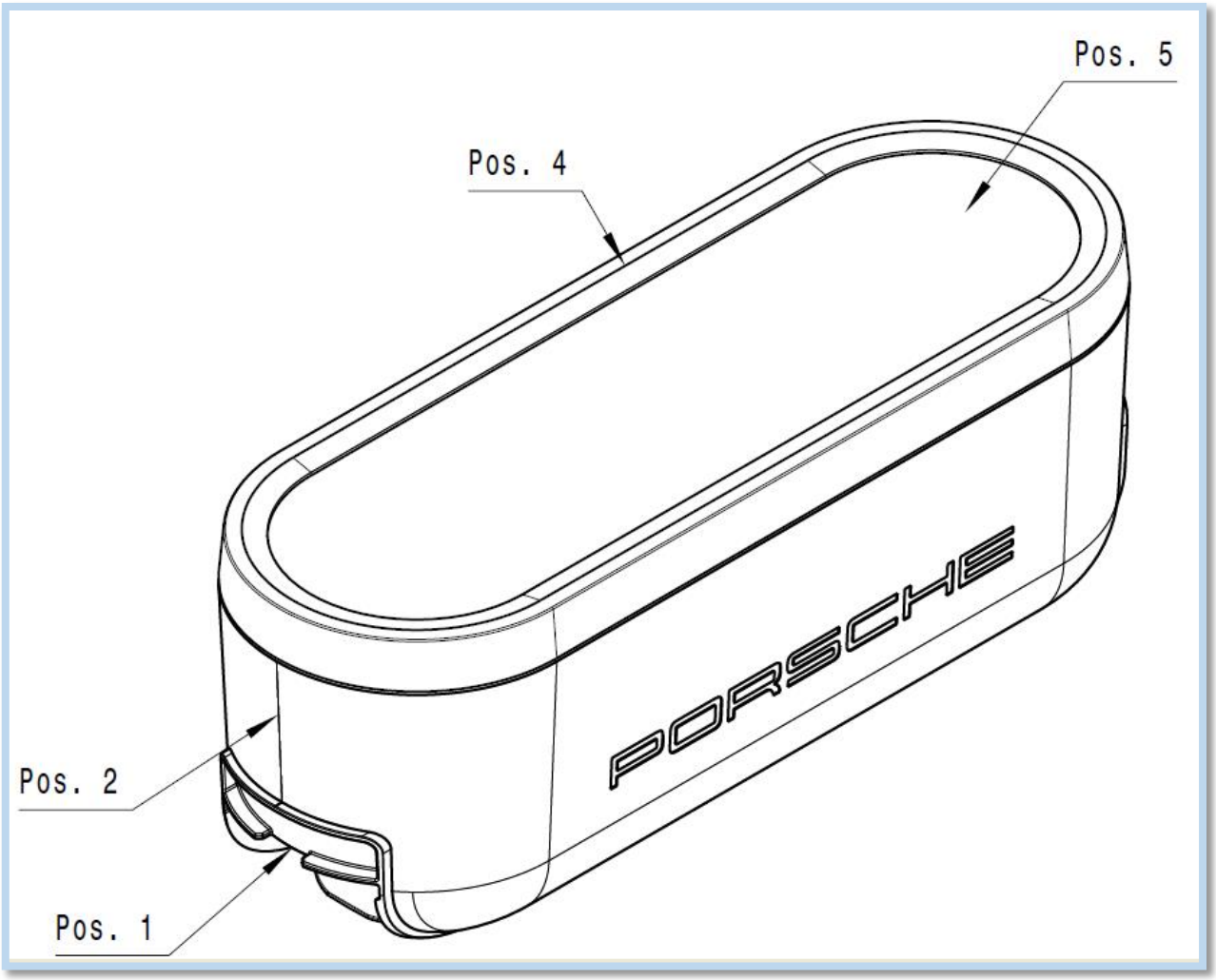

Figure 11: example: Porsche

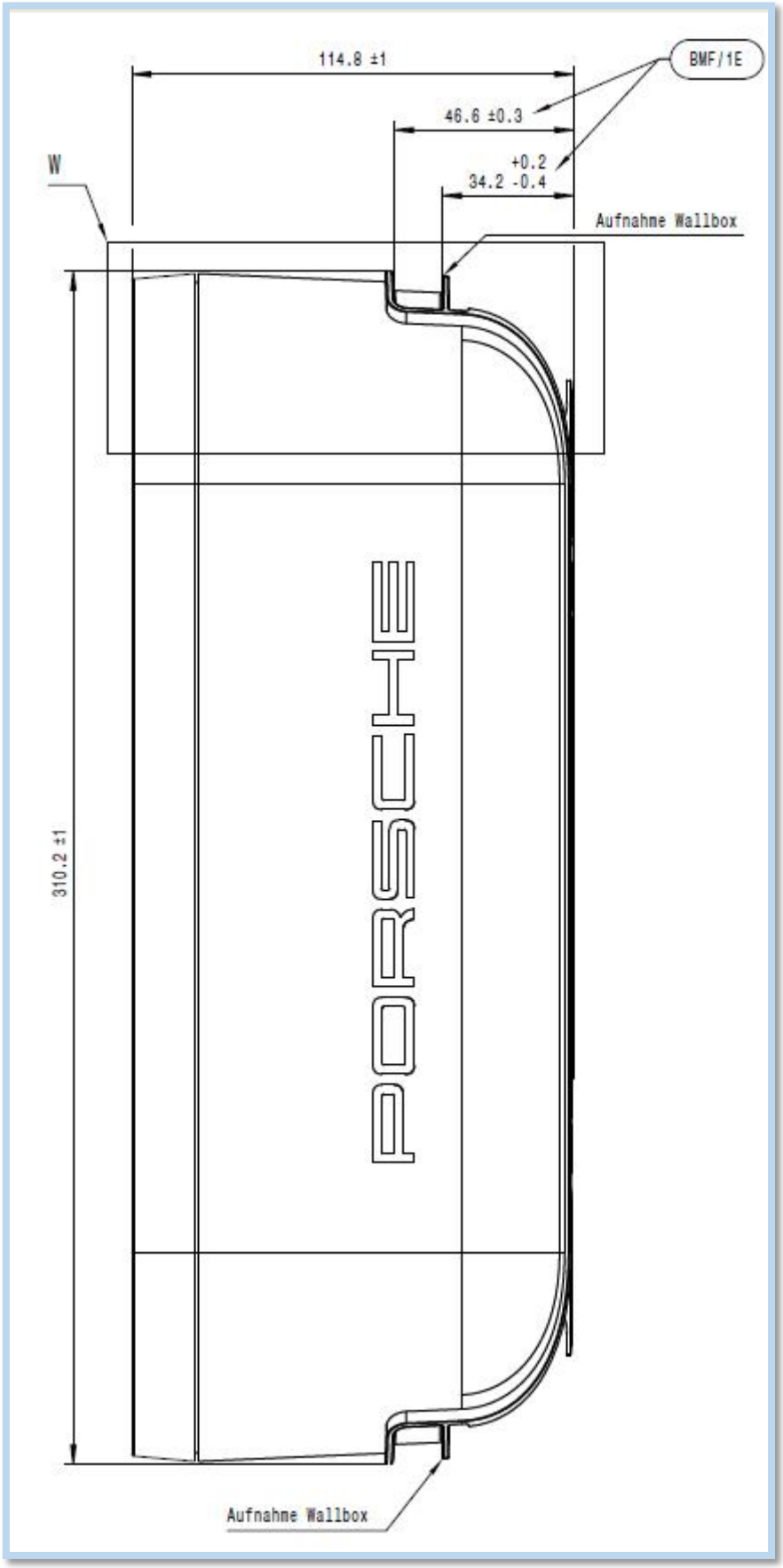

Figure 12: example: Porsche