Accordion Fold Brochure
200 gsm matt art paper, 225mm x 160mm total size

160mm

GET STARTED

1. Connect the Electron Delivery Service to the back of your Toybox to power it up.
2. Visit **www.make.toys/welcome** and follow the instructions to begin setup.
3. You're ready to start printing, have fun!

For more help and tips, please visit
www.make.toys/help

CAUTION

Please do not touch your Toybox while it is printing.

Do not touch the nozzle at the bottom of the extruder. It can be very hot, even when your Toybox is not operational.

Allow printed toys to cool for 1 minute before touching or removing.

Please use parental guidance at all times. Adult supervision is required for children under 12 years old.

Small printed toys may be a choking hazard. Keep away from curious mouths.

Keep your Toybox away from water.

Do not alter or repair your Toybox. Please contact us at **help@make.toys** with any questions.

HELLO

Model : Alpha 3D Printer

Please visit
www.make.toys/welcome
to get started

75mm 75mm 75mm

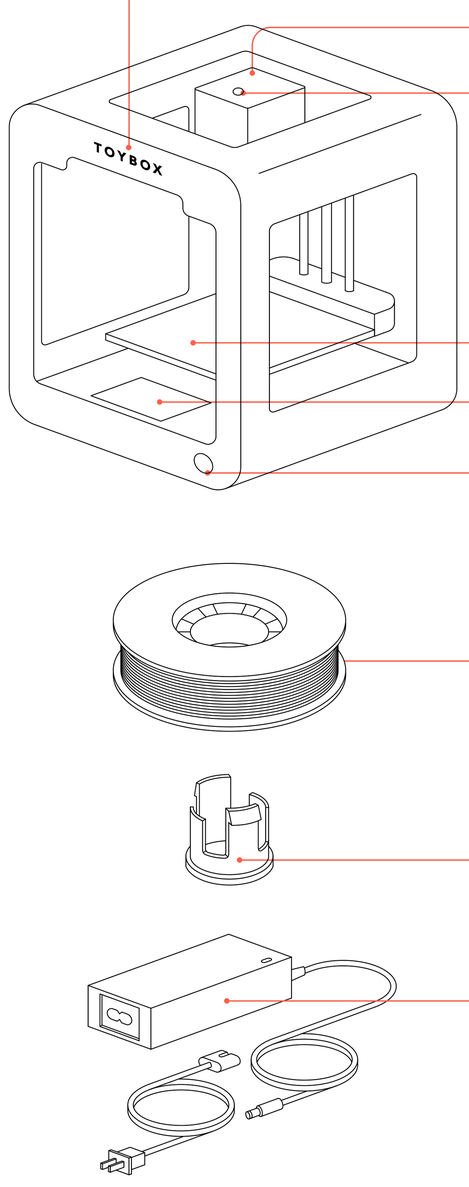

1. **TOYBOX**
   Your magical toy-making machine
2. **EXTRUDER**
   Transforms Printer Food into toys; be careful, the pointed nozzle at the bottom gets very hot
3. **MOUTH**
   Feed your Toybox by inserting Printer Food here
4. **EASY PEEL BED**
   Flexible and magnetic; makes it easy to remove your prints
5. **TOUCH SCREEN**
   Access menu options here
6. **BUTTON**
   Press to turn your Toybox on or off; press to cancel printing when your Toybox is on
7. **PRINTER FOOD**
   Biodegradable and non-toxic; feed your Toybox from the top of the extruder
8. **PRINTER FOOD HOLDER**
   Holds your printer food; attaches to the back of your Toybox
9. **ELECTRON DELIVERY SERVICE**
   Powers your Toybox; plugs into the back of your Toybox

TOYBOX

WWW.MAKE.TOYS
HELLO@MAKE.TOYS
@NEVERENDINGTOYS
@TOYBOXLABS
@REALTOYBOXLABS

— cut line
— fold line

FCC STATEMENT :

This device complies with Part 15 of the FCC Rules. Operation is subject to the following two conditions:

(1) This device may not cause harmful interference, and

(2) This device must accept any interference received, including interference that may cause undesired operation.

Warning: Changes or modifications not expressly approved by the party responsible for compliance could void the user's authority to operate the equipment.

NOTE: This equipment has been tested and found to comply with the limits for a Class B digital device, pursuant to Part 15 of the FCC Rules. These limits are designed to provide reasonable protection against harmful interference in a residential installation. This equipment generates uses and can radiate radio frequency energy and, if not installed and used in accordance with the instructions, may cause harmful interference to radio communications. However, there is no guarantee that interference will not occur in a particular installation. If this equipment does cause harmful interference to radio or television reception, which can be determined by turning the equipment off and on, the user is encouraged to try to correct the interference by one or more of the following measures:

Reorient or relocate the receiving antenna.

Increase the separation between the equipment and receiver.

Connect the equipment into an outlet on a circuit different from that to which the receiver is connected.

Consult the dealer or an experienced radio/TV technician for help.

FCC Radiation Exposure Statement:

This equipment complies with FCC radiation exposure limits set forth for an uncontrolled environment. This equipment should be installed and operated with minimum distance 20cm between the radiator & your body.