Robot vacuum cleaner Instructions Manual
BR150

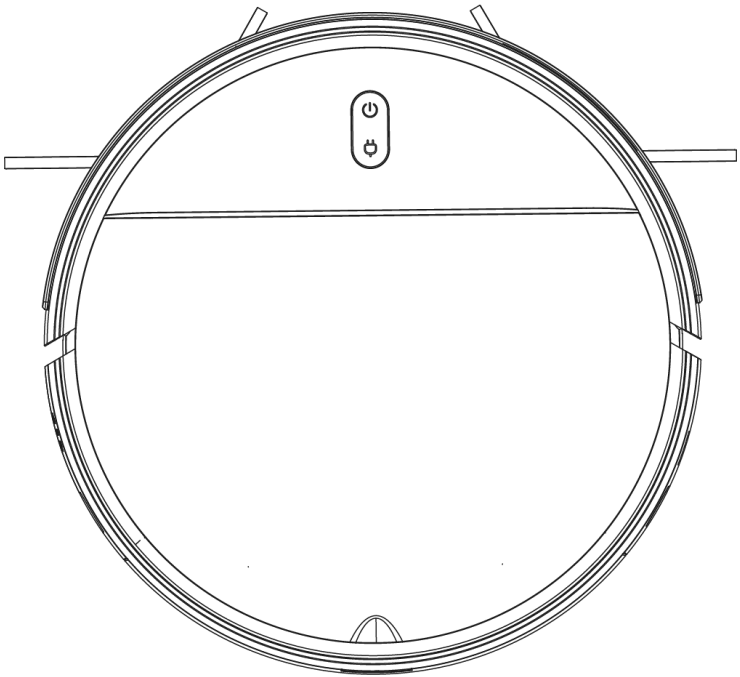

Safety Regulations

Before using this product,please read the following safety instructions and follow all routine safety precautions.
Please read the instructions carefully , please keep the instructions.
Any operation inconsistent with this instruction manual may cause damage to this product.

Note:

1. Only authorized technicians can disassemble this product. Users are not recommended to disassemble this product by themselves.
2. This product can only use the power adapter provided by the factory. If other adapters are used, the product maybe damaged.
3. Do not touch wires, sockets or body parts to roll into the product drive wheels.
4. Do not use cloth curtains or body parts to roll into the product drive wheels.
5. Do not place this product near cigarette butts, lighters and other smoldering fires.
6. Please clean the product after charging.
7. Do not bend wires excessively or place heavy objects and sharp objects on the machine.
8. This product is an indoor household product.Do not use it outdoors.
9. Do not sit on the product.
10. Do not use this product(e.g.bathroom) in wet environment.
11. Before using this product, please remove all vulnerable items(e.g.glasses,lamps,etc.) on the ground as well as items (e.g.glasses, lamps,etc.) on the ground as well as items (e.g.wires,paper sheets, curtains) that may entangle the side brushes and air suction passages.
12. Do not put this product in a place where it is easy to fall (e.g.on desks and chairs).
13. Please carefully check whether the power adapter is connected to the socket before use, otherwise the battery may be damaged.
14. To prevent tripping, please inform othermbers of the house when this product works.
15. Please empty the dust box before using this product when the dust box is full.
16. The temperature used for this product is 0 to 40 degress celsius.
17. Do not use this product in high temperature environment.
18. Please remove the battery from the machine before the product isscrapped.
19. Please make sure that this product is not powered on when removing the battery.
20. Please recycle the discarded batteries safely.

Warning:

1. Use only the original rechargeable battrey and charging seat specially equipped by the manufacturer. Non - rechargeable batteries are structly prohibited, please refer to “product parameters” for battery specification information.
2. It is forbidden to use products in environments with open flames or fragile objects.
3. It is forbidden to use products in extremely hot (above 40℃) or extremely cold (below 0℃).
4. It is forbidden for human hair,clothes,fingers and other parts to approach the opening and operating parts of the product.
5. It is fobidden to use products on wet or stagnant ground
6. It is forbidden for products to absorb any articles such as stones and waste paper that may clog products.
7. It is forbidden for products to absorb any inflammable substances, such as petrol, toner and toner for printers or photocopies. Prohibit the use of products in clean areas with flammable items.
8. It is forbidden for products to absorb any burning articles, such as cigarettes, matches, ashes and other articles that may cause fire.
9. It is forbidden to place articles at the suction opening. Do not use the product when the suction port is blocked. Clean up dust, cotton wool,hair, etc. at the suction opening to ensure smooth air circulation at the suction opening.
10. Use the power cord carefully to avoid damage. It is forbidden to use the power cord to drag or pull the product and the product charging seat. It is forbidden to use the power cord as a handle. It is forbidden to clamp the power cord in the crack of the door. It is forbidden to pull the power cord at sharp corners and corners. It is forbidden for the product to run on the power cord while the power cord should be far away from the heat source.
11. Do not use damaged charging seat.Even if the product has been severely damaged, burning of the product is prohibited, which may lead to explosion of the battery of the product.Use only with the original adapter and battery, WARNING: For the purposes of recharging the battery, only use the detachable supply unit (model: GQ12-190060-AG or DBS012A-1900600G) provided with this appliance.

12.This appliance can be used by children aged from 8 years and above and persons with reduced physical, sensory or mental capabilities or lack of experience and knowledge if they have been given supervision or instruction concerning use of the appliance in a safe way and understand the hazards involved. Children shall not play with the appliance. Cleaning and user maintenance shall not be made by children without supervision；
The adapter must be removed from the socket-outlet before cleaning or maintaining the appliance. This appliance contains batteries that are only replaceable by skilled persons.

About the use of the remote control！

1、This appliance contains batteries that are only replaceable by skilled persons.
2、The remote control uses two 1.5V of carbon zinc-manganese dry batteries.
3、Dry battery removal method: Remove the back cover of the remote control and take out the dry battery (note: children should not use dry battery as a toy)
4、Non-rechargeable batteries are not to be recharged
5、Different types of batteries or new and used batteries are not to be mixed
6、batteries are to be inserted with the correct polarity
7、exhausted batteries are to be removed from the appliance and safely disposed
8、if the appliance is to be stored unused for a long period, the batteries are removed
9、the supply terminals are not to be short-circuited.

Table of Contents

Table of Contents 3
Product Composition / Package Contents 4
Product Composition/Parts 5
Preparations 7
Using the Product - Charging the Main Unit 8
Using the Product - Starting Cleaning 9
Using the Product - Pause, Wake-up and Shutdown 10
Parts Maintenance – Dust Box 11
Parts Maintenance – Charging Electrode, Lower Visual Sensor, Driving Wheel and Universal Wheel 14
Troubleshooting 15
Product Specifications 16
Security Information 19

Product Composition / Package Contents

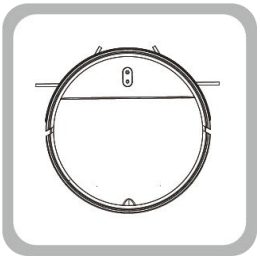

Robot

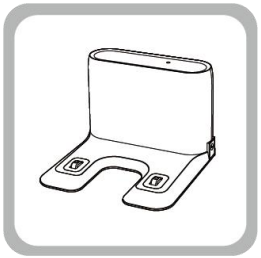

Charging Dock

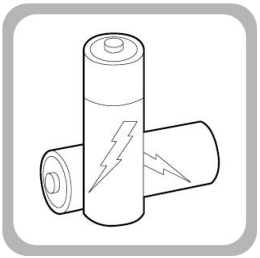

Bettery X2

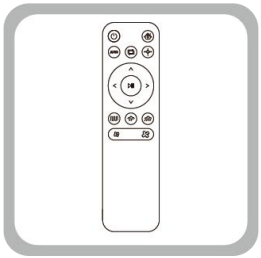

Romote Control

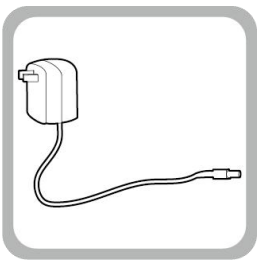

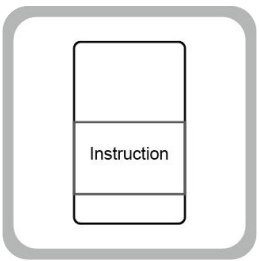

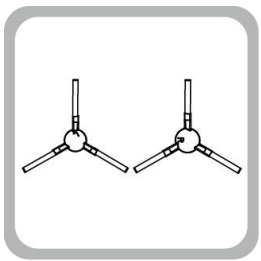

Adapter Cleaning Brush Instruction Manual Side Brush

Product Composition/Parts

Front of the main unit

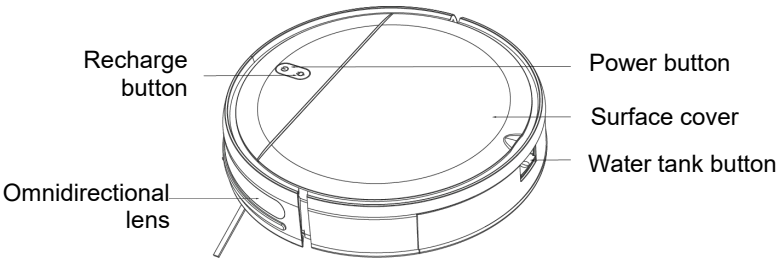

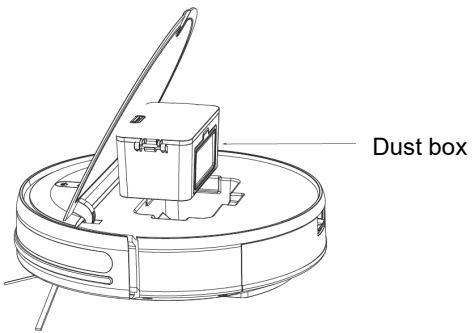

Rear of the main unit

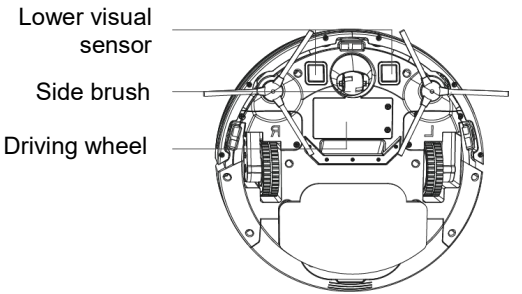

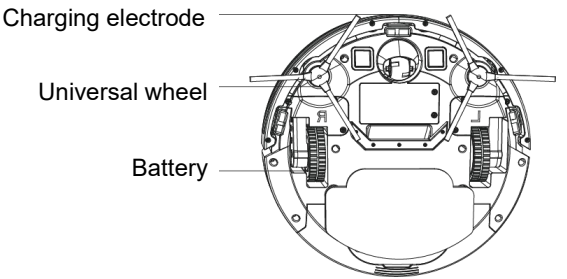

Dust box

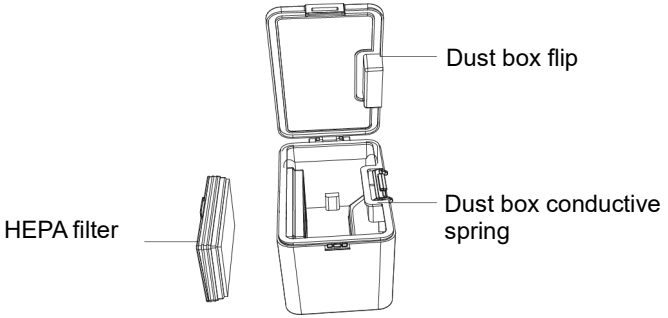

Charging pile

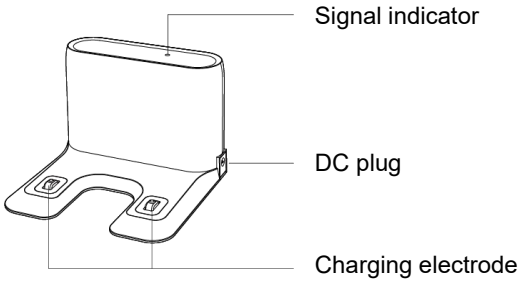

Remote control

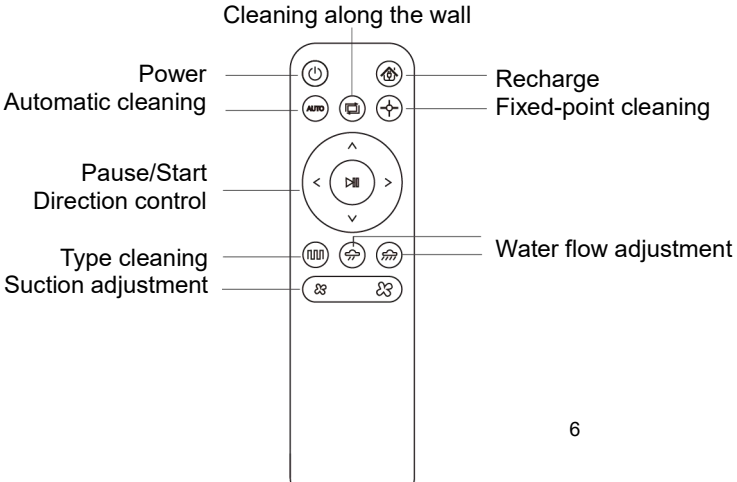

Preparations

Removing protective strips

Before using the cleaner, remove protective strips from the cleaner.

Removing protective strips

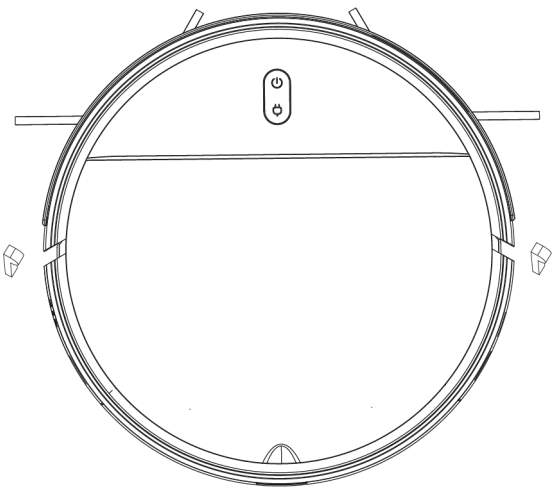

Removing protective strips

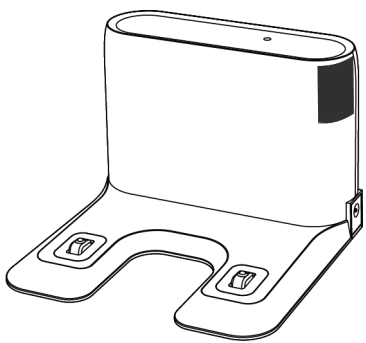

Using the Product - Charging the Main Unit

1. Place the charging stand on the flat ground against the wall. Do not place any articles 0.5 m on the left and right of the charging stand or 1.5 m in front of the charging stand.

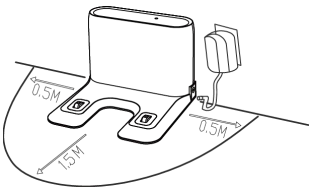

2. Connect the charging stand to the power supply.
3. Install the left and right side brushes.

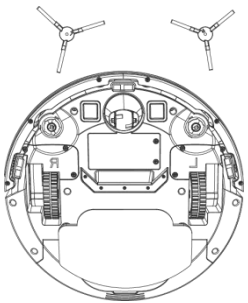

4. Charging: Place the main unit on the charging stand to charge the main unit. During charging, the indicator blinks. When charging is complete, the indicator is steady on. It takes about five hours to fully charge the main unit.

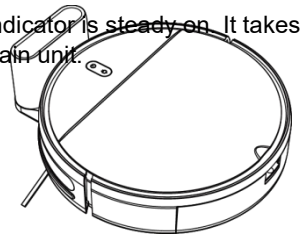

During cleaning, the main unit automatically checks its power level. If the power is insufficient, the main unit activates the mode of returning to the charging stand and automatically returns to the charging stand for charging.
Alternatively, you can press the button on the remote control to instruct the main unit to activate the mode of returning to the charging stand.

Caution:

1. Do not use the charging stand in reflective environments such as the environment exposed to direct sunlight and environment with mirrors nearby. If there are reflective objects, cover the charging stand at a height of 7 cm from the bottom.
2. To ensure the normal working duration of the main unit, fully charge the main unit before use. The charging time is about five hours.

3. To ensure the safety of charging and prevent a damp cloth from damaging the floor, remove the water tank before charging the main unit.

Using the Product - Starting Cleaning

For different cleaning requirements, this product provides multiple cleaning modes for you to choose. You can use different cleaning modes through the main unit or remote control.

Automatic Cleaning

Setting method: In the power-off state, press and hold the power button. After the indicator of the main unit is on, indicating that the main unit is powered on, press the power button again.

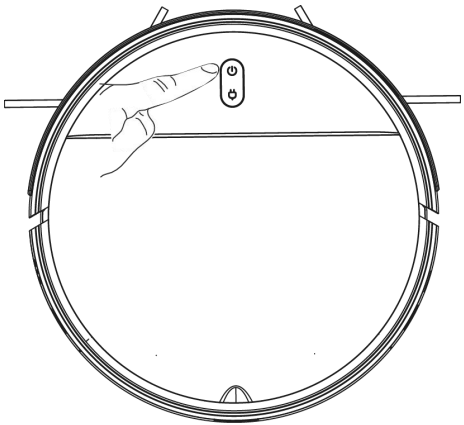

Fixed-point Cleaning

Applicable scenario: The cleaning mode is applicable to the ground environment where rubbish is concentrated. The main unit cleans the ground in a spiral path in the specified area and returns to the original point after cleaning.
Setting method: Press the key on the remote control to enable fixed-point cleaning.

Cleaning Along the Edge

Applicable scenario: The cleaning mode is applicable to indoor corners. The main unit cleans the ground along edges of fixed objects (for example, wall) and returns to the charging standard after cleaning.
Setting method: Press the key on the remote control to enable cleaning along the edge.

Manual Control

Applicable scenario: Manual control is applicable to cleaning under manual control.
Setting method: Press the key on the remote control to control the product in moving forward, moving backward, or making a turn.

Using the Product - Pause, Wake-up and Shutdown

Pause: When the main unit is working, press the power button on the main unit or press the pause key on the remote control to suspend the main unit.
Wake-up: After the main unit is suspended for more than 10 minutes, the main unit activates the sleep mode (the indicator of the main unit is off). Press the power button on the main unit to wake up the main unit and press the power key on the remote control to restart the main unit.
Power-off: After the main unit is suspended, press and hold the power button on the main unit. If indicator of the main unit is off, the product is powered off.

* After the main unit completes operation, you are advised not to shut down the main unit. Keep the main unit in the charging status so that it can work better in the next operation.

Parts Maintenance – Dust Box

A. Press the button on the dust box to remove the dust box.

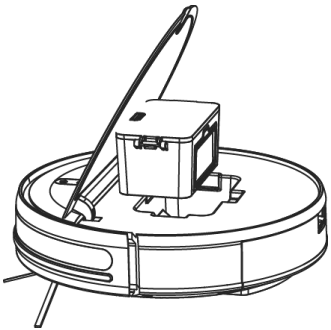

B. Open the side cover of the dust box.

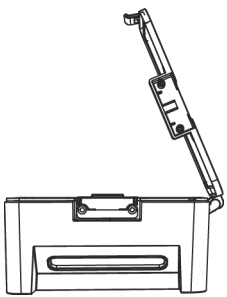

C. Dump rubbish.

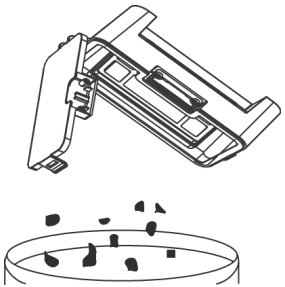

D. Take out the HEPA filter.

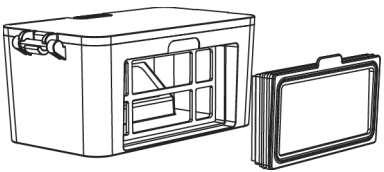

E. Tap the HEPA filter to remove dust.

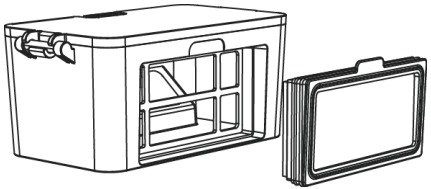

F. Wash the HEPA filter.

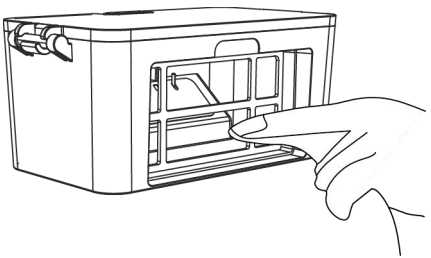

G. Clean the dust box with a cloth.

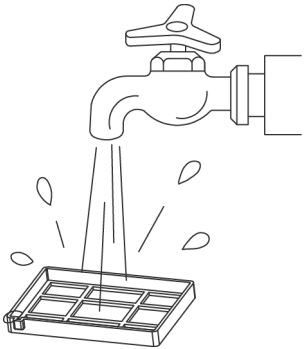

H. Dry the dust box and filter component to guarantee their service life.
Note: It is recommended that you wash the HEPA filter every 15 to 30 days. The maximum service life of the HEPA filter is three months.

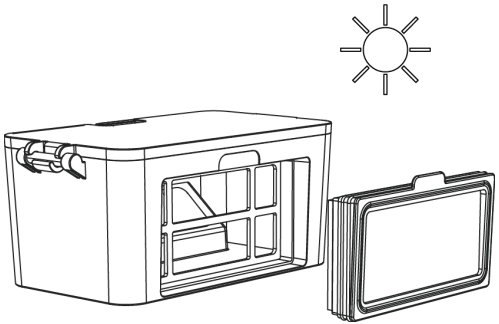

I. Put the HEPA filter back into the dust box.
Note: 1. Before installing the HEPA filter, ensure that the HEPA filter is dry.
2. Do not expose the HEPA filter to the sunlight.
J. Close the cover of the dust box and install the dust box on the main unit.

Parts Maintenance – Charging Electrode, Lower Visual Sensor, Driving Wheel and Universal Wheel

Note: The charging electrode, lower visual sensor and bumper contain sensitive electronic components. Use a dry cloth to clean the parts. Do not use a wet cloth in case water enters the parts and causes damage

Cleaning the charging electrode

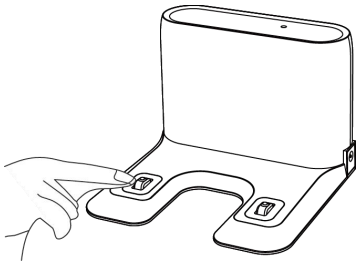

Cleaning the lower visual sensor

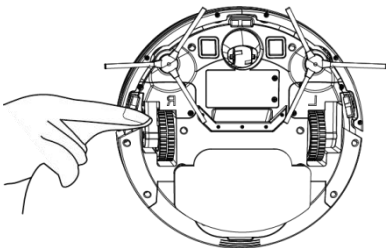

Cleaning the driving wheel and universal wheel

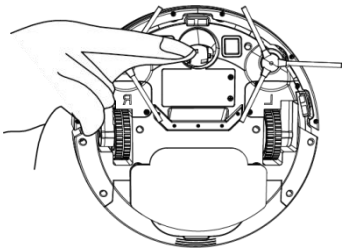

* If you do not use the product for a long time, fully charge the product and then power off the product before you store the product. Charge the product every three months in case of over-discharge of the battery.
* If the battery is over-discharged or is not used for a long time, the product may not be rechargeable. Contact after-sales service personnel of the company for maintenance. Do not disassemble the product.

Troubleshooting

No.	Prompt Tone	Fault Cause	Solution
1	The machine is off the ground.	The main unit is suspended.	Put the main unit back on the ground and press the cleaning key again.
2	The dust box is not installed.	The dust box is taken out and is not installed.	Put the dust box back into the product and press the cleaning key again.
3	The battery fails.	An error occurs during battery charging.	Contact after-sales service personnel to test the battery.
4	Please check whether the wheels are stuck.	The wheels are stuck.	Check whether the wheels are entangled with other objects and clear the objects.
5	Please check whether the front bumper bracket is stuck.	The front bumper bracket is stuck.	Check whether the front bumper bracket can rebound properly.
6	The battery level is low. Please charge.	The battery level is lower than 20%.	The machine automatically activates the recharge mode.
7	Please check whether the side brushes are entangled or stuck.	The side brushes are abnormal.	Check whether the side brushes are entangled with other objects and clear the objects.
8	Please move the machine to an open area.	The machine fails to get out of the trap.	Please move the main unit to an open place and press the cleaning key again.

Product Specifications

Category	Item	Specification
	Diameter	300 mm
Structure	Height	74 mm
	Net weight	2.5 kg
Battery	Voltage	14.4 V
	Battery	2500 mAh rechargeable lithium battery
Cleaning parameters	Dust box capacity	200 ml
	Charging type	Auto charging and manual charging
	Cleaning mode	Auto cleaning; Spot cleaning; Edge cleaning
	Charging time	About 300 minutes
	Cleaning time	About 100 minutes
Main unit	Rated power (W)	28
	Operating voltage (V)	14.4

* Due to the continuous improvement of the product, the product specifications are subject to the actual product. Our company reserves the right to update the product.

(EU)2019/1782 for Adapter <GQ12-190060-AG>

Information published	Value and precision	Unit	Notes
Manufacturer's name or trade mark, commercial registration number and address	Dongguan City GangQi electronics co., ltd.	-	-
Model identifier	GQ12-190060-AG	-	-
Input voltage	100-240	V	Specified by the manufacturer. Shall be a value or a range.
Input AC frequency	50/60	Hz	Specified by the manufacturer. Shall be a value or a range.
Output voltage	19	V	Nameplate output voltage. Shall indicate whether is AC or DC. In cases where more than one physical output or more than one output voltage at load condition 1 are measured, the sets of available Output voltage — Output current – Output power shall be published.
Output current	0.6	A	Nameplate output current. In cases where more than one physical output or more than one output voltage at load condition 1 are measured, the sets of available Output voltage — Output current – Output power shall be published.
Output power	11.4	W	Nameplate output power. In cases where more than one physical output or more than one output voltage at load condition 1 are measured, the sets of available Output voltage — Output current – Output power shall be published.
Average active efficiency	84.42%	%	Declared by the manufacturer based on the value calculated as arithmetical mean of efficiency at load conditions 1-4. In cases where multiple average active efficiencies are declared for multiple output voltages available at load condition 1, the value published shall be the average active efficiency declared for the lowest output voltage.
Efficiency at low load (10 %)	78.08%	%	Declared by the manufacturer based on the value calculated at load condition 5. External power supplies with a nameplate output power of 10 W or less shall be exempted from this requirement. In cases where multiple average active efficiencies are declared for multiple output voltages available at load condition 1, the value published shall be the value declared for the lowest output voltage.
No-load power consumption	0.084	W	Declared by the manufacturer based on the value measured for load condition 6.

(EU)2019/1782 for Adapter <DBS012A-190060G>

Information published	Value and precision	Unit	Notes
Manufacturer's name or trade mark, commercial registration number and address	Debom Technology Co., LTD. No. 502, Building 6, 8 Dongzhou Road, ChashanTown, DONGGUAN CITY Guangdong Province 523000, China	-	-
Model identifier	DBS012A-1900600G	-	-
Input voltage	100-240	V	Specified by the manufacturer. Shall be a value or a range.
Input AC frequency	50/60	Hz	Specified by the manufacturer. Shall be a value or a range.
Output voltage	19	V	Nameplate output voltage. Shall indicate whether is AC or DC. In cases where more than one physical output or more than one output voltage at load condition 1 are measured, the sets of available Output voltage — Output current – Output power shall be published.
Output current	0.6	A	Nameplate output current. In cases where more than one physical output or more than one output voltage at load condition 1 are measured, the sets of available Output voltage — Output current – Output power shall be published.
Output power	11.4	W	Nameplate output power. In cases where more than one physical output or more than one output voltage at load condition 1 are measured, the sets of available Output voltage — Output current – Output power shall be published.
Average active efficiency	84.83%	%	Declared by the manufacturer based on the value calculated as arithmetical mean of efficiency at load conditions 1-4. In cases where multiple average active efficiencies are declared for multiple output voltages available at load condition 1, the value published shall be the average active efficiency declared for the lowest output voltage.
Efficiency at low load (10 %)	78.83%	%	Declared by the manufacturer based on the value calculated at load condition 5. External power supplies with a nameplate output power of 10 W or less shall be exempted from this requirement. In cases where multiple average active efficiencies are declared for multiple output voltages available at load condition 1, the value published shall be the value declared for the lowest output voltage.
No-load power consumption	0.072W	W	Declared by the manufacturer based on the value measured for load condition 6.

Security Information

Component Type	Hazardous Substance					
	Lead (Pb) and its compounds	Mercury (Hg) and its compounds	Cadmium (Cd) and its compounds	Hexavalent chromium (Cr(VI)) and its compounds	Polybrominated biphenyls (PBB)	Polybrominateddiphenylether (PBDE)
Plastic parts	○	○	○	○	○	○
Metal parts	○	○	○	○	○	○
Circuit module of the main unit	X	○	○	○	○	○
Electronic component	○	○	○	○	○	○
Battery	○	○	○	○	○	○
Power cord (Metal part)	○	○	○	○	○	○

○: It means that the content of the hazardous substance in all homogeneous materials of the part is below the limit requirement specified in the currently valid edition of GB/T 26572.

X: It means that the content of the hazardous substance in at least one of the homogeneous materials of the component exceeds the limit requirement specified in the currently valid edition of GB/T 26572. The content of the hazardous substance in the component is in the RoHS exemption list, and meet the environmental protection requirements of the EU 2015/863 RoHS Directive.

Standard compliance: IEC/EN 60335-1:2019 IEC/EN 60335-2-2:2013 FCC Part 15B
EN 50014-1:2017 EN 50014-2:2015; EN 61000-3-2:2019 EN 61000-3-3:2013

Warnings about battery

You must not remove (or attempt to remove) the battery incorporated in this product on your own. To replace the battery, you must contact your service provider or an independent qualified professional. These instructions have been prepared for the exclusive use of your service
provider or independent qualified professional.
FOR YOUR OWN SAFETY, DO NOT ATTEMPT TO REMOVE THE BATTERY ON YOUR OWN OR DISPOSE OF IT IN FIRE. DO NOT DISASSEMBLE,
Warning
CRUSH OR PUNCTURE THE BATTERY

Correct disposal of batteries in this product

(Applicable in countries with separate battery return systems.)

The marking on the battery, manual or packaging indicates that the battery in this product should not be disposed of with other household waste. Where marked, the chemical symbols Hg, Cd or Pb indicate that the battery contains mercury, cadmium or lead above the reference levels in EC Directive 2006/66.
The battery incorporated in this product is not user replaceable. For information on its replacement, please contact your service provider. Do not attempt to remove the battery or dispose it in a fire. Do not disassemble, crush, or puncture the battery. If you intend to discard the product, the waste collection site will take the appropriate measures for the recycling and treatment of the product, including the battery

IM Download
Please download the IM through our website: http://www.freedynamics.com

* Due to the continuous improvement of the product, this information product is subject to the physical object, and our company reserves the right to update the product.

FCC STATEMENT :

This device complies with Part 15 of the FCC Rules. Operation is subject to the following two conditions:
(1) This device may not cause harmful interference, and
(2) This device must accept any interference received, including interference that may cause undesired operation.
Warning: Changes or modifications not expressly approved by the party responsible for compliance could void the user's authority to operate the equipment.

NOTE: This equipment has been tested and found to comply with the limits for a Class B digital device, pursuant to Part 15 of the FCC Rules. These limits are designed to provide reasonable protection against harmful interference in a residential installation.
This equipment generates uses and can radiate radio frequency energy and, if not installed and used in accordance with the instructions, may cause harmful interference to radio communications. However, there is no guarantee that interference will not occur in a particular installation. If this equipment does cause harmful interference to radio or television reception, which can be determined by turning the equipment off and on, the user is encouraged to try to correct the interference by one or more of the following measures:

Reorient or relocate the receiving antenna.

Increase the separation between the equipment and receiver.

Connect the equipment into an outlet on a circuit different from that to which the receiver is connected.

Consult the dealer or an experienced radio/TV technician for help.

FCC Radiation Exposure Statement

This equipment complies with FCC radiation exposure limits set forth for an uncontrolled environment. This equipment should be installed and operated with minimum distance 20cm between the radiator & your body