Robot Vacuum Cleaner Instructions Manual
R550

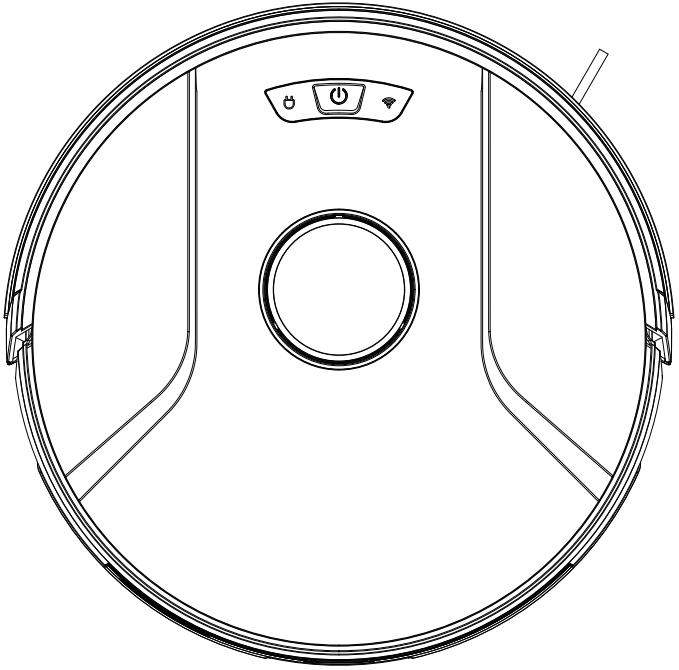

Safety Instructions

Before using this product, read the following safety instructions and follow all conventional safety precautions.
Read this manual carefully, and keep it properly.
Any operation not conforming to this manual may cause damage to this product.

Caution

1. Only authorized technicians can disassemble this product. Users are not recommended to disassemble this product by themselves.
2. Use only the power adapter provided by the manufacturer for this product. Use of other adapters may cause damage to this product.
3. Do not touch wires, sockets, or power adapter when your hands are wet.
4. Do not roll the curtain or body parts into the product drive wheel.
5. Keep this product away from cigarettes, lighters and other open flames.
6. Clean the product after charging.
7. Do not bend the wire excessively, or place heavy objects and sharp objects over the machine.
8. This product is intended for indoor use. Do not use it outdoors.
9. Do not sit on the product.
10. Do not use this product in a humid environment, such as the bathroom.
11. Before using this product, remove all vulnerable items (such as glasses and lamps) on the ground, as well as articles that may entangle the edge brush and suction channel (such as wires, paper, and curtains).
12. Do not place the product in a place where it is easy to fall off (such as tables and chairs).
13. Check carefully that the power adapter is connected with the socket before use; otherwise the battery may be damaged.
14. To prevent tripping over the product, inform other members of the house when the product is working.
15. When the dust box is full, empty the dust box before using this product.
16. The operating temperature of this product is 0°C to 40°C.
17. Do not use this product in a high temperature environment.
18. Remove the battery from the product before scrapping it.
19. When removing the battery, make sure that the product is disconnected from the power supply.
20. Properly recycle the waste batteries.

Warnings

1. Use only the original rechargeable battery and docking station provided by the manufacturer. Do not use non-rechargeable batteries. For battery specifications, see "Product Specifications".
2. Do not use the product in an environment with open flames or fragile products.
3. Do not use the product in an extremely hot (above 40°C) or extremely cold (below 0°C) environment.
4. Keep the hair, clothes, fingers and other parts of the human body away from the opening or operating parts of the product.
5. Do not use the product on wet or water-filled ground.
6. Do not use the product to vacuum any items that may block the product, such as stones and waste paper.
7. Do not use the product to vacuum any flammable materials, such as gasoline and toner used in printers or copying machines. Do not use the product in clean areas with flammable materials.
8. Do not use the product to vacuum any burning items, such as cigarettes, matches, ashes and other items that may cause fire.
9. Do not place any articles at the suction port. Do not use the product when the suction port is blocked. Remove the dust, cotton wool and hair from the suction port to ensure smooth air circulation at the suction port.
10. Handle the power cord with care to avoid damage. Do not use the power cord to drag or pull the product and its docking station, use the power cord as a handle, clamp the power cord in the door gap, or pull the power cord at sharp corners. Do not run the product over the power cord. Keep the power cord away from heat sources.
11. Even if the product is severely damaged, do not burn the product, as the product battery may explode.

The laser ranging sensor complies with IEC 60825-1:2014 class 1 laser product standard and does not produce dangerous laser radiation.

Table of Contents

Safety Instructions 1
Product and its Accessories 3
Product Composition 4
Installation 5
Description of App Icons and Buttons 8
Dust Box, Water Tank, and Mopping Cloth Assembly 10
Preparations 11
Charging the Main Unit 12
Product Use/ Start Cleaning 13
Use Instructions 14
Using the Water Tank 19
Parts Maintenance – Dust Box 20
Parts Maintenance – Water Tank and Mopping Cloth 23
Parts Maintenance – Roller Brush and Side Brush 24
Parts Maintenance – Charging electrode, anti-fall sensor, drive wheel and omnidirectional wheel 25
Troubleshooting 26
Product Specifications 30
Security Information 31

Product and its Accessories

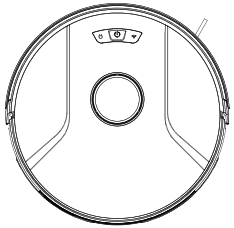

Main unit

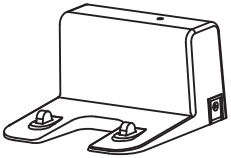

Docking station

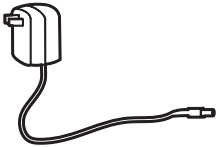

Power adapter

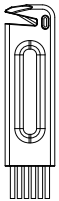

Cleaning brush

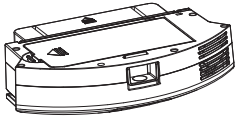

Dust box

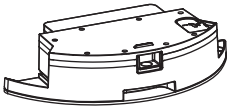

Water tank

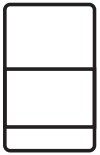

Instructions Manual

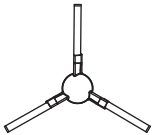

Side brush (1 sets)

Product Composition

Front view

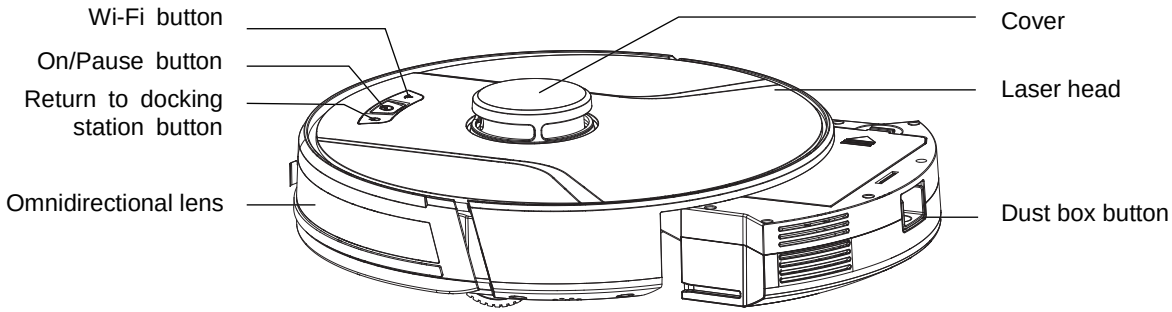

Rear view

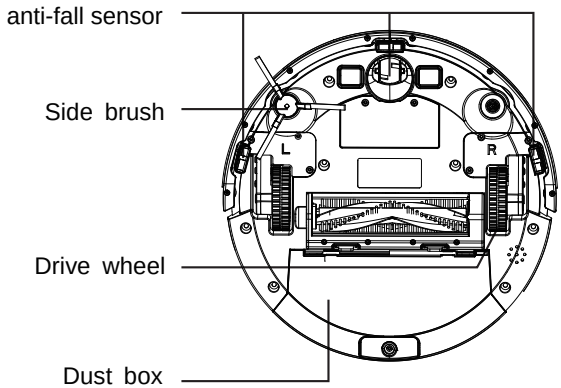

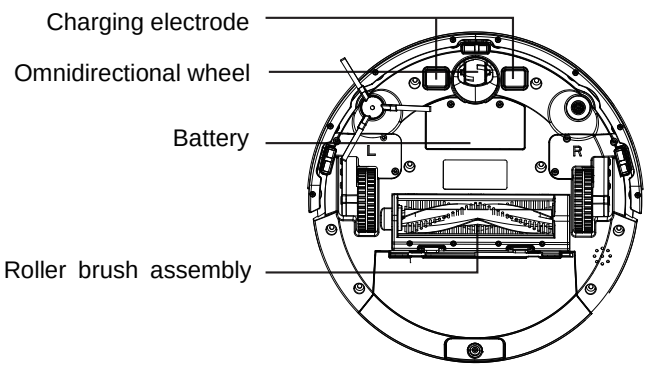

Installation

Notes

1. Before starting the vacuum cleaner, clean up wires and sundries scattered on the ground, and remove easy-to-fall, fragile, valuable and potentially dangerous items. Avoid being entangled, jammed, dragged, or knocked down by the main unit; otherwise, personal or property damage may be resulted.

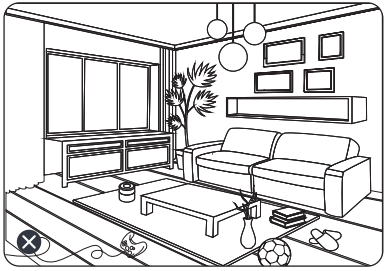

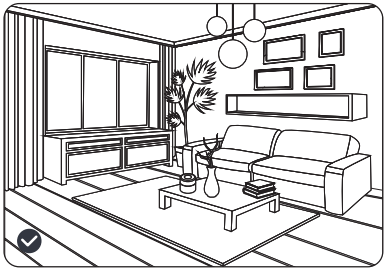

2. Avoid using this product in the wading area; otherwise, the fan may be damaged, affecting the performance of the vacuum cleaner.

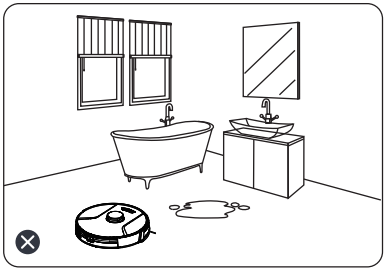

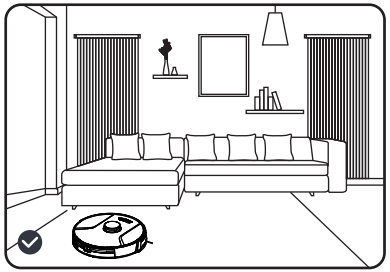

Installation

1、Download Smart Life APP from your APP store, register and log in the APP. Make sure that Wi-Fi is 2.4GHz before network connection.

2、Preparation: tap “+” on upper-right corner to add your robot.

3、The device supports AP mode:
- Choose “Robot Vacuum (Wi-Fi)” in Small Home Appliance column.
- Make sure that Wi-Fi is 2.4GHz and input correct Wi-Fi password.
- Long press Wi-Fi button on robot for 3s’, make sure that Wi-Fi indicator light is blink. Tick “Confirm the indicator is blinking rapidly” in APP interface, click “Next” and choose AP mode in pop-up window.
- Find password-less hot-spot which started with SmartLife-XXXX in your Wi-Fi list and click to connect it. After successfully connected to the hot-spot, pls return back to SmartLife APP, APP will automatically jump to robot connection interface. Wait the connection and robot can be operated after connection done.

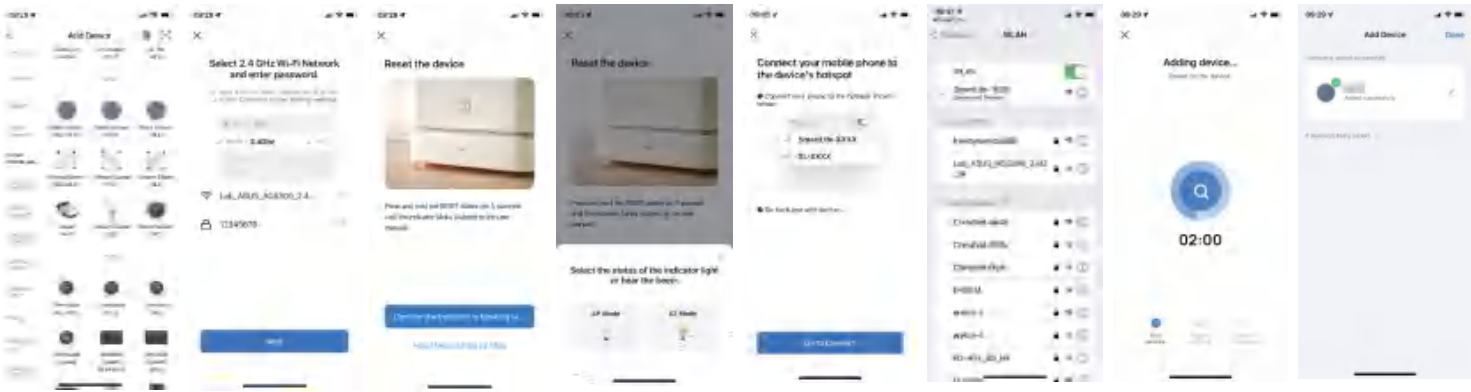

Description of App Icons and Buttons

Icons and Descriptions	
	Entire house cleaning: The vacuum cleaner generates a map of the entire house through sensor scanning, and automatically plans the optimal cleaning path.
	Configured zone cleaning: You can configure a zone in a certain place on the app map. Then, the vacuum cleaner will automatically move to the zone for cleaning.
	PIN N GO: You can specify a point on the app map. Then, the vacuum cleaner will automatically move to the point,and clean the 1.6mx1.6m zone centered on this point. You can click or drag on the map to set the target point.
	Selected zone cleaning: After the vacuum cleaner generates a map of the entire house, you can select one or more zones for cleaning through the app.
	Set a restricted zone for cleaning.
	Return to docking station: When this icon is steady on, the vacuum cleaner automatically returns to the docking station for charging. When this icon blinks, the vacuum cleaner stops returning to the docking station.
	Scheduled mode: You can make a reservation to carry out a scheduled cleaning task in 24 hours within 7 days through the app.

Button	Description	Function	Function Description
	Power button	Press this button to power on the machine.	Press and hold this button for 3s to power on the machine
		Press and hold this button to power off the machine.	Press and hold this button for 3s to power off the machine.
		Press this button to plan the cleaning path.	Press this button for 300ms.
		Press this button to pause.	Press this button for 300ms.
	"Return to docking station" button	Press this button to return to the docking station.	Press this button for 300ms.
		Press this button during the "return to docking station" process to pause this process.	Press this button for 300ms.
	Wi-Fi button	Hotspot pairing (AP mode)	Press and hold this button for 3s.

Dust Box, Water Tank, and Mopping Cloth Assembly

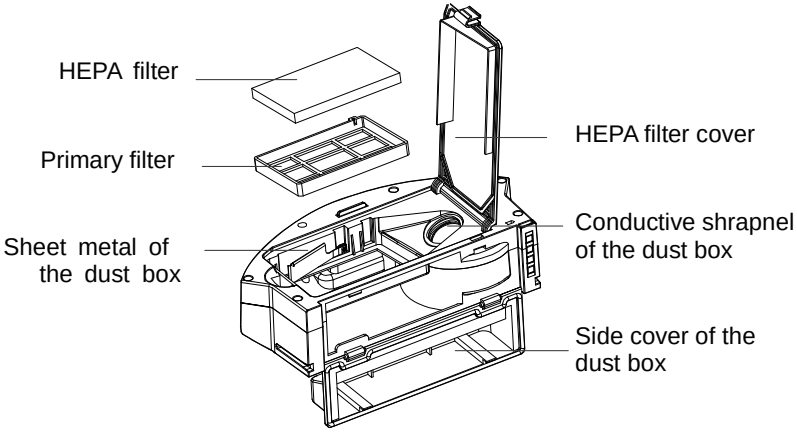

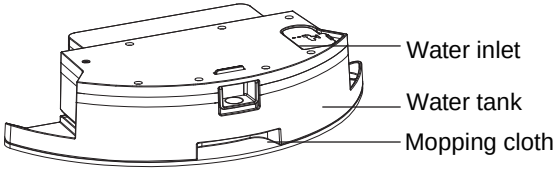

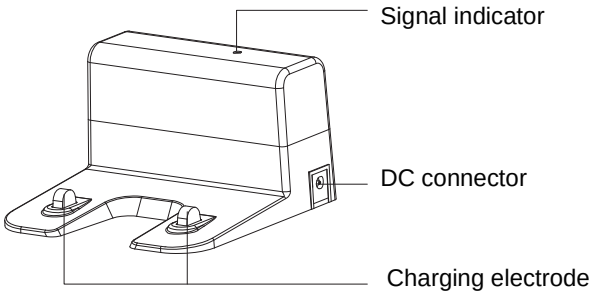

Preparations

Remove the protective strip
Before using the main unit, remove the protective strip from the main unit.

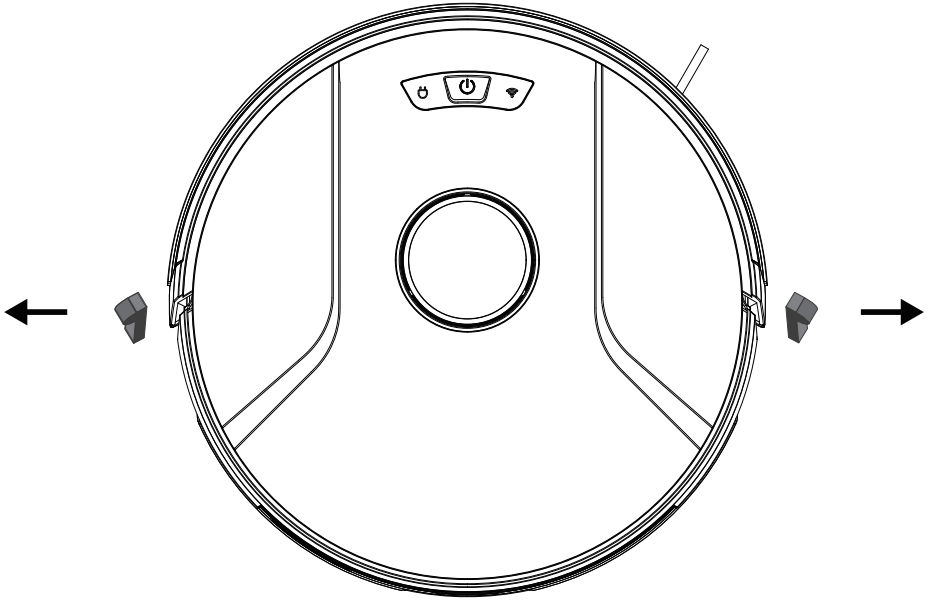

Charging the Main Unit

1. Place the docking station on the flat ground against the wall. Do not place any articles 0.5m to the left and right of the docking station and 1.5m in front of the docking station.

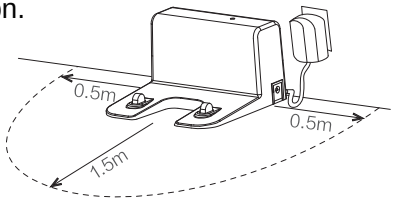

2. Connect the docking station to the power supply.
3. Install the side brushes.

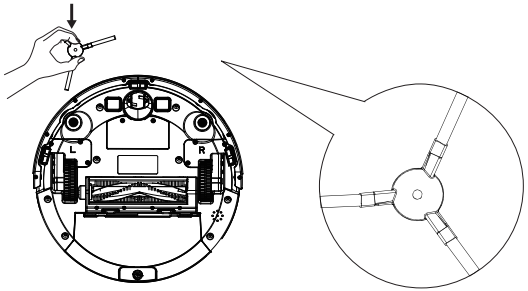

4. Place the main unit on the docking station to charge the main unit. During charging, the indicator blinks. When charging is completed, the indicator is steady on. It takes about 4-5hours to fully charge the main unit.

During the cleaning process, the main unit automatically checks its power level. If the power is insufficient, the main unit activates the "Return to docking station" mode, and automatically returns to the docking station for charging.
Alternatively, you can tap the "Return to docking station" button in the app to activate the "Return to docking station" mode of the main unit.

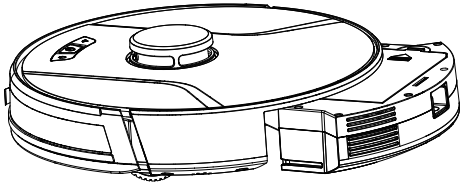

Note:

Do not use the docking station in a highly reflective environment such as the environment exposed to direct sunlight or with mirrors nearby.
To ensure the normal working time of the main unit, fully charge the main unit before use. The charging time is about 4-5 hours.
To ensure the safety of charging and prevent the damp cloth from damaging the floor, remove the water tank before charging the main unit.

Product Use/ Start Cleaning

For different cleaning needs, this product has a variety of cleaning methods to choose from. Various cleaning methods can be activated through the robot Button or APP.

Auto Cleaning
Applicable scenarios: The most commonly used cleaning method, the robot cleans the whole house in a Zig-zag path according to the actual home environment.

Setting method: In the shutdown state, long press the Power button , the robot indicator light is on to indicate that the device is turned on; Then short press the button or click the remote control Auto Cleaning button , the robot starts automatic cleaning.

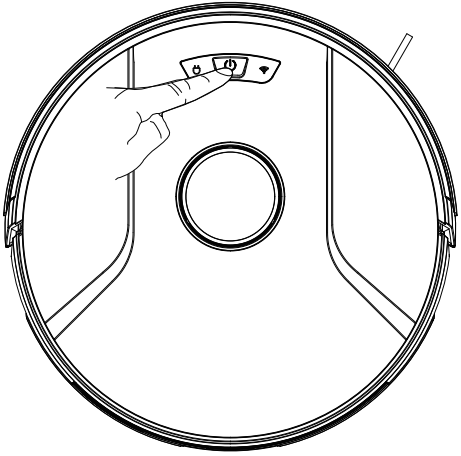

Use Instructions

Power on and off the machine

Tap and hold the button to power on the machine. Then, the power indicator is on, and the vacuum cleaner enters the standby state. When the vacuum cleaner is in a static state, press and hold the button to power off the machine and stop the current cleaning task.

Tip: The vacuum cleaner in charging state cannot be powered off.

Start cleaning

Press the button to start cleaning. Then, the vacuum cleaner dynamically plans the cleaning route according to the map generated after scanning, and completes cleaning of different zones one by one. In each zone, the vacuum cleaner first sweeps the floor along the wall, and then moves in zigzag mode to clean the remaining part of the zone in an orderly and efficient manner.

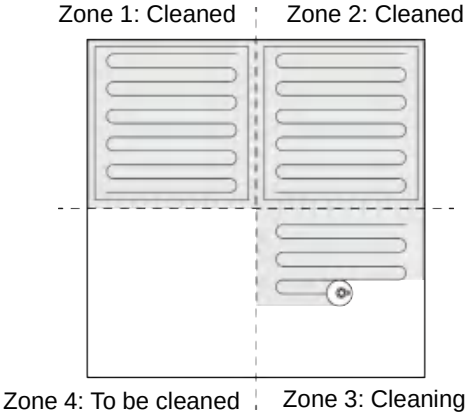

Tips:

- If the power is too low, the vacuum cleaner cannot start cleaning. Therefore, charge the vacuum cleaner before starting it.
- Before cleaning, tidy up all kinds of wires on the ground (including the power cord of the docking station). Otherwise, the vacuum cleaner may drag the wires while cleaning, which may cause power failures of other electric appliance or damage to items or wires.
- If the cleaning area is less than 2 square meters, the vacuum cleaner will clean the area twice by default.
- If the power is insufficient in the cleaning process, the main unit will automatically return to the docking station for charging. After the power is sufficient, the main unit will automatically return to the interrupted point to continue cleaning (ensure that you have enabled the resumable cleaning function).

Pause cleaning

If you need to add water to the water tank or wash the mopping cloth while the vacuum cleaner is working, press the button to pause. You can press the button to continue cleaning, or press the button to return to the docking station and stop the current cleaning task.

Tip:
In pause state, if the vacuum cleaner returns to the docking station for charging, the current cleaning task is stopped.

Charge the vacuum cleaner

Auto mode: After completing cleaning, the vacuum cleaner automatically returns to the docking station for charging.
Manual mode: In pause state, you can press the button to activate the "Return to docking station" mode. When the vacuum cleaner is being charged, the power indicator blinks in breathing manner.

Tip:
If the vacuum cleaner fails to find the docking station, it automatically returns to the starting point. In this case, you need to manually put the vacuum cleaner back to the docking station.

Enter the sleep mode

If no operation is performed in 10 minutes, the vacuum cleaner automatically enters the sleep mode, and the power indicator blinks every several seconds. In sleep mode, you can press any button to wake up the vacuum cleaner.

Tips:

- When the vacuum cleaner is being charged at the docking station, it cannot enter the sleep mode.
- If the sleep time exceeds 12 hours, the vacuum cleaner automatically powers off

Faulty state

If the vacuum cleaner encounters a fault while working, the power indicator blinks quickly in red, and a voice prompt is generated. For details about troubleshooting method, see "Troubleshooting".
Tips:

- In faulty state, if no operation is performed in 10 minutes, the vacuum cleaner automatically enters the sleep mode.
- In faulty state, if the vacuum cleaner returns to the docking station for charging, the current cleaning task is stopped.

Reset the Wi-Fi settings

If your mobile phone fails to connect to the vacuum cleaner due to reasons such as change of router settings and password forgotten, re-pair the vacuum cleaner with the mobile phone according to the Wi-Fi connection instructions.

Tip:
If the vacuum cleaner is in wait-to-connect state for more than 2 minutes, its Wi-Fi function is automatically disabled. To reconnect the vacuum cleaner to your mobile phone, reset the Wi-Fi settings.

PIN N GO

You can use the mobile app to specify a target point on the map. The vacuum cleaner will automatically plan the route and move to the specified point. If you specify a target point in the app when the vacuum cleaner is in standby or pause state, the vacuum cleaner will clean the 1.6mx1.6m square zone centered on this point. After cleaning, the vacuum cleaner will automatically return to the starting point and stop working.

Tip:
If you activate partial cleaning when the vacuum cleaner is in pause state, the current cleaning task will be stopped.

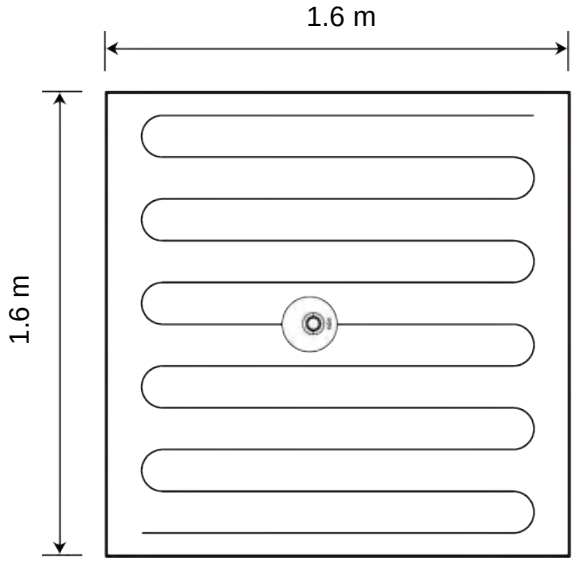

Set a restricted zone or virtual wall

You can use the mobile app to set a restricted zone or virtual wall. After the setting is completed, the vacuum cleaner will not enter the restricted zone or cross the virtual wall for cleaning.

Tips:

- Before using this function, you need to enable the map save mode for the vacuum cleaner in the mobile app.
- This function is only used to divide cleaning zones, but cannot be used to block dangerous zones.
- If the vacuum cleaner is moved or there are significant changes in the home environment, the map may become invalid and the settings of the virtual wall or restricted zone may be lost.

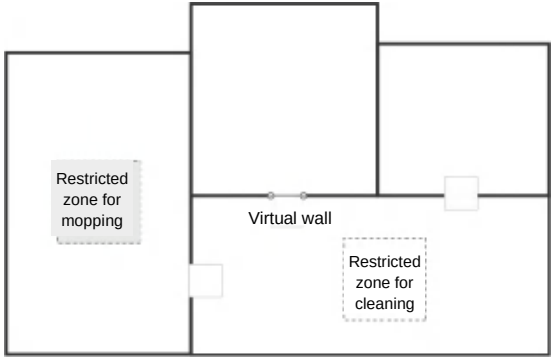

More app functions

Real-time map update	Volume adjustment
Cleaning record viewing	Map management
Robot voice changing	Firmware update
Robot positioning	Robot status viewing

Tip:
The functions and details of the app may change slightly due to continuous development and upgrade of the app. The specific functions and details of the app are subject to the actual version.

Selected zone cleaning

You can use the mobile app to select one or more zones for cleaning. The vacuum cleaner will clean one or more rooms based on the zone that you select on the app map.

Tips:

- Before using this function, you need to enable the map save mode for the vacuum cleaner in the mobile app, and the vacuum cleaner has already generated a map for cleaning.
- After cleaning starts, the main unit may move to a place beyond the selected zone. Make sure that you have cleared the obstacles on the ground around the selected zone, which cannot be used for safety isolation.

Scheduled cleaning

You can use the mobile app to set the scheduled cleaning time. When the specified time arrives, the vacuum cleaner will automatically start cleaning, and return to the docking station after it completes cleaning.

Configured zone cleaning

You can use the mobile app to configure a zone for cleaning. The vacuum cleaner will start cleaning based on the zone that you plan in the mobile app.

Tip:
After cleaning starts, the main unit may move to a place beyond the configured zone. Make sure that you have cleared the obstacles on the ground around the configured zone, which cannot be used for safety isolation.

Cleaning mode

You can use the mobile app to select the Energy saving, Standard, and Strong mode. The Standard mode is selected by default.

DND mode

During the Do-Not-Disturb (DND) period, the vacuum cleaner will not automatically continue cleaning or play the voice prompt. The power indicator dims. You can use the mobile app to disable the DND mode, or change the DND time range.

Using the Water Tank

* Do not use the mopping function on a carpet.
* After mopping the floor, empty the water tank in time and remove the cloth.

1. Add water.

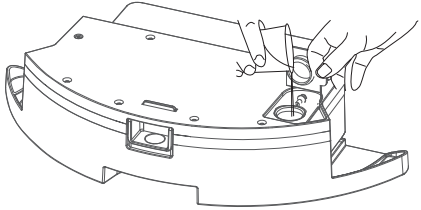

2. Install the cloth.

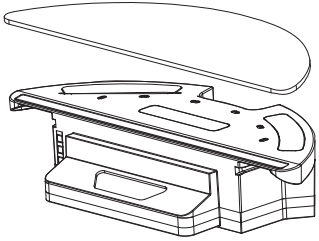

3. Install the water tank assembly and start mopping the floor.

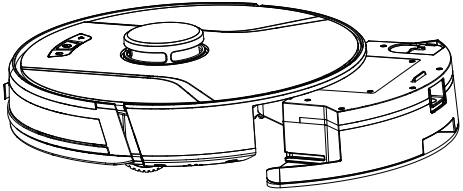

Parts Maintenance – Dust Box

Regular maintenance

To achieve the best cleaning effect, clean and maintain the main unit regularly according to the table below. Determine the frequency of cleaning and maintenance according to your use habits.

Recommended cleaning and maintenance frequency:

Component of the Main Unit	Cleaning Frequency	Replacement Frequency
Filter	Every week	Every 2 months
Roller brush	Every week	Every 6 to 12 months
Side brush	Every month	Every 3 to 6 months, or when it is obviously damaged
Roller brush cover	Every month	Every 3 to 6 months, or when the rubber silicon strip on the roller brush cover is obviously damaged
Sensor	Every month	/
Charging electrode	Every month	/
Omnidirectional wheel	Every month	/

1. Press down the button on the dust box to remove the dust box.

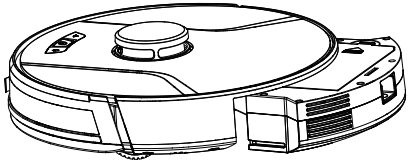

2. Open the side cover of the dust box.

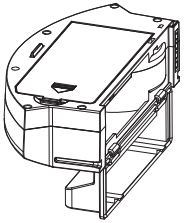

3. Dump the trash.

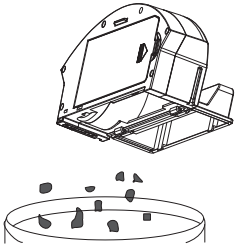

4. Open the HEPA filter cover.

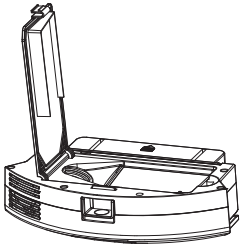

5. Take out the HEPA filter and primary filter. Tap the HEPA filter to remove dust. Water washing is not recommended for the HEPA filter.

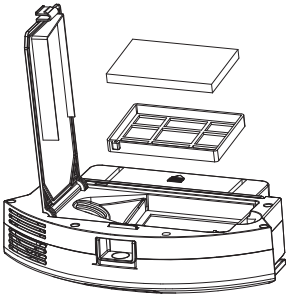

6. Wash the primary filter.

7. Wipe the dust box clean with a cloth. Do not wash the dust box with water.

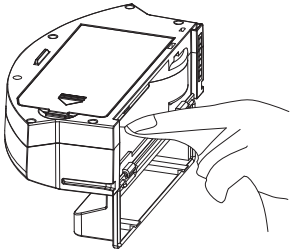

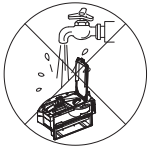

8. Dry the dust box and filter components, and keep them dry to ensure their service life.
Note: It is recommended that you wash the primary filter every 15 to 30 days. The maximum service life of the HEPA filter is 3 months.

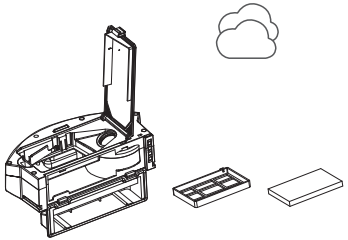

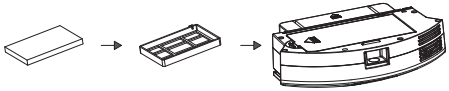

A. Install the primary filter and HEPA filter back to the dust box.
Note: 1. Before installing filters, ensure that the primary filter and HEPA filter are dry.
2. Do not expose the primary filter and HEPA filter to the sunlight.
B. Close the cover of the dust box, and install the dust box on the main unit.

Note: Do not wash the dust box with water.

Parts Maintenance – Water Tank and Mopping Cloth

1. Take out the water tank assembly.

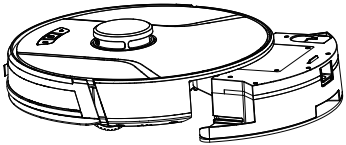

2. Take out the mopping cloth.

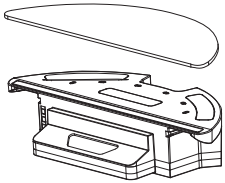

3. Empty the water tank.

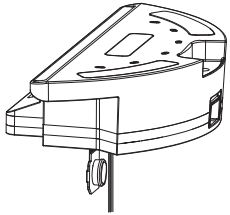

4. Clean the mopping cloth.

5. Dry the mopping cloth.

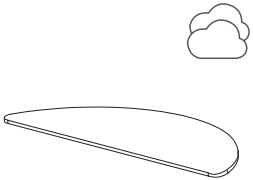

6. Dry or air dry the water tank.

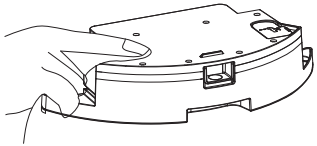

Parts Maintenance – Roller Brush and Side Brush

1. Open the roller brush cover assembly.

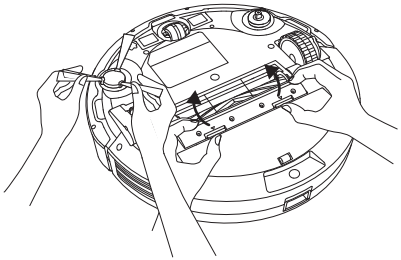

2. Take out the roller brush shaft.

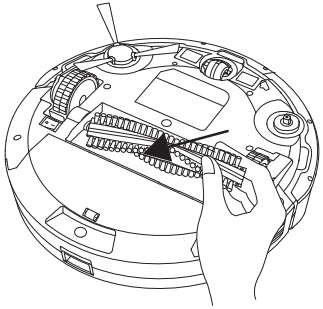

3. Use a tool to clean the tangled hair.

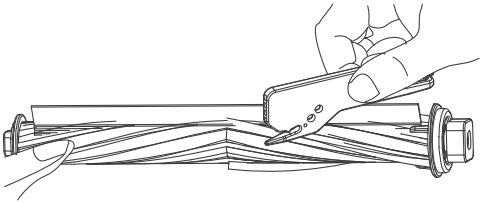

5. Clean the side brushes

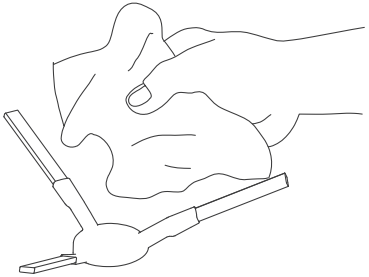

Parts Maintenance – Charging electrode, anti-fall sensor, drive wheel and omnidirectional wheel

1. Clean the charging electrode.

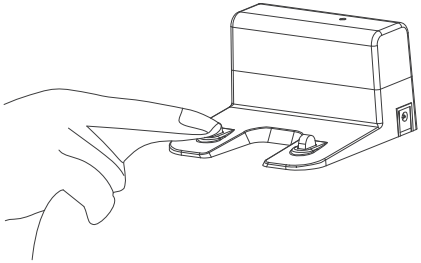

2. Clean the drive wheel and omnidirectional wheel.

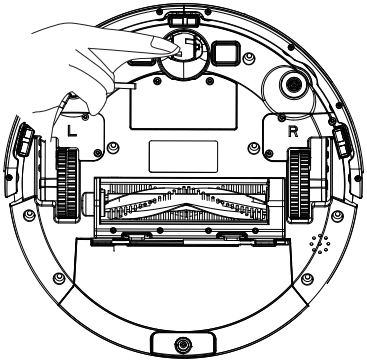

3. Clean the anti-fall sensor.

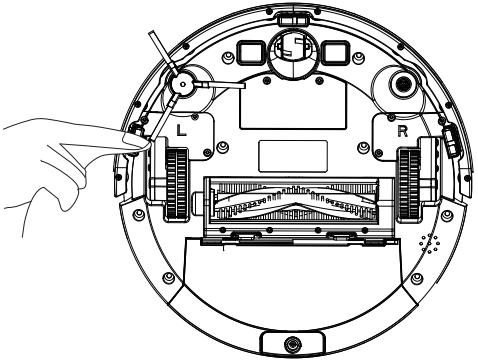

Troubleshooting

If the vacuum cleaner encounters a fault while working, the power indicator blinks quickly in red, and a voice prompt is generated. In this case, rectify the fault by referring to the table below.

Error Prompt	Solution
Error 1: Laser head is blocked or stuck, please check.	The laser ranging sensor is blocked or jammed by a foreign object. Remove the obstruction or foreign object. If the obstruction or foreign object cannot be removed, move the main unit to a new position and then start it.
Error 2: Collision sensor get stuck,please check the collision sensor	The bumper is stuck. Tap the bumper for several times to remove the foreign object. If there is no foreign object, move the main unit to a new position and then start it.
Error 3:Right wheel suspended, please remove the robot in a new place then start again.	The wheel is suspended. Please move the main unit to a new position and then start it.
Error 4: Anti-fall sensor is blocked,please check and clean anti-fall sensor.	The main unit is suspended. Please move the main unit to a new position and then start it. This fault may occur when the cliff sensor is too dirty. Please wipe the cliff sensor clean.
Error 5: Side brush is entangled, please clean the side brush.	The side brushes may be entangled with foreign objects. Please disassemble and clean the side brushes.

Error 6:Right/left wheel is entangled, please clean the right/left wheel.	The wheel may be entangled with foreign objects. Please clean the wheel and start the main unit again.
Error 7: The robot is trapped, please remove the robot	The main unit may be stuck. Please remove the obstacles around the main unit.
Error 8: Low battery, please charge..	The power is insufficient. Please charge the vacuum cleaner before using it.
Error 9:Charging problem. please check.	The battery temperature is too high or too low. Please wait and use the vacuum cleaner after the battery temperature becomes normal.
Error 10: Wall sensor is blocked, please check	The wall sensor is covered by dust. Please wipe the wall sensor.
Error 11: Uneven floor,please remove the robot in a new place then start again.	It is detected that the main unit is tilted upon start-up. Please place the main unit on an even ground and restart it.
Error 12: Top cover of laser is blocked or stuck, please check	The laser pressure sensor is pressed or stuck. Please move the vacuum cleaner to a new position and then restart it.

Troubleshooting

Fault	Solution
Failed to power on the machine	The battery power is insufficient. Please use the vacuum cleaner after charging it on the docking station. The battery temperature is too high or too low. Please use the vacuum cleaner when the ambient temperature is 0°C to 40°C.
Failed to charge the machine	The docking station is not connected to the power supply. Please make sure that both ends of the docking station power cord are properly connected. The docking station is not in proper contact with the main unit. Please clean the docking station shrapnel and the charging contact of the main unit. Check whether the docking station indicator is on.
Slow charging	When used in a high or low temperature environment, the main unit will automatically decrease the charging speed to extend the battery life. The charging contact area may be dirty. Please clean the area with a dry cloth.
Failed to return to the docking station	There are too many obstacles around the docking station. Please place the docking station in an open area. The main unit is too far away from the docking station. Try to place the main unit near the docking station.
Abnormal behavior	The vacuum cleaner is powered off and then on again.
There is abnormal noise during cleaning.	The roller brush, side brushes, or main wheel may be entangled with foreign objects. Clean them after powering off the vacuum cleaner. The omnidirectional wheel is covered by dust or is entangled during cleaning. It is recommended that you use a screwdriver to pull it out and rinse it.
The cleaning performance is degraded, or ash is dropped.	The dust box is full. Clean the dust box. The filter is blocked. Clean the filter. The roller brush is entangled with foreign objects. Clean the roller brush.

The Wi-Fi network cannot be connected.	The Wi-Fi function is not activated. Reset the Wi-Fi connection, and try again. The Wi-Fi signal is not good. Ensure that the main unit is located in a place with good Wi-Fi signals. The Wi-Fi connection is abnormal. Reset the Wi-Fi settings, download the mobile app of the latest version, and try to connect to the Wi-Fi network again. The Wi-Fi network suddenly cannot be connected. The family router settings may be incorrect. In this case, contact the customer service for help.
Scheduled cleaning cannot be carried out.	The power is insufficient. Scheduled cleaning will be started only when the remaining power is more than 20%.
Is any power consumed if the vacuum cleaner always stays at the docking station?	The power consumption is extremely low when the vacuum cleaner always stays at the docking station. This helps to keep the battery in the best performance.
Is it necessary to charge the battery for 16 hours when the vacuum cleaner is used for the first three times?	The lithium battery does not have a memory effect. It can be used instantly after it is fully charged. There is no need to wait 16 hours.
The mopping module does not output water or the water output is small.	Check whether there is any water in the water tank. Use the mobile app to set the water output to the maximum value. Install the mopping cloth and mop stand properly according to the manual.
The power is insufficient during cleaning. After the vacuum cleaner returns to the docking station for charging, it does not continue cleaning.	Check whether the main unit is in DND mode. The vacuum cleaner will not continue cleaning in DND mode. The vacuum cleaner will not continue cleaning if the main unit is manually put back to the docking station.
The vacuum cleaner cannot return to the docking station after partial cleaning or after its position is moved.	The vacuum cleaner will re-generate a map after partial cleaning or after it is moved far away. If the main unit is far away from the docking station, the main unit may fail to return to the docking station by itself. In this case, manually put the main unit back to the docking station.
The vacuum cleaner misses some areas when cleaning.	The wall sensor or cliff sensor may get dirty. It is recommended that you wipe the sensors using a soft dry cloth.

Product Specifications

Category	Item	Specification
	Diameter	330 mm
Structure	Height	96 mm
	Net weight	2.7 kg
Battery	Voltage	14.4 V
	Battery	2600 mAh rechargeable lithium battery
Cleaning parameters	Dust box capacity	600 ml
	Charging type	Auto charging and manual charging
	Charging time	About 270 minutes
	Cleaning time	About 100 minutes
Main unit	Rated power (W)	28

* Due to the continuous improvement of the product, the product specifications are subject to the actual product. Our company reserves the right to update the product.

Security Information

Component Type	Hazardous Substance					
	Lead (Pb) and its compounds	Mercury (Hg) and its compounds	Cadmium (Cd) and its compounds	Hexavalent chromium (Cr(VI)) and its compounds	Polybrominated biphenyls (PBB)	Poly Brominated Diphenyl Ethers(PBDE)
Plastic parts	○	○	○	○	○	○
Metal parts	X	○	X	○	○	○
Circuit module of the Robot	X	○	X	○	○	○
Electronic component	○	○	○	○	○	○
Battery	○	○	○	○	○	○
Power cord (Metal part)	X	○	X	○	○	○

○: It means that the content of the hazardous substance in all homogeneous materials of the part is below the limit requirement specified in the currently valid edition of EU ROHS.

X: It means that the content of the hazardous substance in at least one of the homogeneous materials of the component exceeds the limit requirement specified in the currently valid edition of EU ROHS. The content of the hazardous substance in the component is in the RoHS exemption list, and meet the environmental protection requirements of the 2011/65/EU and (EU)2015/863 ROHS Directive.

10

Standard compliance:

IEC/EN 60335-1	IEC/EN 60335-2	EN 55014-1	EN 55014-2
EN 300 328	EN 301 489-1	EN 301 489-17	FCC Part 15B

FCC STATEMENT :

This device complies with Part 15 of the FCC Rules. Operation is subject to the following two conditions:
This device may not cause harmful interference, and
This device must accept any interference received, including interference that may cause undesired operation.

Warning: Changes or modifications not expressly approved by the party responsible for compliance could void the user's authority to operate the equipment.

NOTE: This equipment has been tested and found to comply with the limits for a Class B digital device, pursuant to Part 15 of the FCC Rules. These limits are designed to provide reasonable protection against harmful interference in a residential installation. This equipment generates uses and can radiate radio frequency energy and, if not installed and used in accordance with the instructions, may cause harmful interference to radio communications. However, there is no guarantee that interference will not occur in a particular installation. If this equipment does cause harmful interference to radio or television reception, which can be determined by turning the equipment off and on, the user is encouraged to try to correct the interference by one or more of the following measures:
Reorient or relocate the receiving antenna.
Increase the separation between the equipment and receiver.
Connect the equipment into an outlet on a circuit different from that to which the receiver is connected.
Consult the dealer or an experienced radio/TV technician for help.

FCC Radiation Exposure Statement:
This equipment complies with FCC radiation exposure limits set forth for an uncontrolled environment.
This equipment should be installed and operated with minimum distance 20cm between the radiator & your body.