Before Use the device
Remove the belt clip

Before insert batteries into the device, first pull the belt clip latch away from the device(See PIC02

Installing the batteries

1.Slid down the battery compartment cover(See pic03).
2.Insert 3*AAA batteries(Not included)
3.Position the batteries according to polarity making on the battery compartment.
4.After placing batteries into correct positions, replace the battery cover(See PIC04

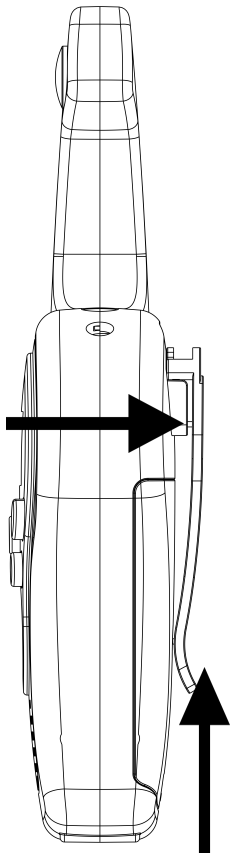

PIC 02

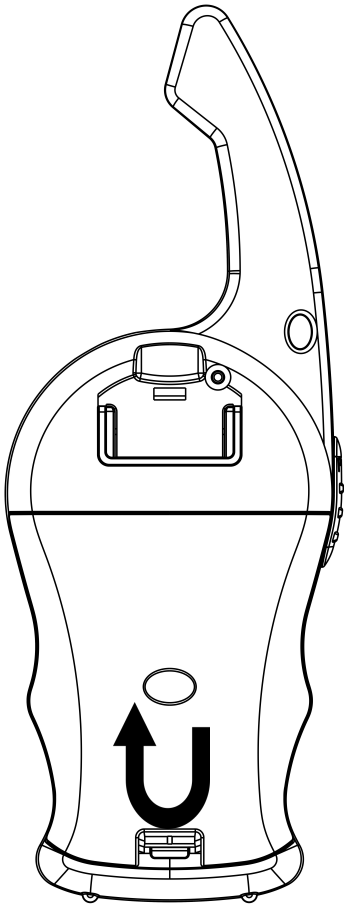

PIC 03

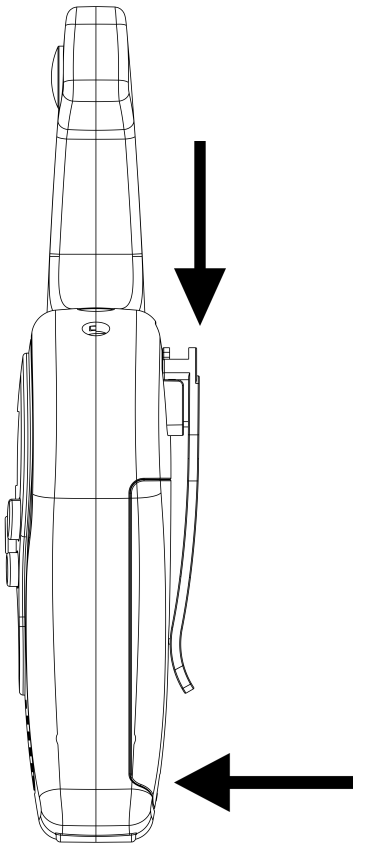

PIC 04

Using the device

1.Turning the device on/off:

Switch on the device: press and hold on the on/off button for 3 seconds, then you will hear a beep sound.
Switch of the device: press and hold on the on/off button for 3 seconds, then you will hear a beep sound.

2. Adjusting the volume:

To increase the volume, press the Up ▲ button and press the Down ▼ button to decrease volume.
Note: The volume level is displayed on the screen.

3. Low Battery Indication.

The battery voltage level is indicated by the numbers of squares present inside the battery icon on the LCD Screen.
Battery Full
Battery 2/3 charged
Battery 1/3 charged
Battery empty
When the battery voltage is low, the battery icon will flash and a beep will be heard to indicate that the batteries need to be replaced or recharged.

4. Receiving / transmitting communications:

The devices are in 'Reception' mode when it is turned ON and no transmitting, when a signal is received on the current channel, the LCD will display in reception.
When you press the PTT(push to talk) button, the devices switches to "Transmission" mode.
Hold the device in a vertical position with the Mic(microphone) 5-10cm away from your mouth. While holding the PTT button, speak into the microphone in a normal tone of voice.
Release the PTT button when you have finished transmitting.
For others to receive your transmission, they must be on the same channel with you.

Note:

1.The maximum talking range is 5km, it will depended on your surroundings and environment. It will be affected by obstructions such as hills or buildings.
2.Don' t try to use two devices which are less than 1.5mm(5 feets) apart, otherwise, you may experience interference.

5. Changing Channels:

Press the MENU button one time, The channel number will flash on the display.
Press the up ▲ / down ▼ button to change the channel,
Press the PTT button to confirm and return to stand-by mode.
Note: If no button is pressed within 15 seconds during setting, the device will return to stand-by mode.

6. CTCSS(Continues Tone Coded Squelch System)

Press the MENU button twice, the current CTCSS code will flash on the display,
Press the up ▲ / down ▼ button to change the 61 available codes.
Press the PTT button to confirm and return to stand-by mode.

License free radio' s operating on the 400-470 MHZ frequency band, the device has 8/20/22 available radio channels, If there are many device users near you, there is a chance that some of the users are operating on the same radio channel.
To prevent that you receive signals from other users, sub-channels have been integrated.

When using CTCSS, a low frequency tone (between 67-250 HZ) will be transmitted along with the voice signal, There are 99 available tones to choose from,
You are free to choose one of the 99 available sub-channels, Due to filtering, these sub-channels will generally not be audible so they will not disturb the communication.

7. VOX (Hands free function)

Press the MENU button three times, the current VOX setting will flash on the display and the VOX icon will display.
Press up ▲ button to set the VOX sensitivity level between 1 and 3 level(level 3 is the high sensitive level).
Press down ▼ button until "OF" appears on the display to turn VOX OFF.
Press the PTT button to confirm and return to stand-by mode.

In VOX mode, the radio will transmit a signal when it is activated by your voice or other sound around you.
VOX operation is not recommended if you plan to use your device in a noisy or windy environment.

Note: VOX mode will be over ride when you press the PTT button

8. Scanning for an active radio channel

Press and hold the UP ▲ button 2 seconds: the "SCAN" function indicator will appear on the display and the channel will scan continuously from 1 to 8/20/22. once an active channel is found, the scanning will stop and you can listen to the transmission.

When the transmission is on the found channel stop, the scanning will resume automatically.
Note: If you press PTT button while listening to a found channel, the device will go back to stand-by mode on the found channel.

9. Monitor

Press and hold the DOWN ▼ button about 3 seconds to active monitor.
Release the DOWN ▼ button return to stand by mode.

10. Setting the call Tone

The device has 10 call tones
Press the MENU-button 4 times, "CA" is displayed and on the current call tone.
Press the UP ▲ / Down ▼ button to change another Call Tone.
Press the PTT button to confirm and return to stand-by Mode.

11, Sending a call Tone.

Press the CALL button one time quickly, the call tone will be transmitted on the setting channel.

12. Roger Beep On/Off

After the PTT button is released, the device will send out a roger beep to confirm that have stopped talking.
Press the MENU button 5 times, "Ro" will be displayed.
Press the UP ▲ /Down ▼ button disable the roger beep ON/OFF.
Press the PTT button to confirm your selection and return to the stand-by mode.

13. Backlit Display.

Press any button except for the MENU button to activate the back light of the LCD display, The back light will light on about 5 seconds.

14. Headset connection,

The device can be used with headset (If there is headset packed together with the device)
The connector is located on the top of the device.
Insert the earpiece plug into the connector (2.5mm jack)
There is a small "PTT" button on the earpiece has the same function as the PTT button on the device.
When you use the PTT button from the earpiece, you must also use the microphone from t he earpiece to talk.
Note: Don' t connect other headset, it may damage your device.

15. Battery saving function:

When the device has not been used for 6 seconds, the economy mode is automatically activated, This does not affect the reception of transmission and the stand by mode is automatically re-activated as soon as signal is detected.

16. Buit-in Flash light

Your device has a built-in flash light that can be used in sending light signals or for our lighting needs.

17. Lock & Unlock the device

Press and hold MENU-button for 3 seconds to lock the device. The button lock icon is displayed on the LCD screen.

Press and hold MENU button for 3 seconds to unlock the device.

18. Technical specifications

Frequency	400-470MHz
Channels	8/20/22 channels
Sub-code	CTCSS 61
Transmission Power	=<500mW ERP
Range	Up to 5 Km(Open field)
Battery type	3xAAA Alkaline/rechargeable batteries(Not included)
Modulation Type	FM – F3E
Channel spacing	12.5kHz(Narrow band)

Channel and Frequency(MHZ)
Europe(8CH)

Ch.	Frequency	Ch.	Frequency	Ch.	Frequency
1.	446.00625	4.	446.04375	7.	446.08125
2.	446.01875	5.	446.05625	8.	446.09375
3.	446.03125	6.	446.06875		

USA(22CH)

Ch.	Frequency	Ch.	Frequency	Ch.	Frequency	Ch.	Frequency
1.	462.5625	7.	462.7125	13.	467.6875	19.	462.6500
2.	462.5875	8.	467.5625	14.	467.7125	20.	462.6750
3.	462.6125	9.	467.5875	15.	462.5500	21.	462.7000
4.	462.6375	10.	467.6125	16.	462.5750	22.	462.7250
5.	462.6625	11.	467.6375	17.	462.6000		
6.	462.6875	12.	467.6625	18.	462.6250		

This device complies with Part 15 of the FCC rules. Operation is subject to the following two conditions: 1) this device may not cause harmful interference, and 2) this device must accept any interference received, including interference that may cause undesired operation.

Note: This equipment has been tested and found to comply with the limits for a Class B digital device, pursuant to part 15 of the FCC Rules. These limits are designed to provide reasonable protection against harmful interference in a residential installation. This equipment generates uses and can radiate radio frequency energy and, if not installed and used in accordance with the instructions, may cause harmful interference to radio communications. However, there is no guarantee that interference will not occur in particular installation. If this equipment does cause harmful interference to radio or television reception, which can be determined by turning the equipment off and on, the user is encouraged to try to correct the interference by one or more of the following measures:

--Reorient or relocate the receiving antenna.

--Increase the separation between the equipment and receiver.

--Connect the equipment into an outlet on a circuit different from that to which the receiver is connected.

--Consult the dealer or an experienced radio/TV technician for help.

Changes or modifications not expressly approved by the party responsible for compliance could void the user’s authority to operate the equipment.

FCC Radiation Exposure Statement

This transmitter may operate with the antenna documented in this filing in Push-to-Talk and body-worn configurations.

RF exposure compliance is limited to the specific belt-clip accessory configurations as documented in this filing and the separation distance.

between user and the device or its antenna shall be at least 2.5 cm.

DO NOT transmit for more than 50% of total radio use time, more than 50% of the time

Can cause RF exposure compliance requirements to be exceeded.