W400/200 SERIES

INSTALLATION GUIDE

Content

1. Signal Booster Improves Cellular Signals 2
2. Signal Booster Package 4
   1) KITS list and function 4
   2) Signal Booster WFB5B Series Datasheet 5
3. Installation 7
   1) Donor Antenna Installation 7
   2) Donor Antenna Installation Figure 8
   3) Signal Booster Oscillation Avoidance 9
   4) Installing Lightning Protection 10
   5) Running Outside Antenna Cable 10
   6) Installing the Inside Panel Antenna(s) 11
   7) Installing the Signal Booster 11
   8) Check the System Connection Correctly 12
4. Post Install Setup 13
   1) Install APP 13
   2) APP Interface Guide 14
   3) Use APP to set and adjust signal booster 16

HONG KONG KONING INDUSTRIAL LIMITED
Tel:0086-755-2906 9062
E-mail:rick@wisdomfer.com

1. Signal Booster Improves Cellular Signals

In our real life, we practice to install signal booster to eliminate the problems that UE can't receive signal from cell tower as construction material or other blocks.

As figure show: we install one donor antenna at a location outside of the home or building where the strongest cell signal is present. The donor antenna receives and sends that weak signal via coax cable to a signal booster located indoors. That weak signal is amplified by the booster and delivered via coax cable to an inside antenna which rebroadcasts the amplified signal within one or several areas where UE get improved signal. Signals from indoor cell devices are likewise picked up by the inside antennas, amplified by the signal booster and transmitted back to the cell tower via the outside antenna.

In fact, signal booster establishes the communication between UE and cell tower by amplify, relay weak signal which blocked in construct from UE and cell tower

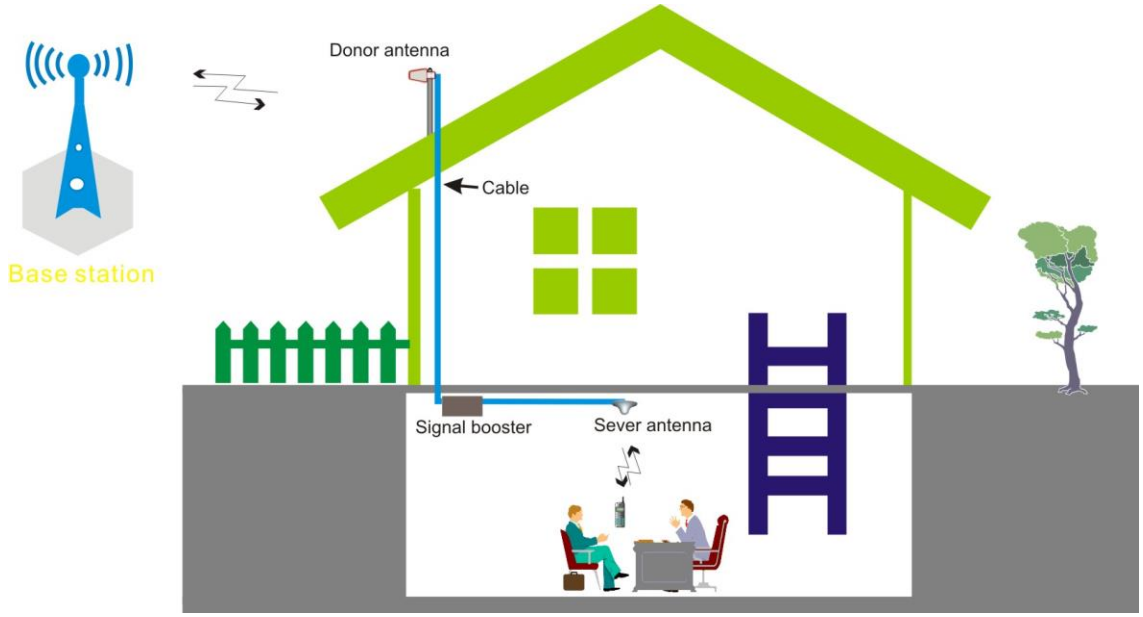

HONG KONG KONING INDUSTRIAL LIMITED
Tel:0086-755-2906 9062
E-mail:rick@wisdomfer.com

FCC Statement

Any Changes or modifications not expressly approved by the party responsible for compliance could void the user's authority to operate the equipment.

This device complies with part 15 of the FCC Rules. Operation is subject to the following two conditions:

(1) This device may not cause harmful interference, and

(2) This device must accept any interference received, including interference that may cause undesired operation.

This equipment complies with FCC radiation exposure limits set forth for an uncontrolled environment .This equipment should be installed and operated with minimum distance 40cm between the radiator& your body.

ISED RSS Warning/ISED RF Exposure Statement

ISED RSS Warning:

This device complies with Innovation, Science and Economic Development Canada licence-exempt RSS standard(s). Operation is subject to the following two conditions: (1) this device may not cause interference, and (2) this device must accept any interference, including interference that may cause undesired operation of the device.

Le présent appareil est conforme aux CNR d'ISED applicables aux appareils radio exempts de licence.

L'exploitation est autorisée aux deux conditions suivantes:

(1) l'appareil ne doit pas produire de brouillage, et

(2) l'utilisateur de l'appareil doit accepter tout brouillage radioélectrique subi, même si le brouillage est susceptible d'en compromettre le fonctionnement.

ISED RF exposure statement:

This equipment complies with ISED radiation exposure limits set forth for an uncontrolled environment. This equipment should be installed and operated with minimum distance 40cm between the radiator& your body.This transmitter must not be co-located or operating in conjunction with any other antenna or transmitter. Le rayonnement de la classe b repecte ISED fixaient un environnement non contrôlés.Installation et mise en œuvre de ce matériel devrait avec échangeur distance minimale entre 40 cm ton corps.Lanceurs ou ne peuvent pas coexister cette antenne ou capteurs avec d'autres.

Notice: When this device operating in the 1710-1755Mhz band, the maximum antenna should be fixed height of 10 meters above ground. The maximum antenna gain should less than 9 dBi.

Don't use the unauthorized antennas ,cables.

HONG KONG KONING INDUSTRIAL LIMITED
Tel:0086-755-2906 9062
E-mail:rick@wisdomfer.com

2. Signal Booster Package

1) KITS list and function

Picture	Description	Function
	Donor antenna	Be installed in outside, receive signal from cell tower
	Coax cable	Connect booster with antenna or splitter, combiner and allow them to transmit with low loss
	Jumper	
	Signal booster	Amplify the uplink and downlink signal from UE and cell tower
	Panel sever antenna	Mounted in ceiling or wall. better lie in center of room or area
	Lightning surge protector	The protector is installed outside the building at the point of entry connected to a suitable ground and in line between the outside antenna and the signal booster
	Adapter	Power supply for signal booster
	Power cable, USA	

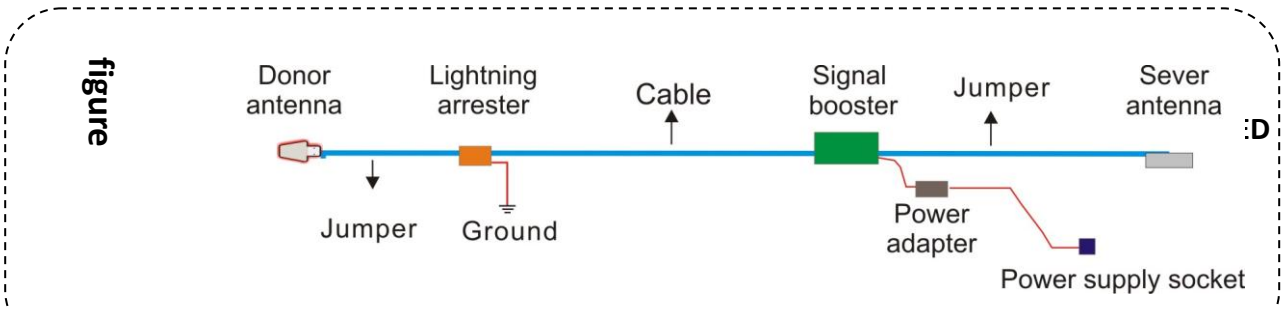

Warning: Any product modifications that use unauthorized antennas, cables, and/or coupling devices are prohibited by the FCC. Contact FCC for details: 1-888-CALL-FCC. Changes or modifications not expressly approved by Berk-Tel could void the user's authority to operate the equipment.

Use only the power supply provided in the package. Use of a no Berk-Tel electronics products may damage your equipment.

2) Signal Booster W400/200 Series Datasheet

Specification		
Frequency Range	Band 4: DL: 2110-2155 MHz	UL: 1710-1755MHz
	Band 5: DL: 869-894 MHz	UL: 824-849MHz
	Band 12: DL: 728-746 MHz	UL: 698-716MHz
	Band 13: DL: 746-757 MHz	UL: 776-787MHz
	Band 25: DL: 1930-1995 MHz	UL: 1850-1915MHz
	BT:2402~2480MHz, WIFI:2412~2462MHz(BT&WIFI module)	
Max. Gain	W400 DL ≧75dB	UL ≧ 65dB
	W200 DL ≧60dB	UL ≧ 50dB
Composite output power	W400 DL 27±2.0dBm	UL 23±3.0dBm
	W200 28dBm≥DL ≧22dBm	23.5dBm≥UL ≥ 17dBm
Pass band BW	Full band	
Manual Gain Control	30dB range, digitally controlled in 1dB steps, per link, per band	
Automatic Level Control	≧ 20dB	
Gain Flatness	≦ 10dB(P-P)	
Noise Figure	5dB nominal	
VSWR at operating frequencies	≤2:1 Typical	

HONG KONG KONING INDUSTRIAL LIMITED
Tel:0086-755-2906 9062
E-mail:rick@wisdomfer.com

Antenna isolation	Max Gain + 15dB
Maximum input power, no damage	-20dBm (DL) -0dBm (UL)
Group Delay	≦ 1μs
Intermodulation & Unwanted emission Error Vector Magnitude: Compliance 3GPP TS 25.143 Rel.10 & 3GPP TS 36 143 Rel.10 & FCC Part 15,20,22,24,27	
AC Supply	110/220 VAC, 50/60 Hz
Power Consumption	24W
MTBF	100000 hours
Monitoring	**Standard**
Local management and supervising	Local access via USB or Bluetooth (Mobile APP)
Remote management and supervising	Remote access via Wireless WIFI as optional
Alarm	Yes, amplifiers status, isolation status, temperature, AGC, RF overload etc.
Mechanical	**Standard**
I /O Port	N-Female
Housing	IP30 / NEMA1
RF Connector/ Impedance:	N-female / (Nominal)50Ω
Dimensions (L x W x H):	364*249*47.5mm
Weight	6.4kg (14.1lbs.) booster only
Cooling	Natural convection
Operating Temperature	-13º to 131º F or -25º to +55º C

HONG KONG KONING INDUSTRIAL LIMITED
Tel:0086-755-2906 9062
E-mail:rick@wisdomfer.com

Front view

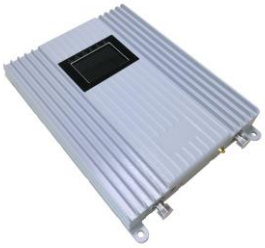

Side view

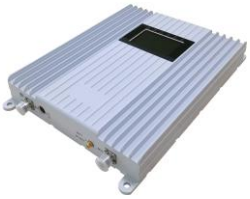

RF safety warning: any antenna used with this device must be located at least 8 inches from all persons.

Warning: Device cannot support home/personal use

WARNING. This is **NOT** a consumer device. It is designed for installation by FCC LICENSEES AND QUALIFIED INSTALLERS. You MUST have an FCC LICENESE or express consent of an FCC license to operate this device. Unauthorized use may result in significant forfeiture penalties, including in excess of $100,000 for each continuing violation.

3. Installation

1) Donor Antenna Installation

The main function of signal booster to amplify the weak signal from cell tower, “signal amplify” is multiplication algorithm: “input power x gain=output power” the gain rate is default before factory setting .so the stronger outside signal strength, the greater output power (good output power ensues better inside coverage area)

The outside air signal strength by donor antenna affect inside coverage area remarkably, different location,

HONG KONG KONING INDUSTRIAL LIMITED
Tel:0086-755-2906 9062
E-mail:rick@wisdomfer.com

floor, antenna mounted direction will influence the strength of outside signal by donor antenna

- Proper aiming of the outside antenna towards the source of the cell signal is very important. Generally, outside the building signal is good, so outside antenna be mounted at veranda or open view area, facing toward cell tower
- Cell tower height is at the height of 6-10 floor mostly .so under 10 floor building, try to find open view area to mount outside antenna. Above 10 floor, try to find veranda or platform to mount the outside antenna.
- Outside antenna location.
  The cell phone show full bar. If possible, use engineering cell phone 。 To test and choose the strongest signal point
- constant 3 times successful dial and High-quality phone talking, at the same time have fast data. Finally chose great place to install outside antenna
- The outside antenna direction should be facing toward cell tower

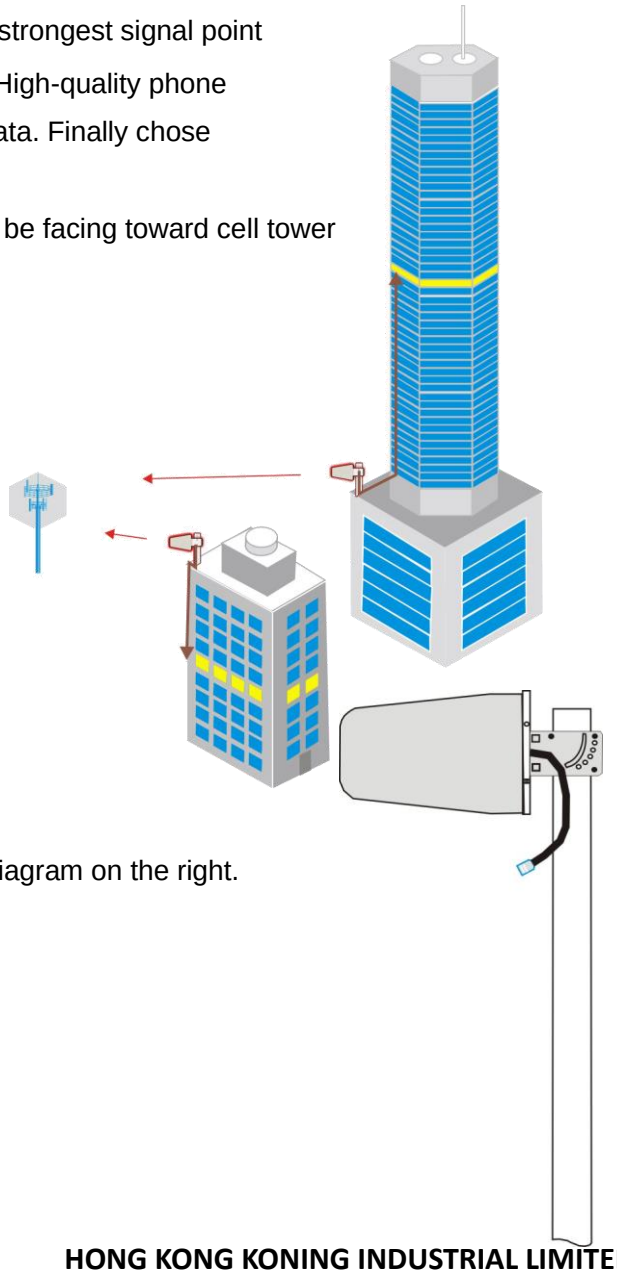

2) Donor Antenna Installation Figure

- Install the antenna according to the diagram on the right.
- Connect coaxial cable

HONG KONG KONING INDUSTRIAL LIMITED
Tel:0086-755-2906 9062
E-mail:rick@wisdomfer.com

3) Signal Booster Oscillation Avoidance

Signal booster is two-way (full duplexer) amplifier.so donor antenna and sever antenna should be adequate isolation to prevent any feedback “oscillations”. We take MIC and speaker for example to clear understanding, when we put MIC near speaker, the speaker produces sharp scream. In order to ensure signal booster work normally, the isolation between donor antenna and sever antenna is bigger 10-15dB than signal booster gain. Suppose signal booster gain is 70dB, then the isolation between donor antenna and sever antenna is 80-85dB.

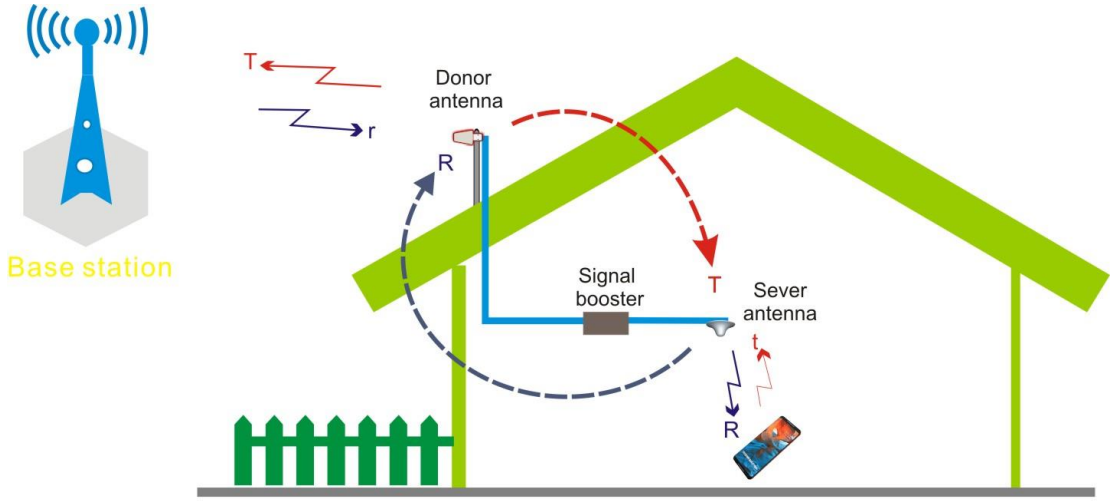

<u>As figure show:</u> signal booster amplify the signal “R” from cell tower, if inadequate isolation between donor antenna and sever antenna, the amplified signal “R” will broadcast back to donor antenna by sever antenna, and then the signal booster will amplify the “R” again , “R” flow back to donor antenna through sever antenna, be amplified again. After several circle, signal ‘R” will be stronger and stronger gradually up to signal booster limits and start oscillation. In inadequate isolation coverage area, the signa wave obviously, bad signal quality at the border of coverage area, easy drop words and break off

When Wisdom signal booster detect oscillation, the system will attenuate internal gain to remove oscillation. but low gain will affect coverage area.

we can take some simple ways to get “safe separation distance “

a) **Vertical distance:** the donor antenna and sever antenna are two floors apart from

HONG KONG KONING INDUSTRIAL LIMITED
Tel:0086-755-2906 9062
E-mail:rick@wisdomfer.com

each other (for example: the coverage area is in floor1 and floor2, we should mount the donor antenna at over 4 floors. If there are no floor, you can calculate at one floor of 4 meter, try to raise the height of donor antenna.

b) **Horizontally distance:** the distance between donor antenna and sever antenna keep over 20-30 meters, better separated by wall

c) **Horizontally and vertical combination:** presume above two ways fail, combine them.

d) **Note:** donor antenna and sever antenna unable line -of-sight for each other (on other words, no matter where sever antenna can't see donor antenna directly)

Warning: In order to void Oscillation, Donor antenna must keep reasonable distance with Service antenna, not point the front of the outside antenna toward the service antenna.

4) Installing Lightning Protection

Install the Lightning Surge Protector (LSP) outside, in line with the coax cable from the outside antenna, near where the coax cable from the outside antenna will enter the building. Connect the Outside antenna cable to one of the connectors of the surge protector. Connect the other connector on the LSP to the cable entering the building. Ensure the LSP is properly grounded as close to the LSP as possible (ground wire not included).

Warning: We strongly recommend all installer to fit Lightning Surge Protector in site. Neither you nor the antenna are far away any electric power lines.

5) Running Outside Antenna Cable

If you are mounting the outside antenna to the outside wall of your home or building, the simplest way is to run the cable on the outside of the wall and attach it to the exterior of your home or office. Then drill a hole through the wall where you want the cable to appear on the inside of the building. Before drilling, make sure that there are no electrical outlets, sewer or water pipes, or electrical wiring in the wall that you are about to drill through as this could potentially harm you or damage the building.

Note: Existing TV cables already being used for another purpose cannot be shared with the cell booster installation. After drilling the required hole, run the cable through and seal it with cable bushings or a silicone-type sealant to enclose the hole that you have created. In some instances, it may be possible to run the cable up into the fascia of the attic overhang. In this circumstance, the cable will be accessible in the attic for further routing.

HONG KONG KONING INDUSTRIAL LIMITED
Tel:0086-755-2906 9062
E-mail:rick@wisdomfer.com

6) Installing the Inside Panel Antenna(s)

Panel antenna has certain directivity, if it is mounted in wall, preferably in the center of where the signal needs to be amplified.

If sever antenna is put in ceiling, it can be only put in where in the center of coverage area. but the signal strength will be little weak and coverage area will be smaller.

Sever antenna can't "see" the location where panel antenna be mounted and have enough safety isolation distance.

Warning: Try to keep at least 8 feet distance from all active users

- Splitter and combiner

The barriers such as wall will affect the signal transmission remarkably in indoor coverage area. We can separate multiple sever antenna by using a splitter or combiner to run around some barriers such as wall and cover the aimed area. For example, the sever antenna can't be mounted in adequate height as terrain limits, which will affect coverage greatly, we can also plant multiple sever antenna to improve coverage area

7) Installing the Signal Booster

Select a location for the signal booster which is away from excessive heat, direct sunlight, moisture and is not subject to high temperatures. Do not place the signal booster in an air-tight enclosure. Recommended installation locations for in-building signal boosters are in a closet or on a shelf where power is available. Attic installations may expose the booster to high heat.

Note: Do not install in areas subject to temperatures in excess of 150 °F.

Note: Maintain at least 6 inches of clearance from surrounding objects. Be careful when plugging the connector in so as not to damage the center pins on the connectors. Run the outside antenna cable to the signal booster and attach it to the connector labeled "BS" on the signal booster. Run the inside antenna cable to the signal booster and attach it to the connector labeled "MS" on the signal booster.

Warning: Ensure donor antenna and service antenna are all connected with signal booster before you power on booster

HONG KONG KONING INDUSTRIAL LIMITED
Tel:0086-755-2906 9062
E-mail:rick@wisdomfer.com

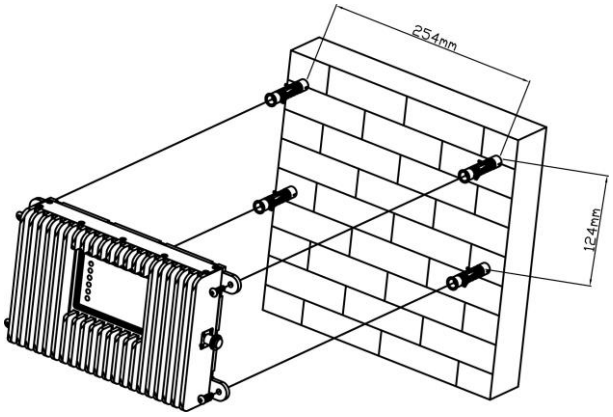

- Drill four holes on the wall using the position of you choose, fix expansion bolt in the holes
- Install booster on expansion bolt by screw
- Connect power cable to booster power port
- Fix booster tightly, and check out the booster working indicator lamp

8) Check the System Connection Correctly

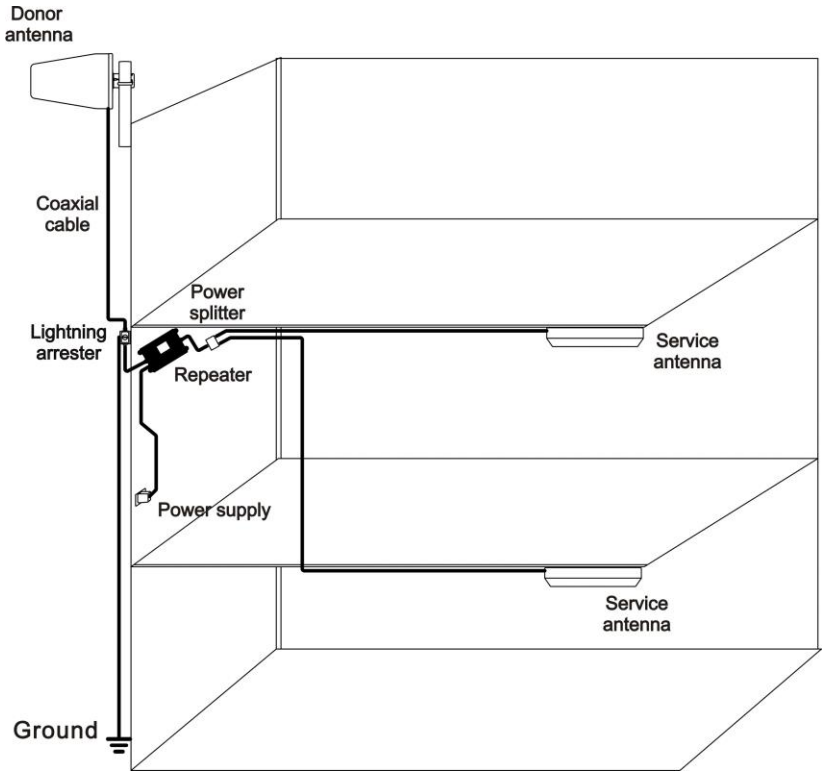

HONG KONG KONING INDUSTRIAL LIMITED
Tel:0086-755-2906 9062
E-mail:rick@wisdomfer.com

4. Post Install Setup

After signal booster installation finish, we will set signal booster according to scene environment to ensure system work normally.

Wisdom APP can help you to make setting and adjustment effectively after you install the APP in your smart phone.

1) Install APP

The device built-in Bluetooth&WIFI module, User can connect the device with phone by Bluetooth to run our APP. The device can be connected internet with WIFI to remote control the device by phone or laptop.

a) Scan attached QR code and obtain download link.

b) Download APP and install in mobile phone. During installation, system will show open Bluetooth, please confirm to open.

c) Finish installation, click “linkSignal” and operate.

d) Operate APP, system will search close booster and show the name.

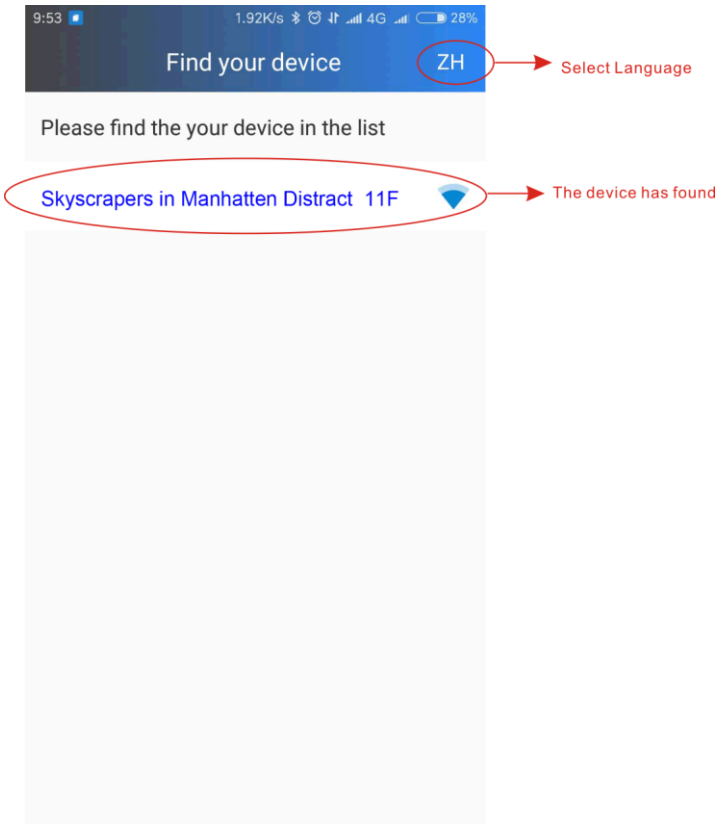

HONG KONG KONING INDUSTRIAL LIMITED
Tel:0086-755-2906 9062
E-mail:rick@wisdomfer.com

2) APP Interface Guide

a) Click the name of booster and enter the interface.

b) Click “more detail” to know every sub-band performance

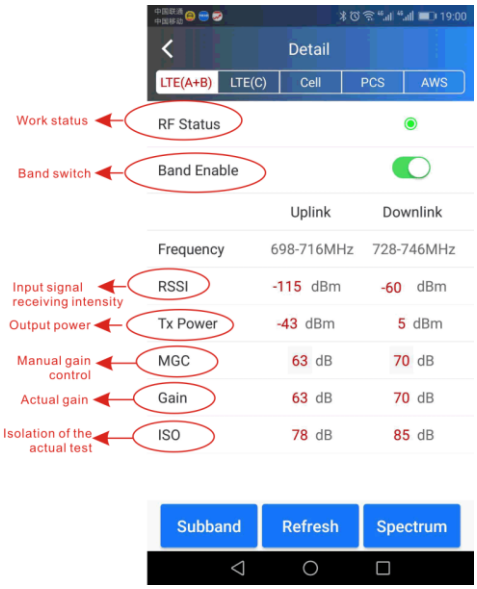

HONG KONG KONING INDUSTRIAL LIMITED
Tel:0086-755-2906 9062
E-mail:rick@wisdomfer.com

i. Band Enable can switch off or switch on the frequency
ii. Click MGC will get “set” interface, to set up the gain of uplink or downlink.

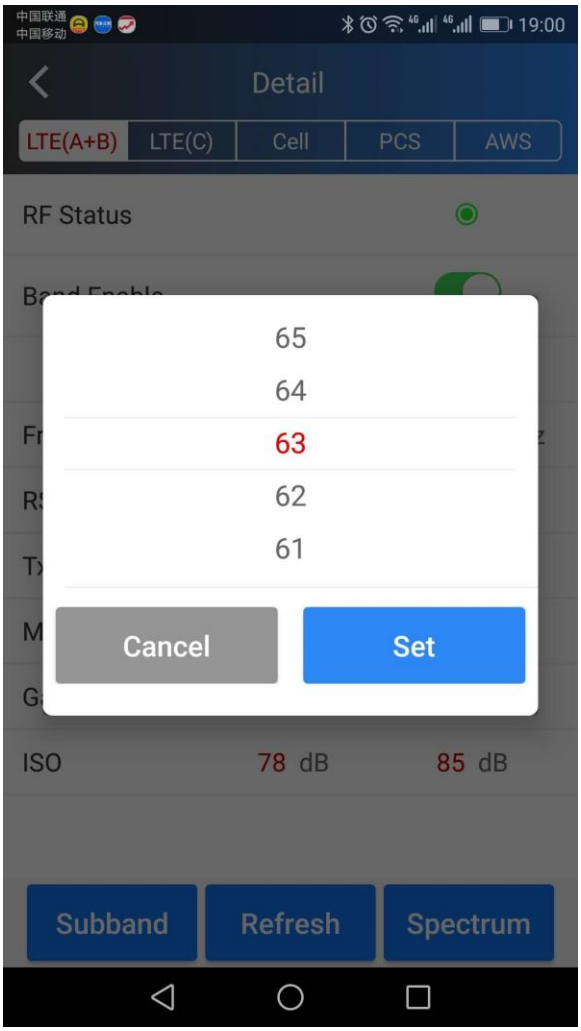

HONG KONG KONING INDUSTRIAL LIMITED
Tel:0086-755-2906 9062
E-mail:rick@wisdomfer.com

3) Use APP to set and adjust signal booster

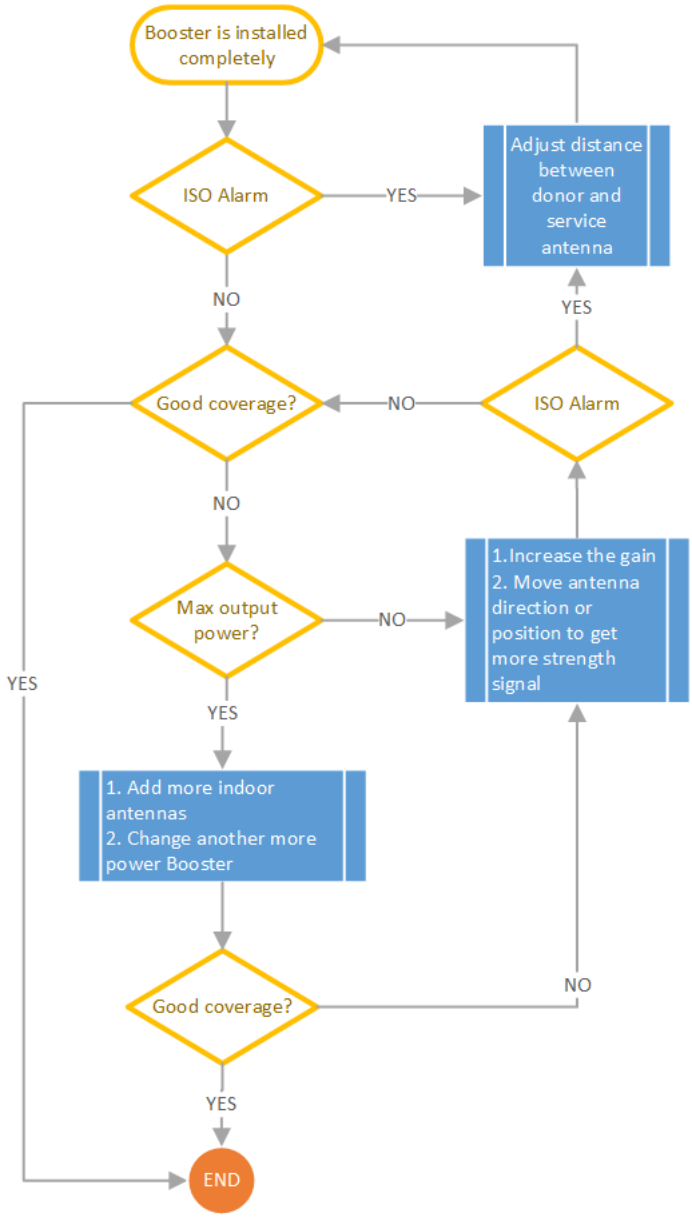

Note: Please refer to page 8 “Signal Booster Oscillation Avoidance”.

HONG KONG KONING INDUSTRIAL LIMITED
Tel:0086-755-2906 9062
E-mail:rick@wisdomfer.com