ulefone

Note 18 Ultra

Quick Guide

LANGUAGE:EN/DE/FR/ES/IT/RU/UA/JP/AR

[EN]

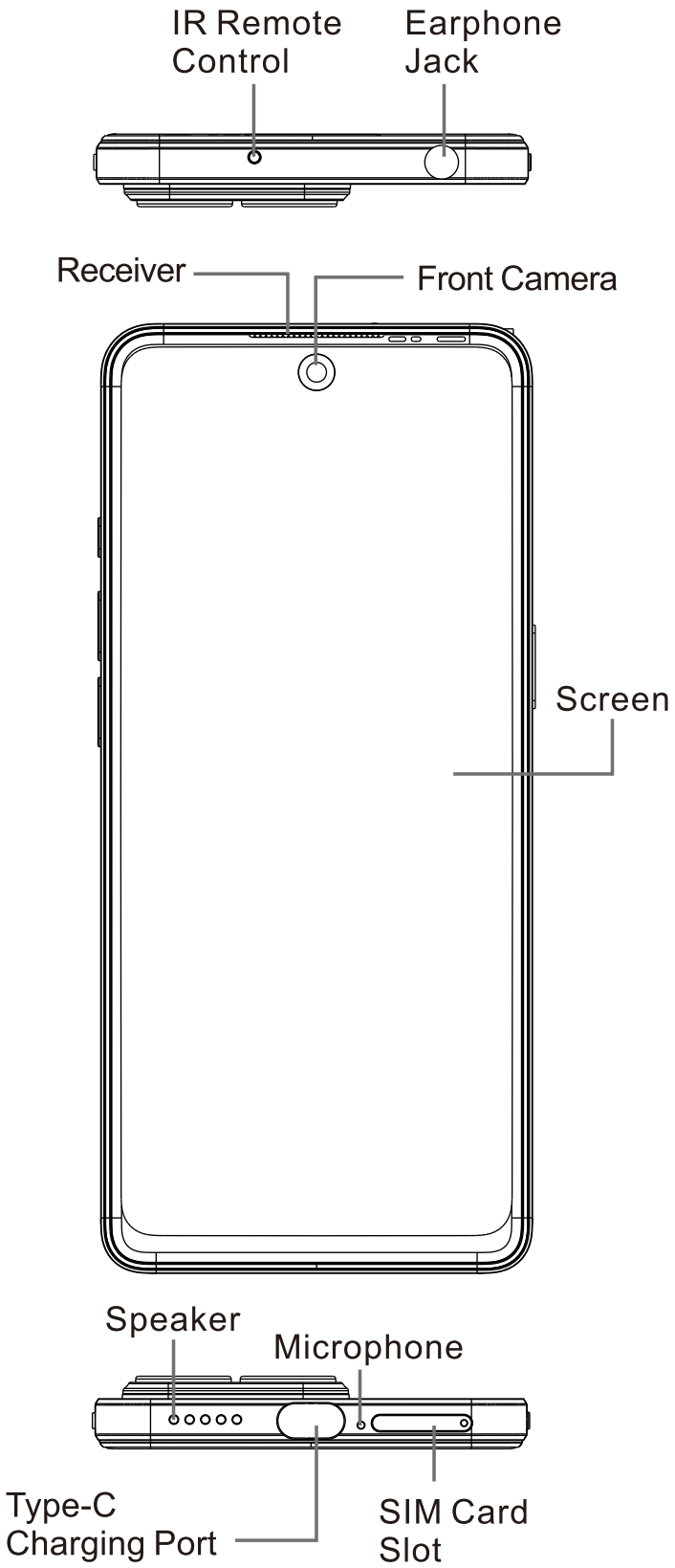
IR Remote Control
Earphone Jack
Receiver
Front Camera
Screen
Speaker
Microphone
Type-C Charging Port
SIM Card Slot

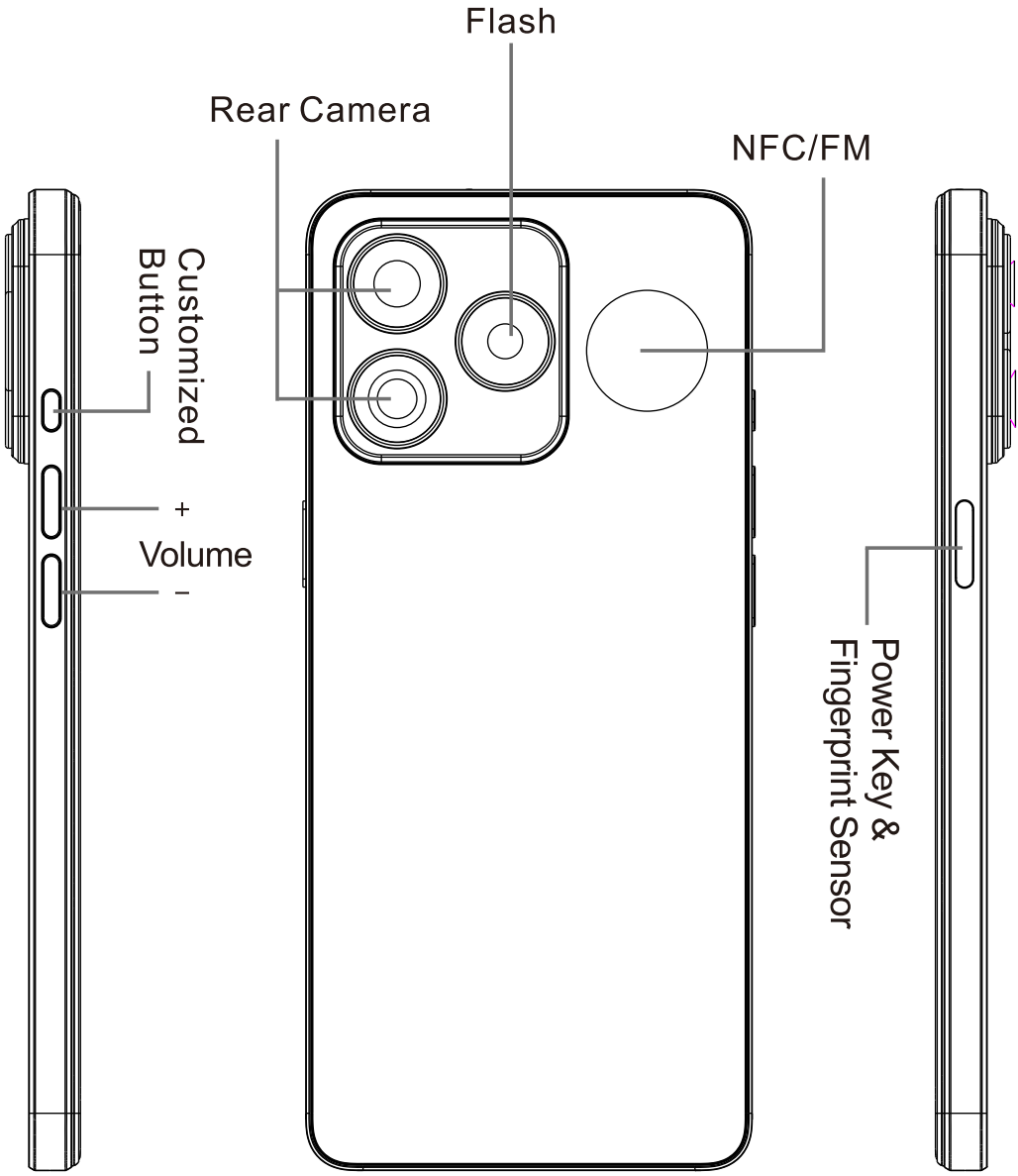
Flash
Rear Camera
NFC/FM
Customized Button
+
Volume
–
Power Key & Fingerprint Sensor

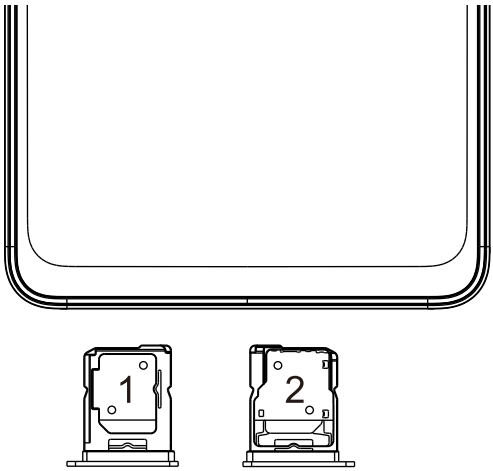

Card Slot Specifications:

Card Slot 1: SIM 1

Card Slot 2: SIM 2/TF Card

Network Bands:

GSM: B2/3/5/8

WCDMA: B1/2/4/5/6/8/19

CDMA: BC0/BC1/BC10

LTE-FDD: B1/2/3/4/5/7/8/12/13/17/18/19/20/25/26/28A/28B/66

LTE-TDD: B34/38/39/40/41

5G NR Sub6: N1/3/5/8/20/28/38/41/77/78

Face Unlock:

Setting > Face Unlock

Network Connection

WiFi: Setting > Network & Internet > WiFi

Hotspot:Setting > Network & Internet > Hotspot&tethering

[DE]

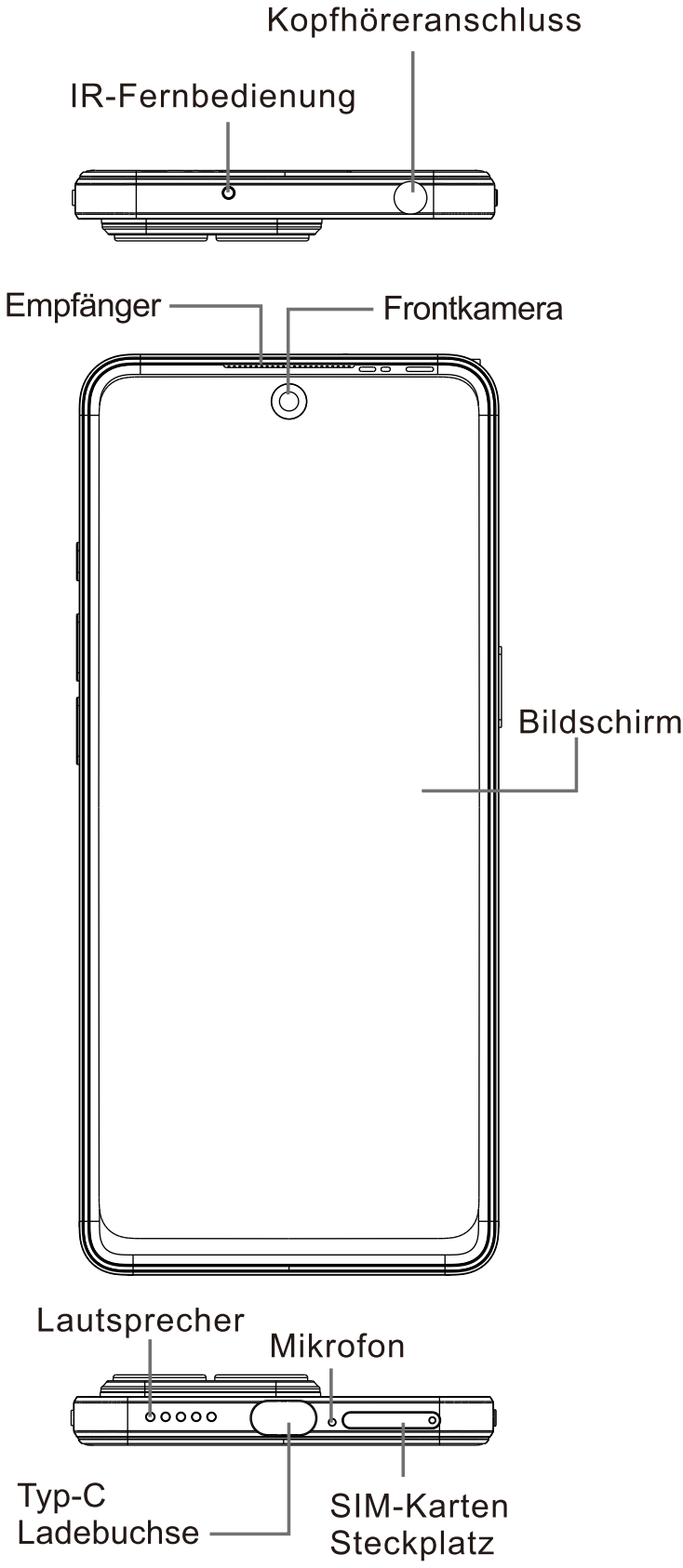
Kopfhöreranschluss
IR-Fernbedienung
Empfänger
Frontkamera
Bildschirm
Lautsprecher
Mikrofon
Typ-C
Ladebuchse
SIM-Karten
Steckplatz

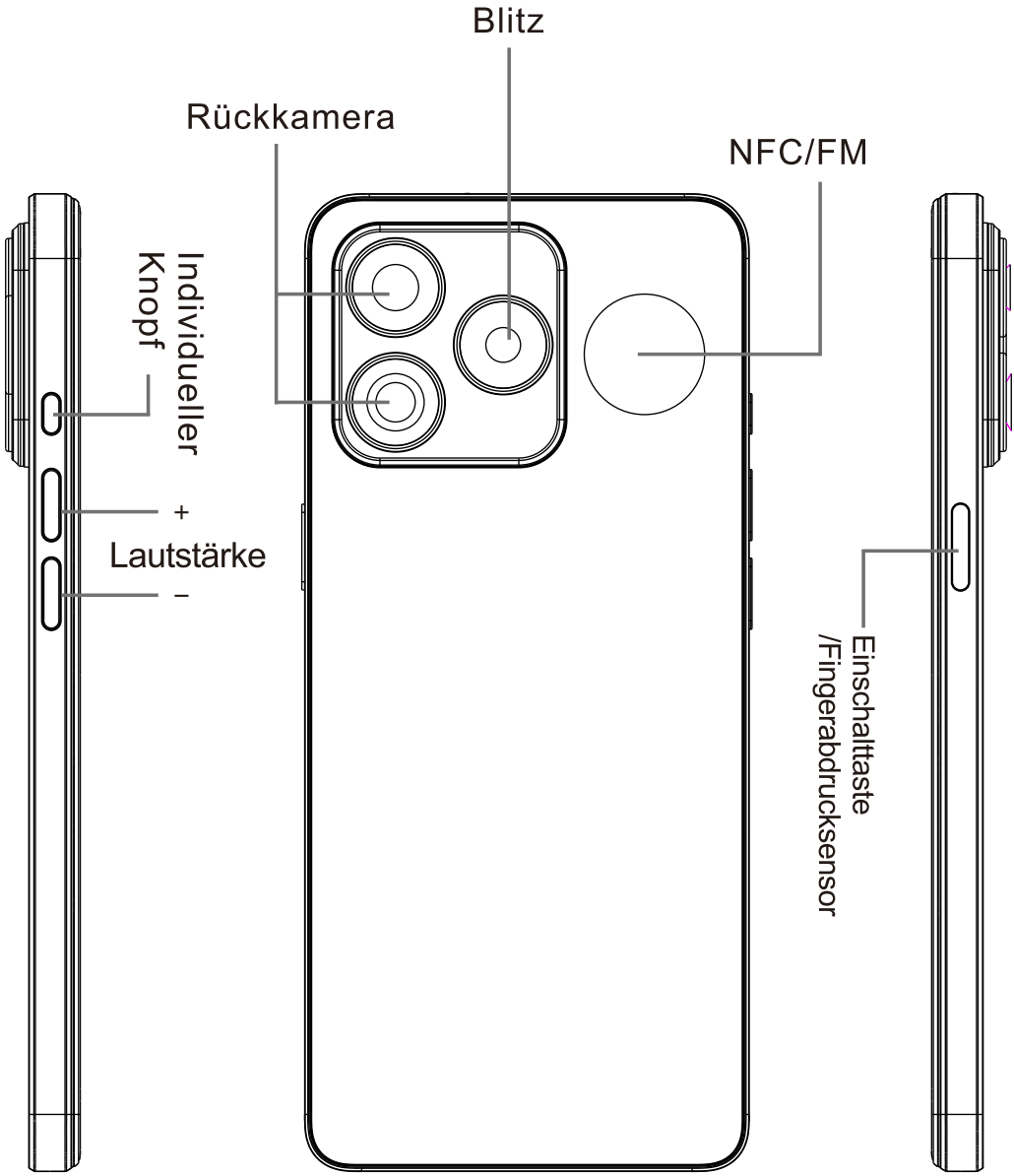
Einschalttaste
/Fingerabdrucksensor
NFC/FM
Blitz
Rückkamera
Individueller
Knopf
+
Lautstärke
–

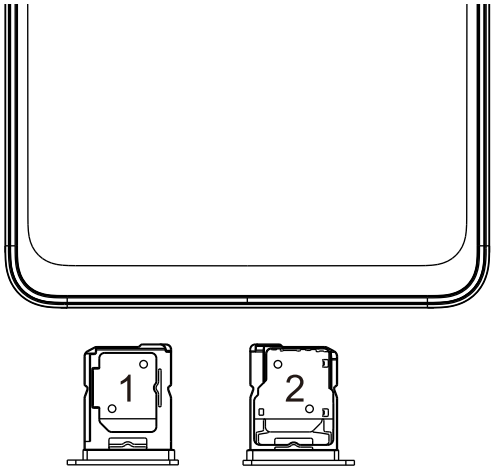

Kartenslot-Spezifikationen:

Kartensteckplatz 1: SIM 1

Kartensteckplatz 2: SIM 2/TF Card

Netzwerkbänder

GSM: B2/3/5/8

WCDMA: B1/2/4/5/6/8/19

CDMA: BC0/BC1/BC10

LTE-FDD: B1/2/3/4/5/7/8/12/13/17/18/19/20/25/26/28A/28B/66

LTE-TDD: B34/38/39/40/41

5G NR Sub6: N1/3/5/8/20/28/38/41/77/78

Gesichts Entsperrung:

Einstellung > Face UnLock

Netzwerkverbindung

WiFi: Einstellung > Netzwerk & Internet > WiFi
Hotspot: Einstellung > Netzwerk & Internet > Hotspot-Tethering

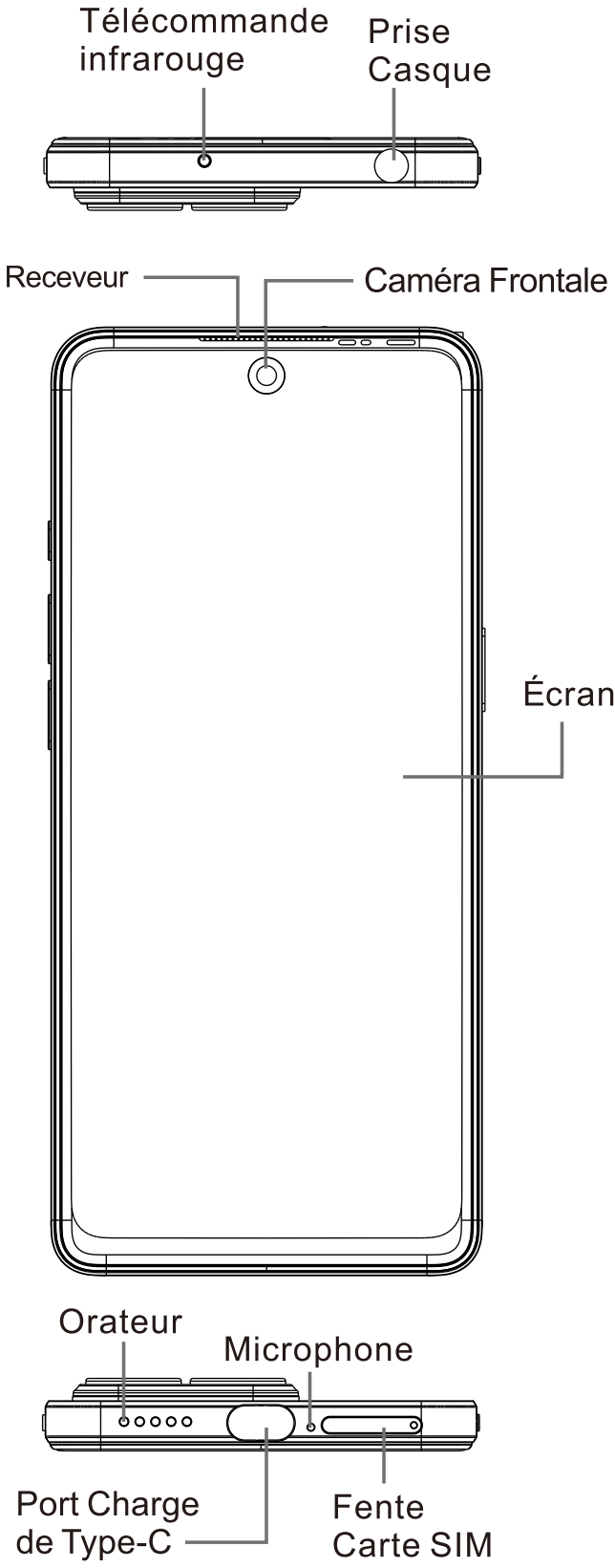
Télécommande infrarouge
Prise Casque
Receveur
Caméra Frontale
Écran
Orateur
Microphone
Port Charge de Type-C
Fente Carte SIM

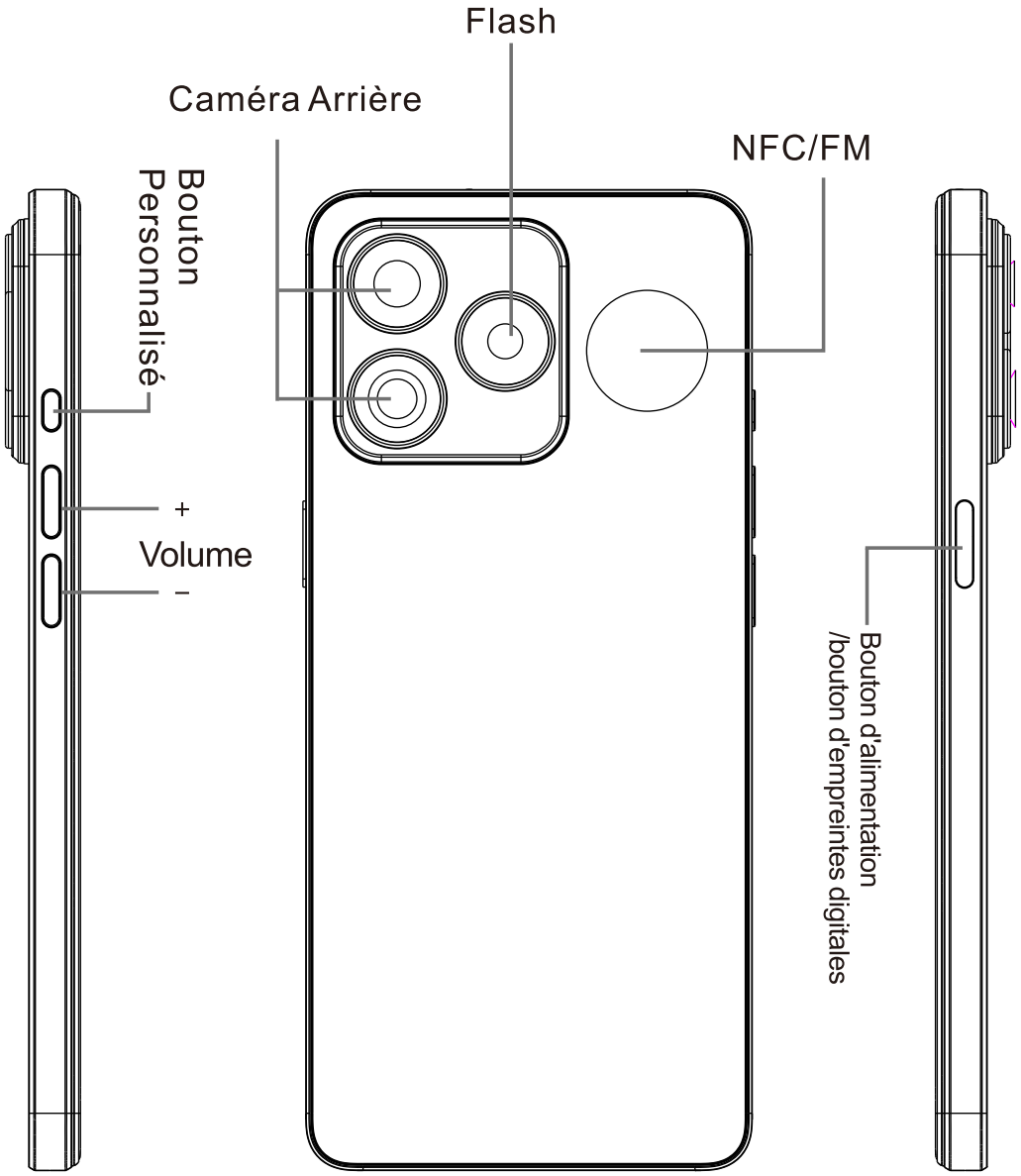
Bouton d'alimentation
/bouton d'empreintes digitales
NFC/FM
Flash
Caméra Arrière
Bouton
Personnalisé
+
Volume
–

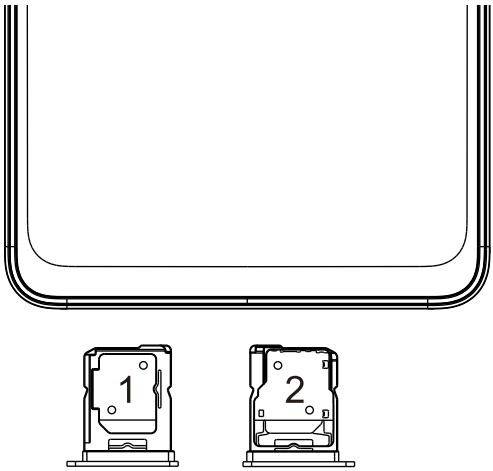

Spécifications de l'emplacement de la carte:

Fente de carte 1: SIM 1

Fente de carte 2: SIM 2/TF Card

Bandes de réseau

GSM: B2/3/5/8

WCDMA: B1/2/4/5/6/8/19

CDMA: BC0/BC1/BC10

LTE-FDD: B1/2/3/4/5/7/8/12/13/17/18/19/20/25/26/28A/28B/66

LTE-TDD: B34/38/39/40/41

5G NR Sub6: N1/3/5/8/20/28/38/41/77/78

Déverrouillage du visage:

Paramétrage> Securité & Location>
Déverrouillage du visage

Connexion réseau

WiFi: Paramétrage> Réseau & Internet> WiFi

Hotspot: Paramétrage> Réseau et Internet>
Hotspot et modem

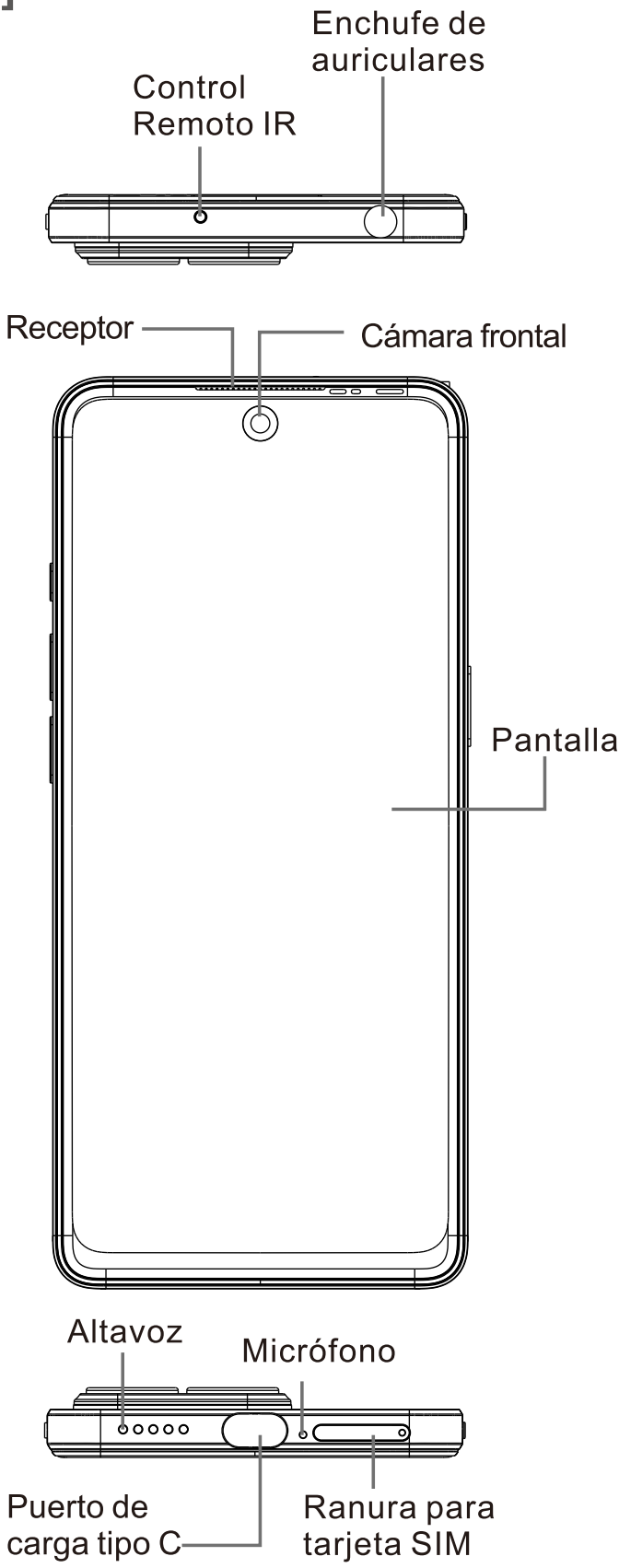
Enchufe de auriculares
Control Remoto IR
Receptor
Cámara frontal
Pantalla
Altavoz
Micrófono
Puerto de carga tipo C
Ranura para tarjeta SIM

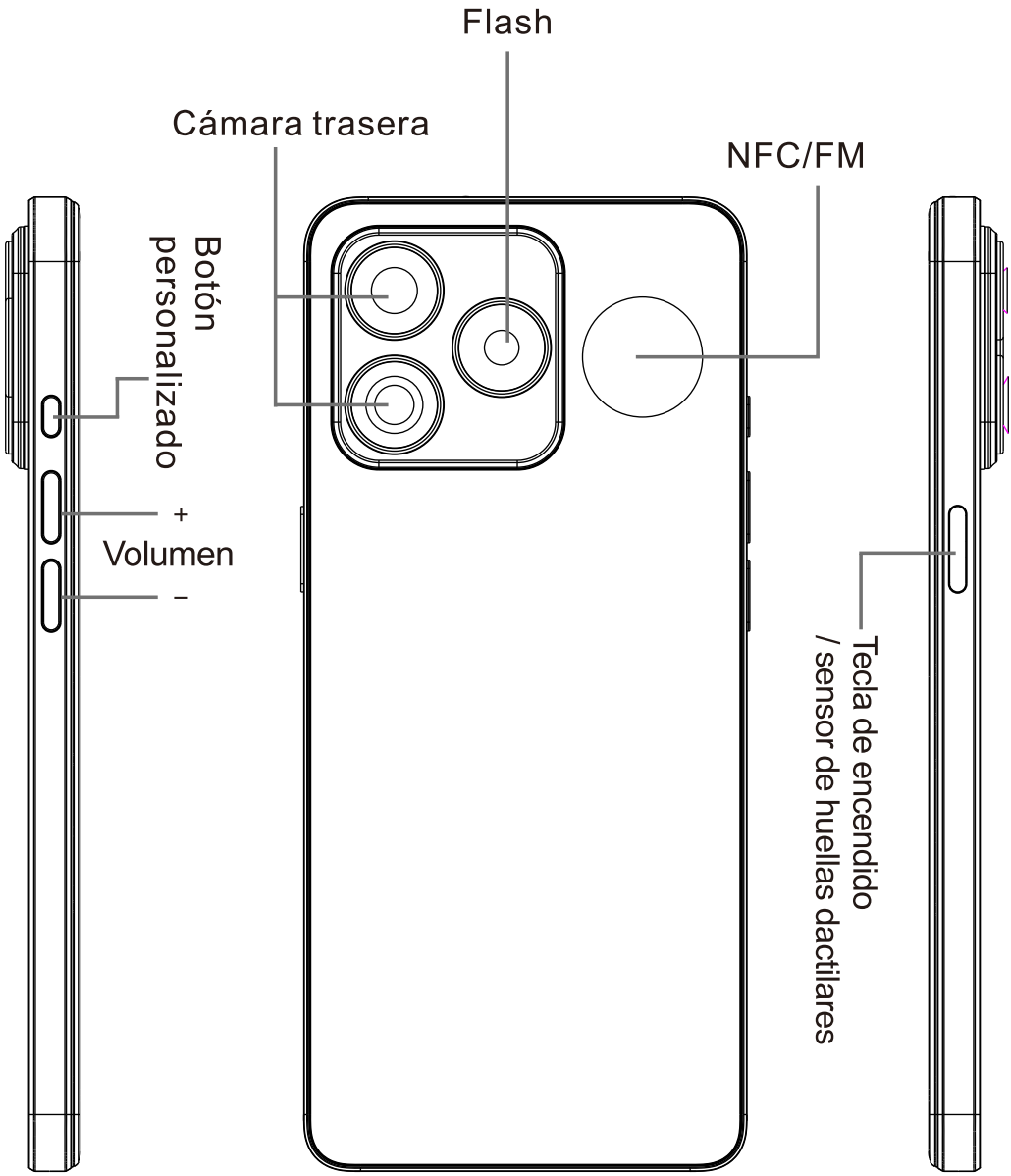
Tecla de encendido
/ sensor de huellas dactilares
NFC/FM
Flash
Cámara trasera
Botón
personalizado
+
Volumen
–

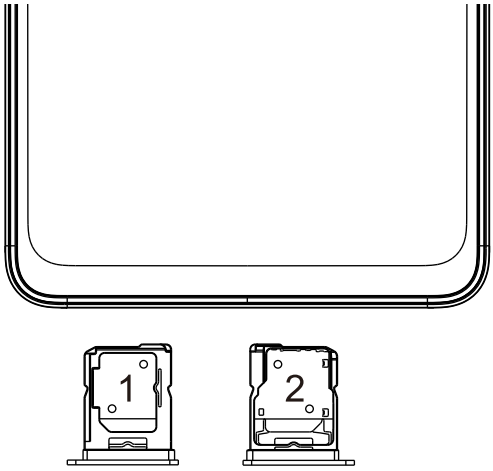

Especificaciones de la Ranura para Tarjetas:

Ranura de tarjeta 1: SIM 1

Ranura de tarjeta 2: SIM 2/TF Card

Bandas de red

GSM: B2/3/5/8

WCDMA: B1/2/4/5/6/8/19

CDMA: BC0/BC1/BC10

LTE-FDD: B1/2/3/4/5/7/8/12/13/17/18/19/20/25/26/28A/28B/66

LTE-TDD: B34/38/39/40/41

5G NR Sub6: N1/3/5/8/20/28/38/41/77/78

Desbloqueo de la cara:

Configuraciones>Desbloqueo de la cara

Conexión de red

WiFi: Configuraciones> Redes e Internet> WiFi

Hotspot: Configuración> Red e Internet>
Hotspot y módem

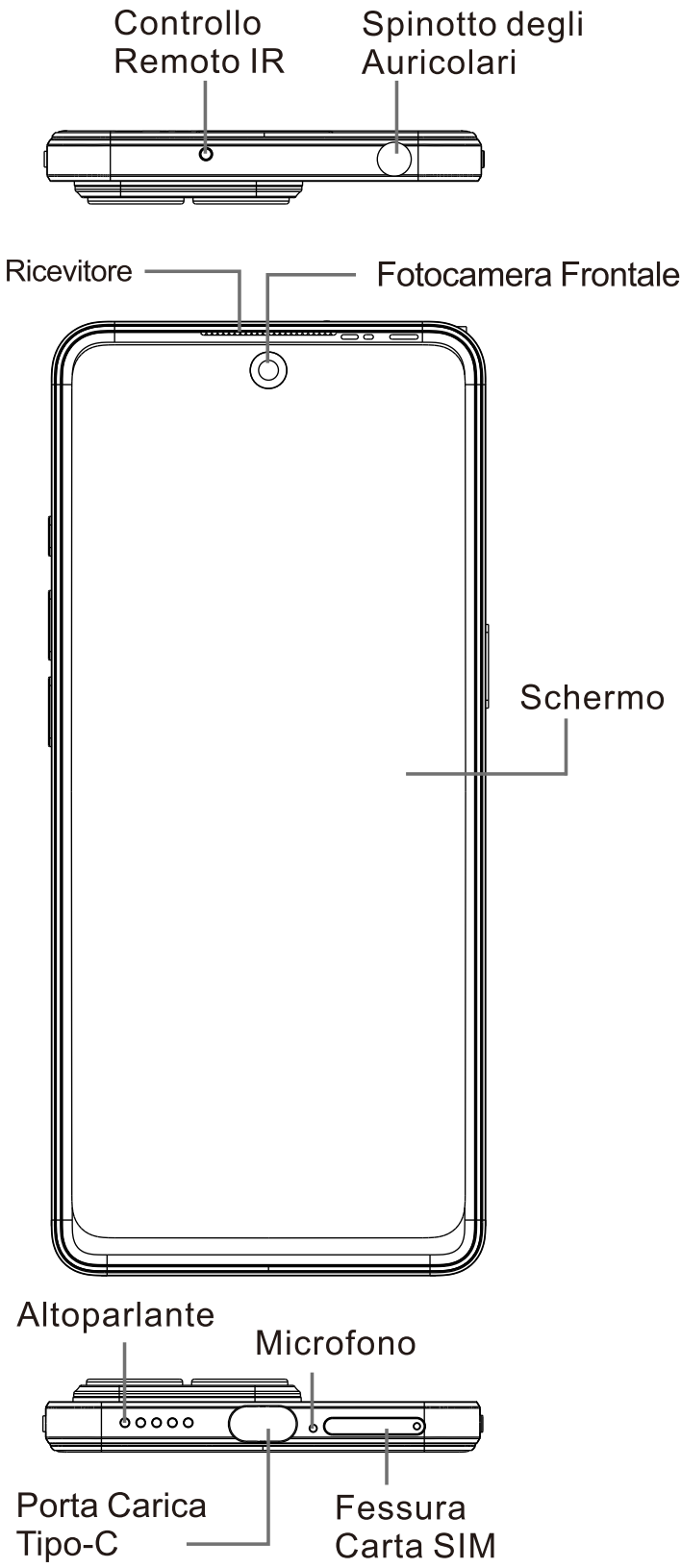
Controllo
Remoto IR
Spinotto degli
Auricolari
Ricevitore
Fotocamera Frontale
Schermo
Altoparlante
Microfono
Porta Carica
Tipo-C
Fessura
Carta SIM

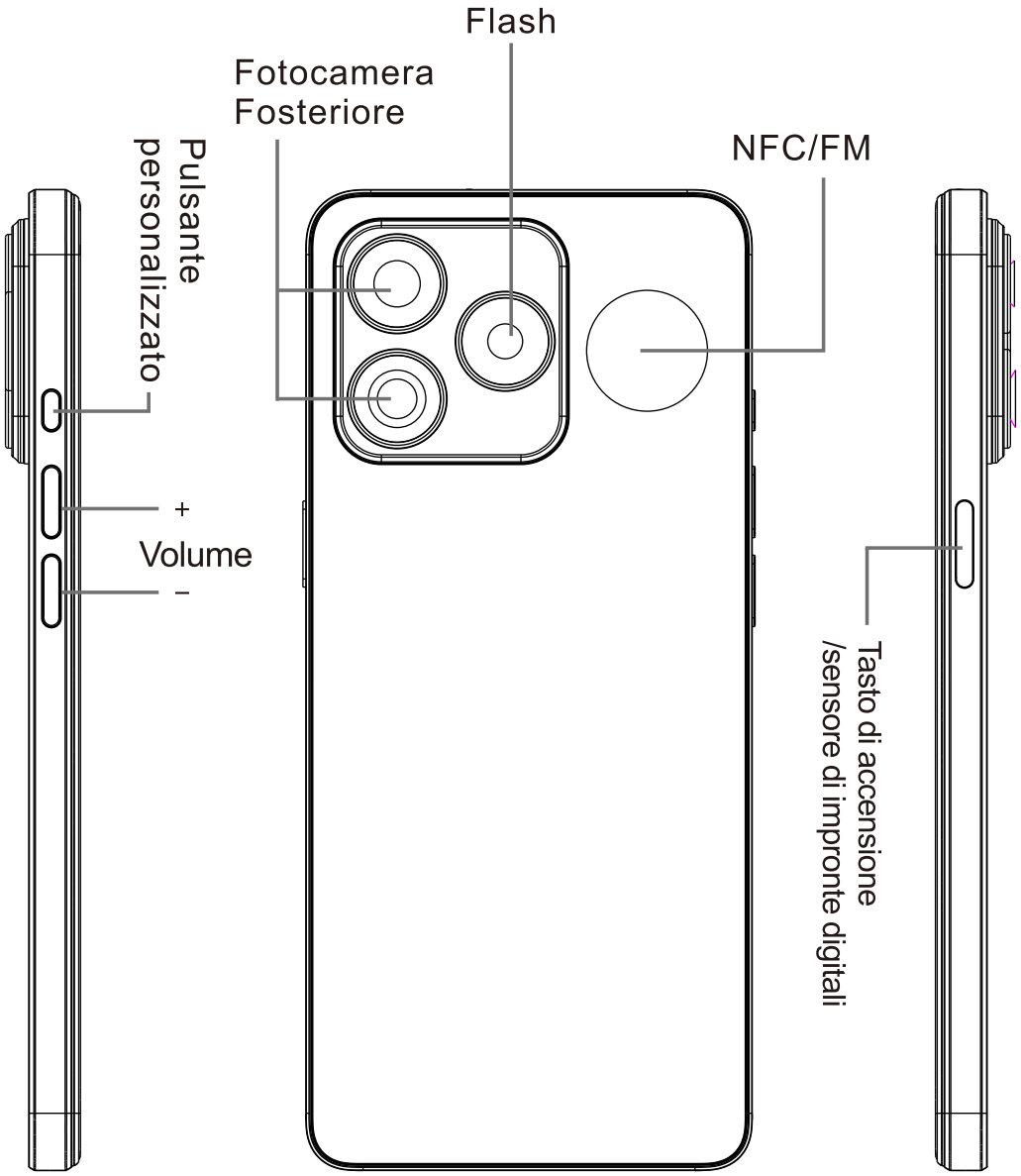
Tasto di accensione
/sensore di impronte digitali
NFC/FM
Flash
Fotocamera
Fosteriore
Pulsante
personalizzato
+
Volume
–

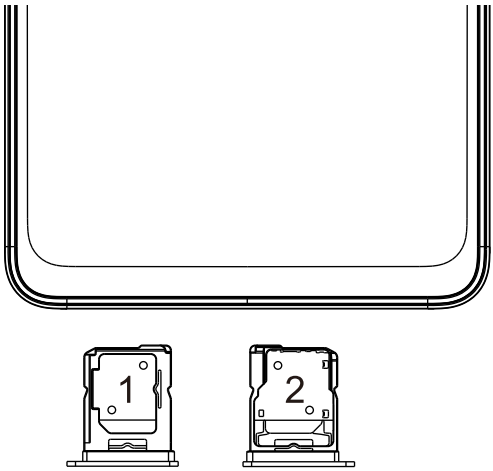

Specifiche dello slot per schede:

Slot per scheda 1: SIM 1

Slot per scheda 2: SIM 2/TF Card

Bande di rete

GSM: B2/3/5/8

WCDMA: B1/2/4/5/6/8/19

CDMA: BC0/BC1/BC10

LTE-FDD: B1/2/3/4/5/7/8/12/13/17/18/19/20/25/26/28A/28B/66

LTE-TDD: B34/38/39/40/41

5G NR Sub6: N1/3/5/8/20/28/38/41/77/78

Sbloccare la faccia:

Impostazioni> Sblocco del viso

Connessione di rete

WiFi: Impostazioni> Rete e Internet> WiFi
Hotspot: Impostazioni> Rete e Internet>
Hotspot e modem

[RU]

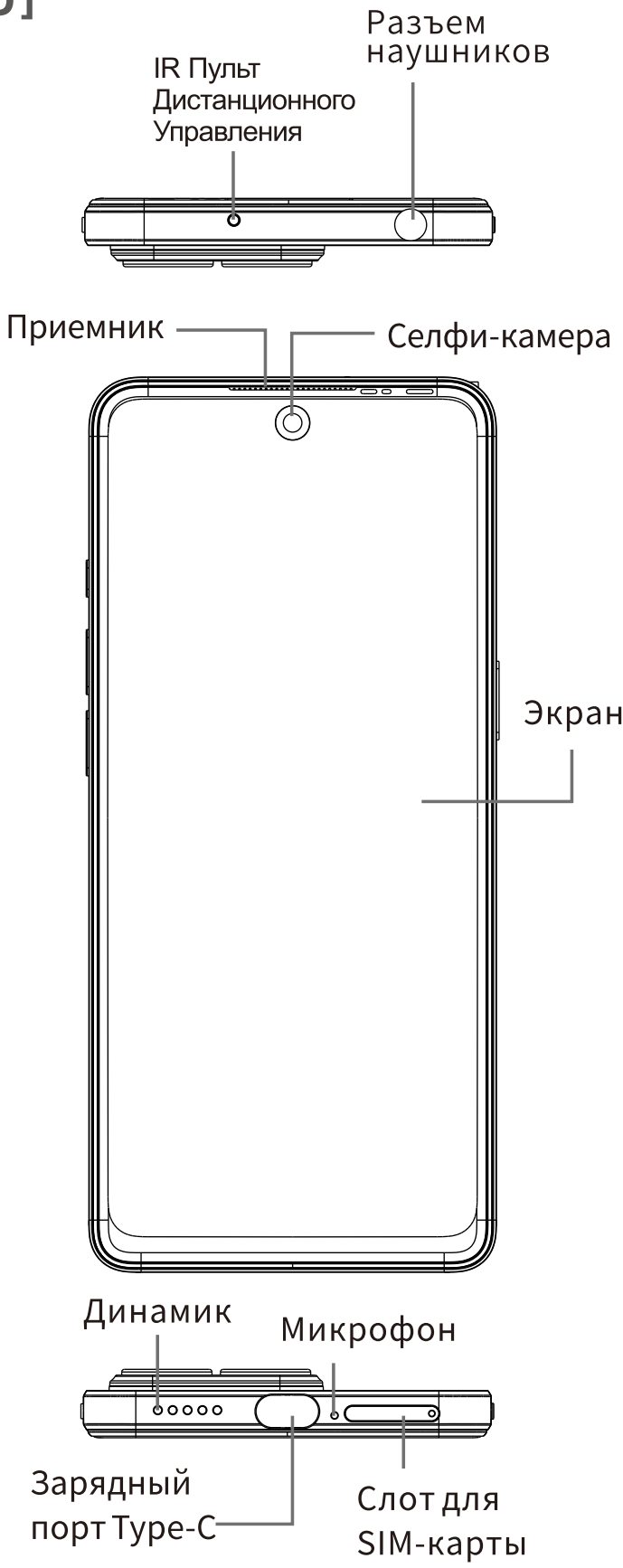
Разъем наушников
IR Пульт Дистанционного Управления
Приемник
Селфи-камера
Экран
Динамик
Микрофон
Зарядный порт Type-C
Слот для SIM-карты

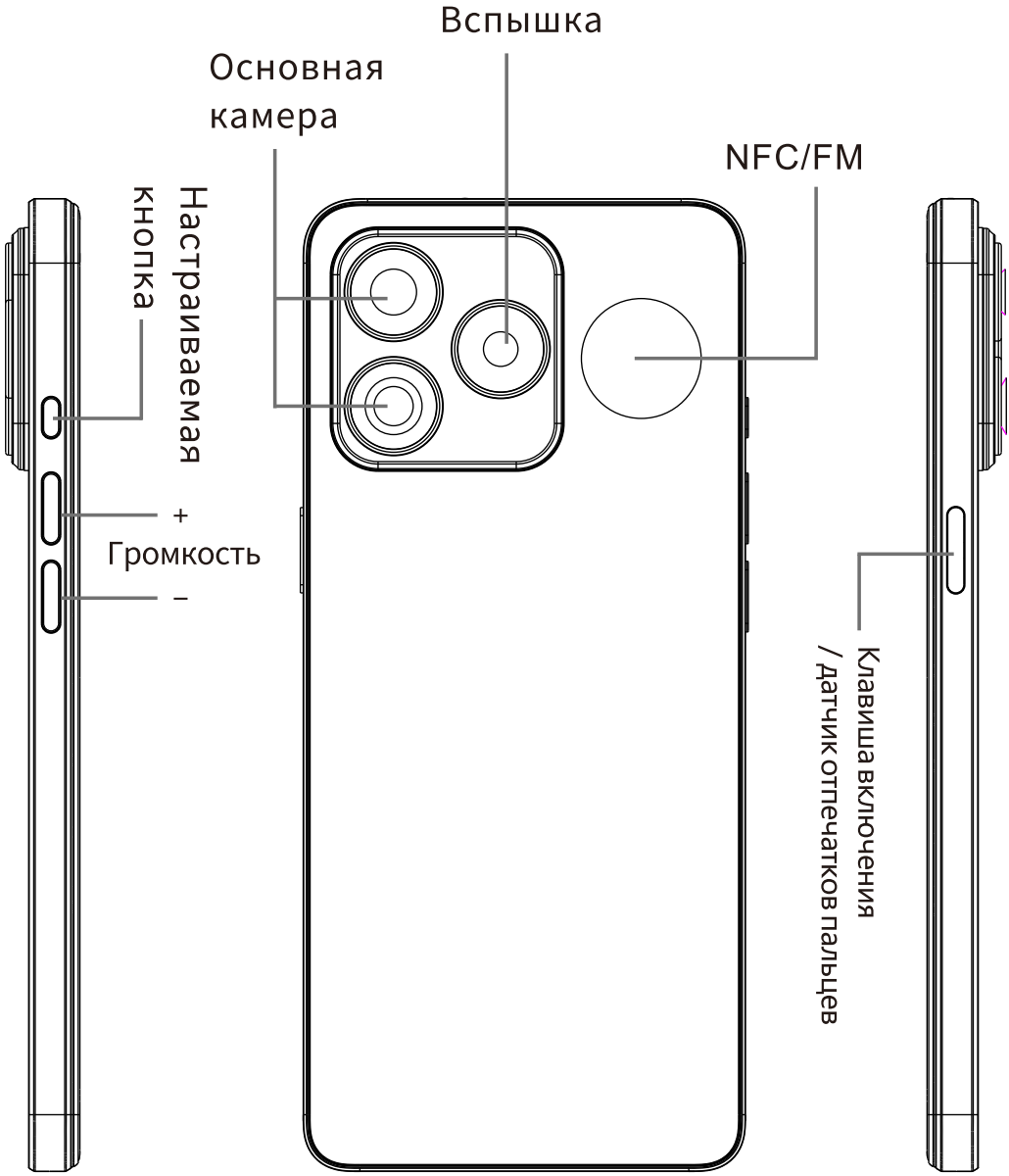
Настраиваемая кнопка
+
Громкость
–
Основная камера
Вспышка
NFC/FM
Клавиша включения / датчик отпечатков пальцев

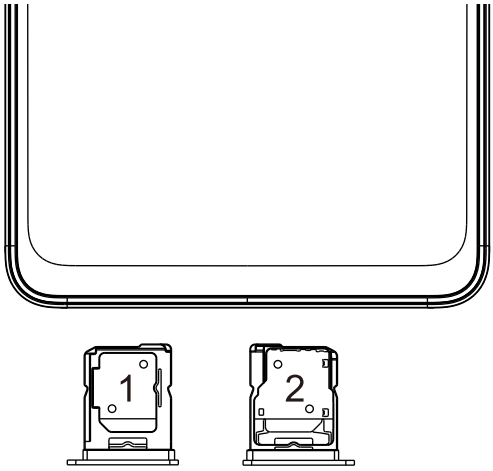

Спецификации слота для карты:

Слот для карты 1: SIM 1

Слот для карты 2: SIM 2/TF Card

Глобальные Диапозоны:

GSM: B2/3/5/8

WCDMA: B1/2/4/5/6/8/19

CDMA: BC0/BC1/BC10

LTE-FDD: B1/2/3/4/5/7/8/12/13/17/18/19/20/25/26/28A/28B/66

LTE-TDD: B34/38/39/40/41

5G NR Sub6: N1/3/5/8/20/28/38/41/77/78

Распознавание Лица:

Настройки>Распознавание Лица

Подключение к сети

WiFi: Настройки>Сети & Интернет>WiFi

Хот-спот: Настройки>Сети & Интернет>
Хот-спот&ограничение

[UA]

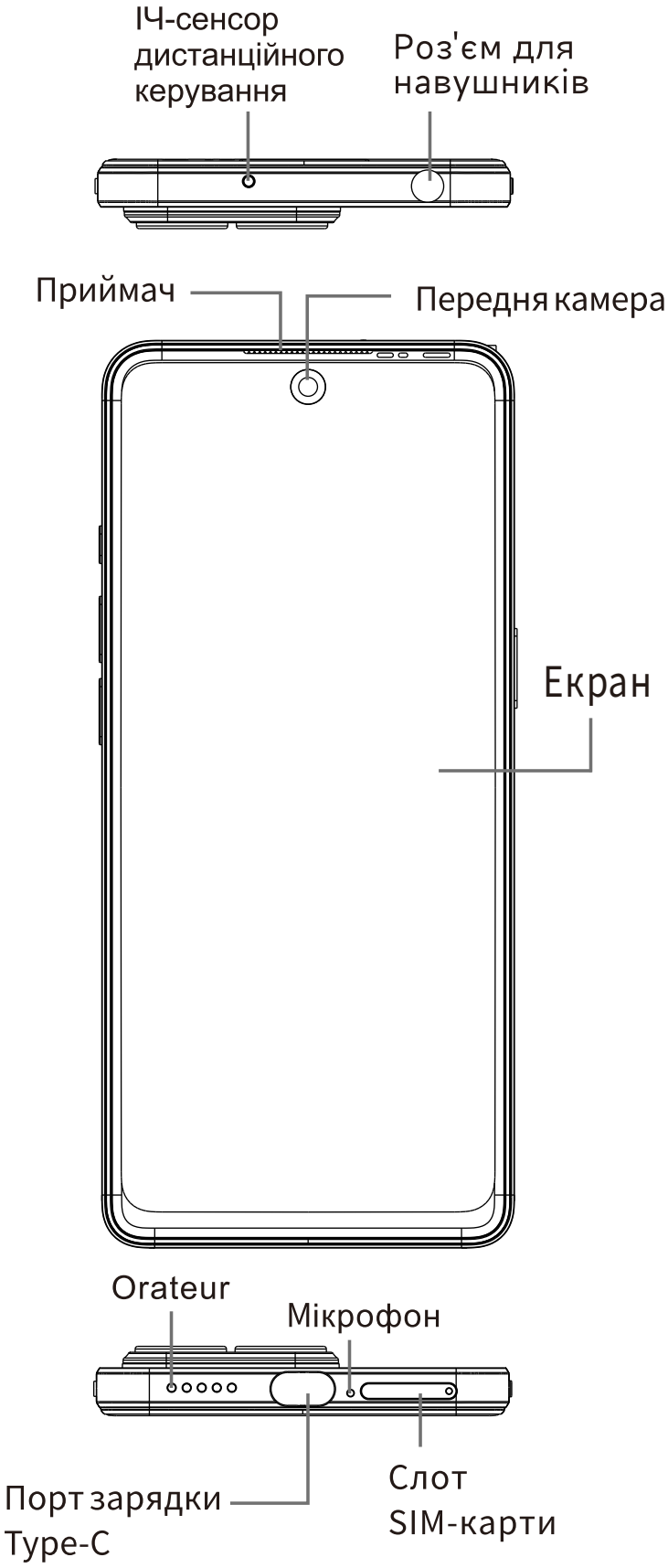
ІЧ-сенсор дистанційного керування
Роз'єм для навушників
Приймач
Передня камера
Екран
Orateur
Мікрофон
Порт зарядки Type-C
Слот SIM-карти

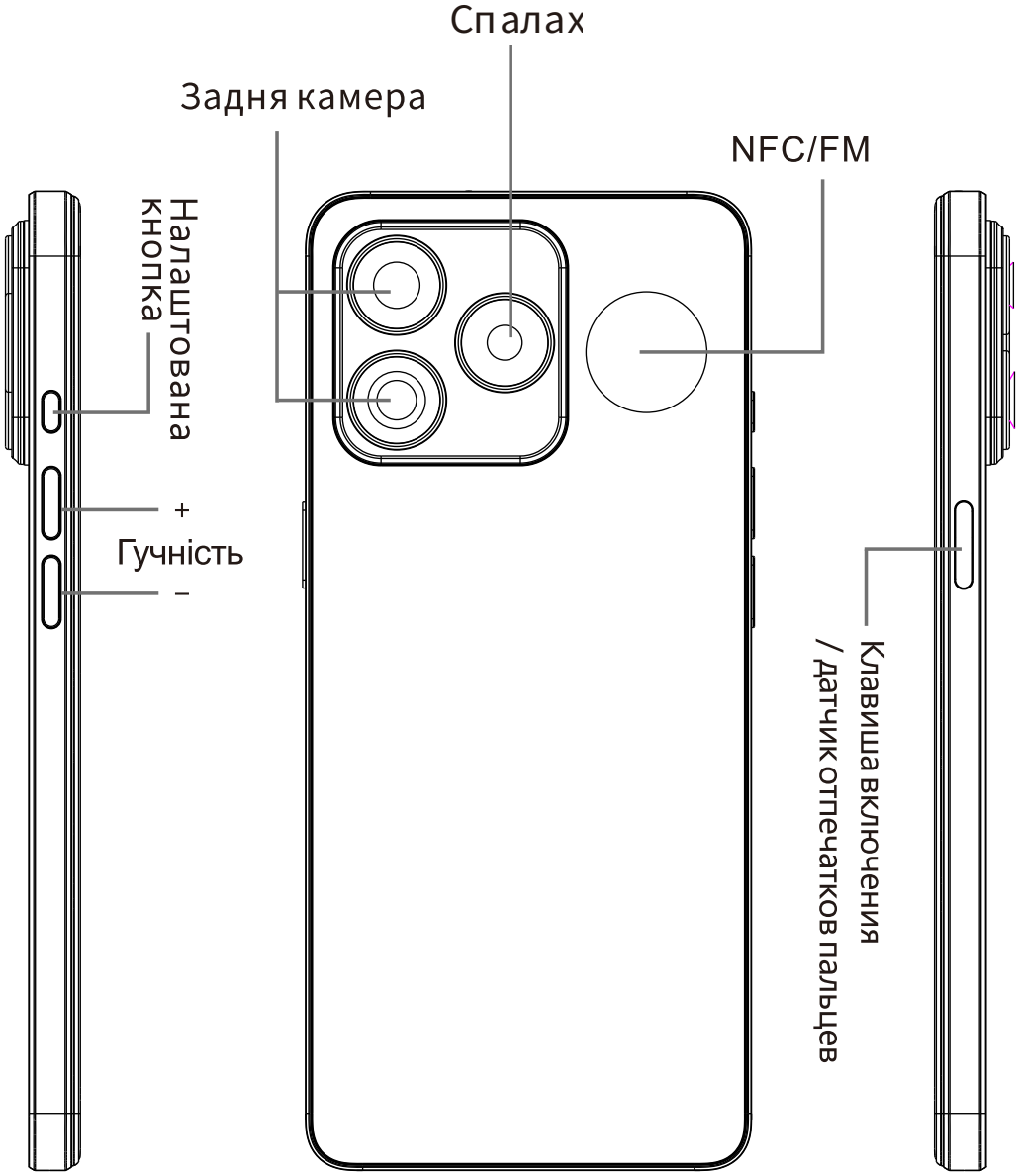
Клавиша включения
/ датчик отпечатков пальцев
NFC/FM
Спалах
Задня камера
Налаштована
кнопка
+
Гучність
–

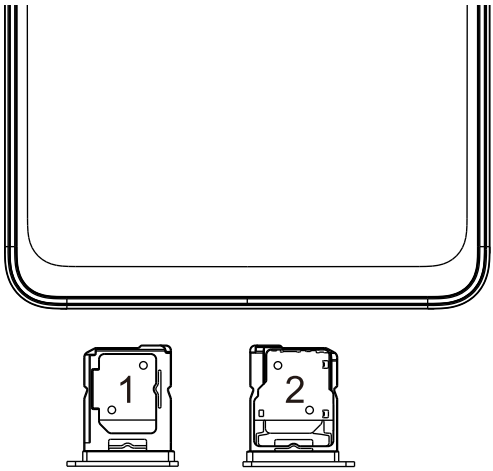

Специфікації слоту для картки:

Слот для картки 1: SIM 1

Слот для картки 2: SIM 2/TF Card

Стандарти мереж, що підтримуються:

GSM: B2/3/5/8

WCDMA: B1/2/4/5/6/8/19

CDMA: BC0/BC1/BC10

LTE-FDD: B1/2/3/4/5/7/8/12/13/17/18/19/20/25/26/28A/28B/66

LTE-TDD: B34/38/39/40/41

5G NR Sub6: N1/3/5/8/20/28/38/41/77/78

Розпізнавання обличчя:

Налаштування> Розпізнавання обличчя

Підключення до мережі:

WiFi: Налаштування>Мережі та інтернет>WiFi

Хот-спот: Налаштування>Мережі та інтернет>

Хот-спот та обмеженя

[JP]

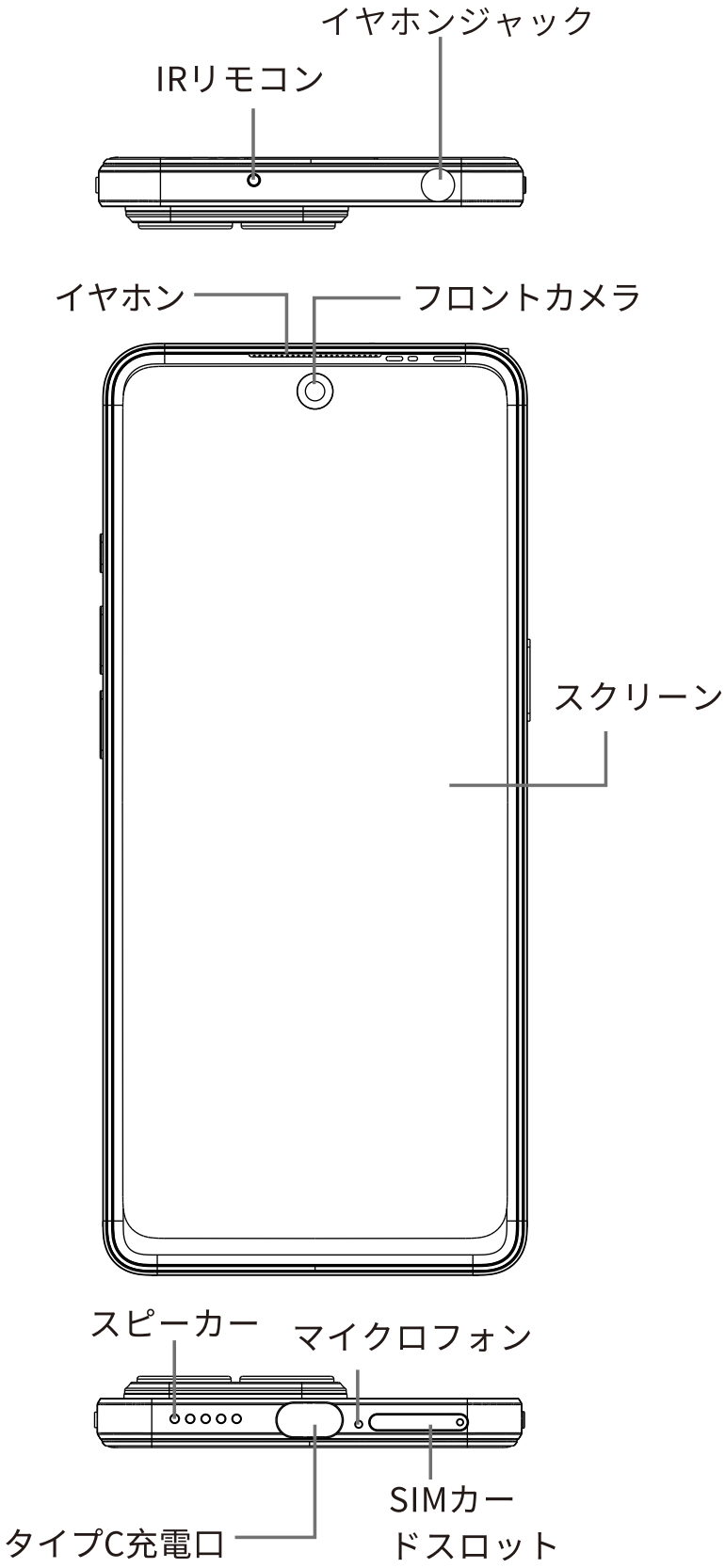
イヤホンジャック
IRリモコン
イヤホン
フロントカメラ
スクリーン
スピーカー
マイクロフォン
SIMカー
ドスロット
タイプC充電口

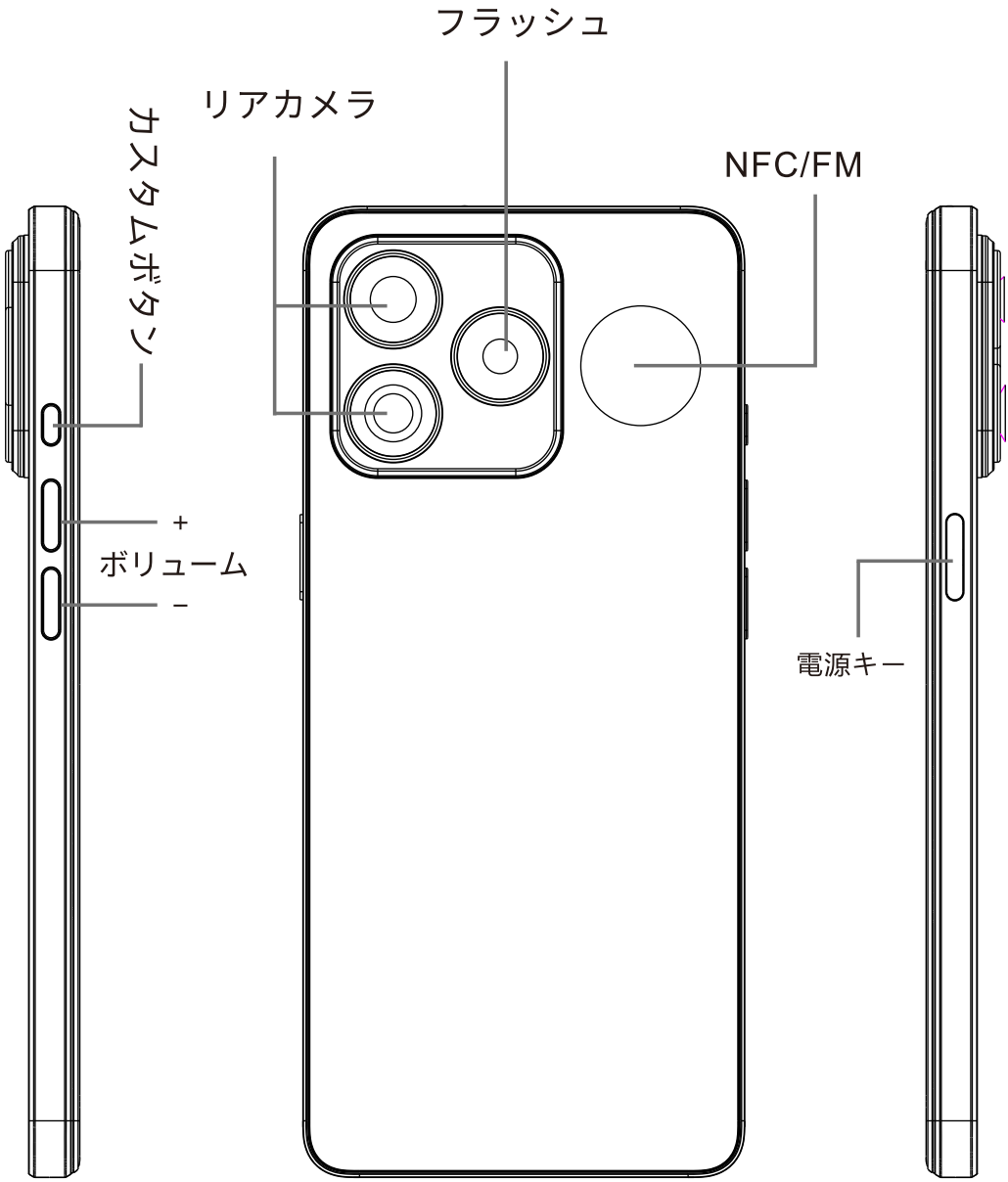
フラッシュ
リアカメラ
カスタムボタン
NFC/FM
+
ボリューム
−
電源キー

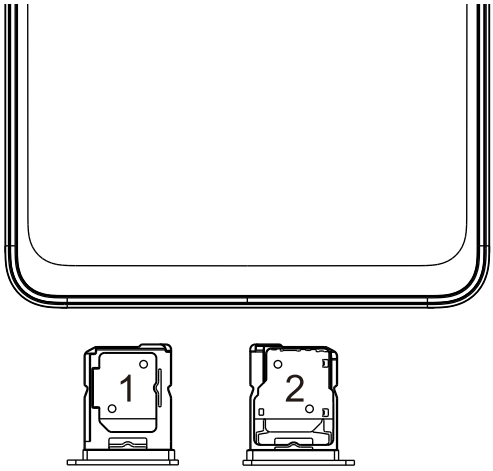

カードスロットの仕様:

カードスロット 1: SIM 1

カードスロット 2: SIM 2/TF Card

ネットワーク帯域

GSM: B2/3/5/8

WCDMA: B1/2/4/5/6/8/19

CDMA: BC0/BC1/BC10

LTE-FDD: B1/2/3/4/5/7/8/12/13/17/18/19/20/25/26/28A/28B/66

LTE-TDD: B34/38/39/40/41

5G NR Sub6: N1/3/5/8/20/28/38/41/77/78

フェイスロック解除：

設定> フェイスロック解除

ネットワーク接続

WiFi >設定>ネットワークとインターネット> WiFi
ホットスポット：設定>ネットワークとインターネット>
ホットスポットとテザリング

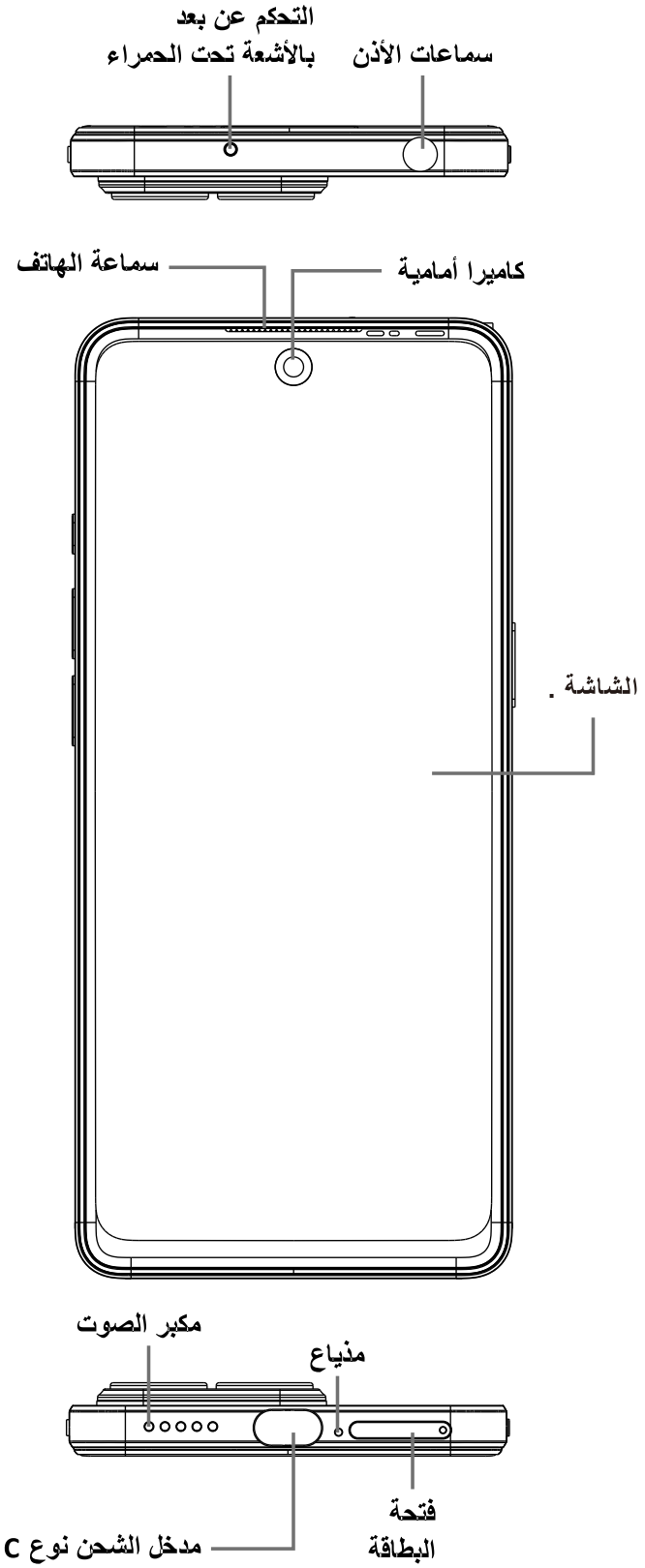
التحكم عن بعد
بالأشعة تحت الحمراء
سماعات الأذن
سماعة الهاتف
كاميرا أمامية
الشاشة .
مكبر الصوت
مذياع
فتحة
البطاقة
مدخل الشحن نوع C

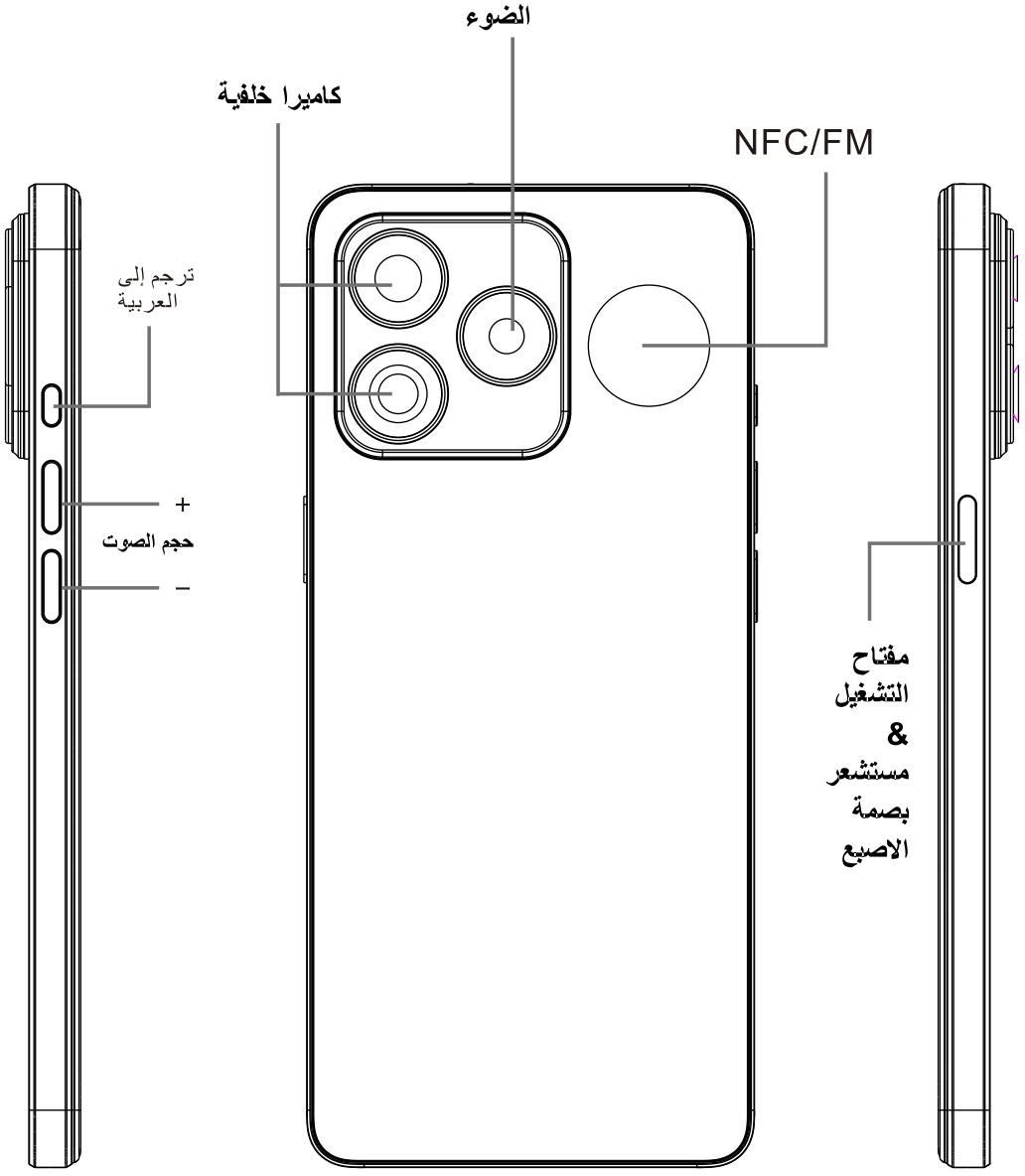
الضوء
كاميرا خلفية
NFC/FM
ترجم إلى
العربية
+
حجم الصوت
–
مفتاح
التشغيل
&
مستشعر
بصمة
الاصبع

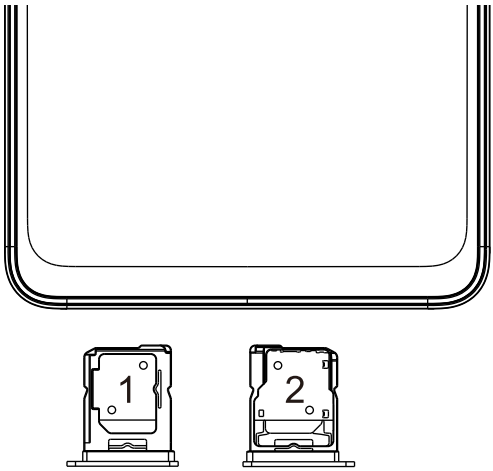

ترجم إلى العربية

فتحة بطاقة1: SIM 1

فتحة بطاقة2: SIM 2/TF Card

روابط الشبكة

GSM: B2/3/5/8

WCDMA: B1/2/4/5/6/8/19

CDMA: BC0/BC1/BC10

LTE-FDD: B1/2/3/4/5/7/8/12/13/17/18/19/20/25/26/28A/28B/66

LTE-TDD: B34/38/39/40/41

5G NR Sub6: N1/3/5/8/20/28/38/41/77/78

فتح القفل عن طريق الوجه

الضبط> فتح القفل عن طريق الوجه

اتصال الشبكة

WiFi > الضبط> الشبكة و الإنترنت> WiFi

ضبط نقطة اتصال > الشبكة والإنترنت > الاتصال والربط

ulefone®
All Rights Reserved

The information contained herein is subject to change without notice. The only warranties for Ulefone products and services are set forth in the express warranty statements accompanying such products and services.

Nothing herein should be construed as constituting an additional warranty. Ulefone shall not be liable for technical or editorial errors or omissions contained herein.

Shenzhen Gotron Electronic CO., LTD.
Address: 7B01 , Building A, Block 1, Anhongji Tianyao Plaza, Longhua District, Shenzhen City, Guangdong Province , China

Service Center
Email : service@ulefone.com

This device complies with part 15 of the FCC rules. Operation is subject to the following two conditions: (1) This device may not cause harmful interference, and (2) this device must accept any interference received, including interference that may cause undesired operation.

15.21 Information to the user.

Any changes or modifications not expressly approved by the party responsible for compliance could void the user's authority to operate the equipment. 15.105 Information for the user.

Note: This equipment has been tested and found to comply with the limits for a Class B digital device, pursuant to part 15 of the FCC rules. These limits are designed to provide reasonable protection against harmful interference in a residential installation. This equipment generates, uses and can radiate radio frequency energy and, if not installed and used in accordance with theinstructions, may cause interference to radio communications. However, there is no guarantee that interference will not occur in a particular installation. If this equipment does cause harmful interference to radio or television reception, which can be determined by turning the equipment off and on, the user is encouraged to try to correct the interference by one or more of the following measures:

- Reorient or relocate the receiving antenna.
- Increase the separation between the equipment and receiver.
- Connecting the equipment to a socket on a circuit different from that to which the receiver is connected.
- Contact with the provider or a radio/TV technician for help.

Specific absorption rate (SAR):

This device meets the government's requirements for exposure to radio

waves. The guidelines are based on standards developed by independent scientific organizations through periodic and thorough evaluation of scientific studies. The standards include a margin of safety designed to ensure the safety of all people regardless of their age or health.

The FCC Statement of Exposure to RF and the SAR limit for the United States (FCC) is 1.6 W/kg average for each gram of tissue. This device was tested for typical operations of use on the body, with the back of the device at 10mm from the body. To maintain compliance with FCC RF exposure requirements, use accessories that maintain a distance of 10mm between the user's body and the back of the device. The use of belt clips, covers and similar accessories must not contain metallic components in their assembly. The use of accessories that do not meet these requirements may not meet FCC RF exposure requirements and should be avoided.

Functioning in the body

This device was tested for typical operations of use in the body. To comply with RF exposure requirements, a minimum separation distance of 10mm must be maintained between the user's body and the telephone, including the antenna. Third-party accessories such as belt clips. covers and similar accessories used with this device should not contain metallic components, accessories that do not meet these RF exposure requirements and should be avoided from use on the body. Use only the supplied antenna or an approved antenna.

Follow us on Facebook