USER'S MANUAL

android POS SYSTEM

PTA0130

3nStar

TABLE OF CONTENTS

- Product Description 4
- Battery Installation 6
- Open the Battery Cover and Remove the Battery 6
- Remove Insulation Strip and Align the Battery 6
- Product SIM Installations 7
- Printing Instructions 9
- Product Operations Guide 9

DISCLAIMER

To ensure the safe and correct use of this product, prevent danger, and avoid damage, please read this manual carefully before using the device and strictly follow the instructions. Check the equipment for any abnormalities before powering it on and using it. Keep this manual properly after reading for future guidance.

Product Description:

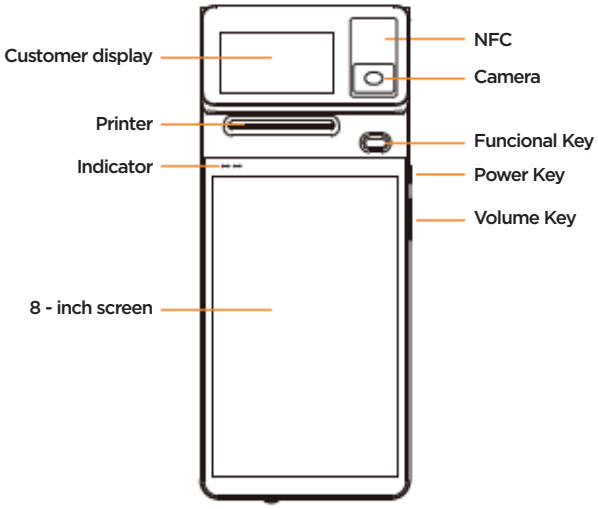

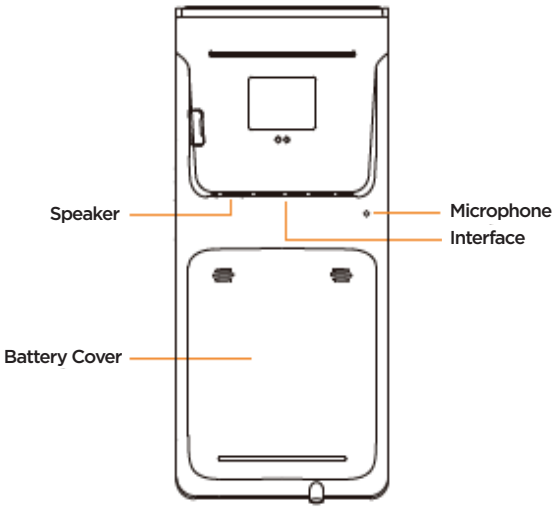

FEATURE	DESCRIPTION
Customer Display	A secondary screen that faces the customer, displaying transaction details or promotional content.
Printer	Integrated device for printing receipts, labels, or other transaction-related documents.
Indicator	LED signal that provides status information, such as power or connectivity status.
Screen	The main 8” touchscreen interface used for interacting with the device, entering data, and navigating menus.
NFC Near Field Communication	Allows the device to communicate wirelessly with other NFC-enabled devices for quick and secure transactions or data exchange.
Camera	Used for scanning barcodes, taking pictures, or other imaging needs for 1D/2D
Functional Key	A customizable button that can be programmed for specific tasks or shortcuts.
Power Key	The button used to turn the device on or off.
Volume Key	Buttons to adjust the audio volume of the device.
Speaker	Outputs sound for notifications, alerts, or other audio functions.
Microphone	Captures audio for voice commands, calls, or other audio input functions.
Battery Cover	The panel that covers and protects the battery compartment, allowing access for battery.
Interface	A port or connector for attaching external devices or peripherals to the main unit.

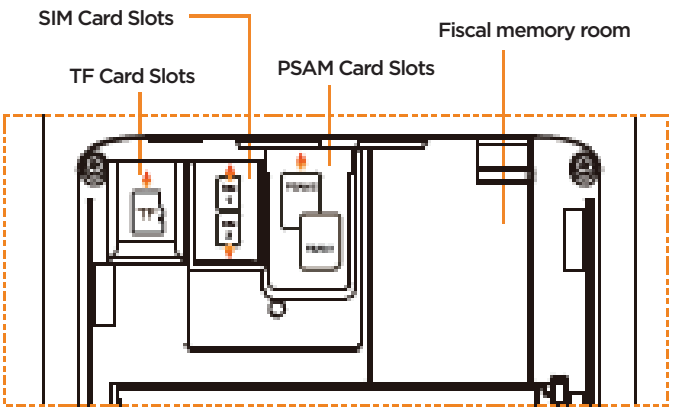

FEATURE	DESCRIPTION
Power On	**Short press:** wake up the screen, lock the screen. **Long press:** long press for 2-3 second in power off mode to switch on the device. Long press for 2-3 seconds in normal operation mode to select power off or reboot.
SIM Card Slots **PSAM Card Slots**	Holds the SIM cards necessary for mobile network connectivity, enabling the device to access cellular services. **Note:** To prevent system error, please make sure the device is turned off when you insert or remove the SIM cards.
TF Card Slots	Accommodates PSAM cards for secure authentication and encryption in payment and security applications and device adding additional storage space. **Note:** To prevent system error, please make sure the device is turned off when you insert or remove the TF card.
Environmental / Material	Operating Temperature: -5c – 45 Storage Temperature: -5c – 60c 1.2 M Anti-Drop
Fiscal Memory Room	Designated space for installing fiscal memory hardware, used for storing financial and transactional data securely

Battery Installation:

Following these steps ensures the battery will be installed correctly and securely in the device.

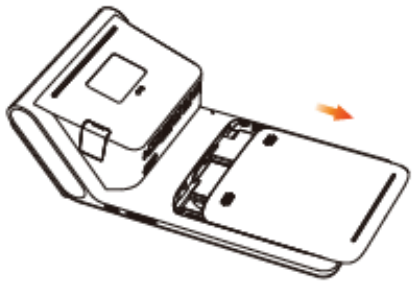

OPEN THE BATTERY COVER AND REMOVE THE BATTERY

Figure 1: Slide the battery cover in the direction of the arrow to open it. Once open, take out the battery from the compartment.

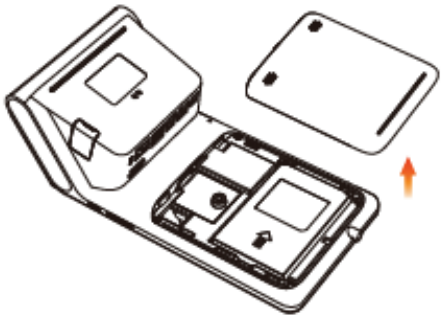

REMOVE INSULATION STRIP AND ALIGN THE BATTERY

Figure 2: Carefully peel off the insulation strip from the battery. Align the golden finger (metal contacts) of the battery with the socket in the housing of the device. Ensure the contacts are correctly positioned to connect with the socket

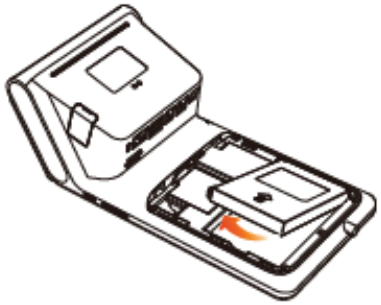

INSERT THE BATTERY AND SECURE IT

Figure 3: Place the battery into the compartment, making sure it fits properly within the designated space. The surrounding frame (bones) acts as a guide to ensure the battery is positioned correctly. Close the battery cover by sliding it back into place

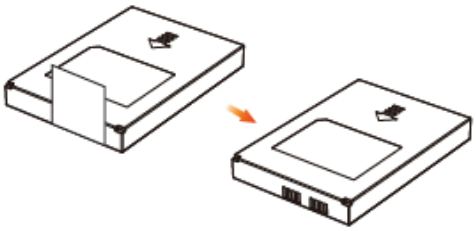

INSERT THE BATTERY

Figure 4: Align the battery with the compartment ensuring the metal contacts are properly matched with the device's socket. Slide the battery into the compartment as shown by the arrow until it fits snugly in place.

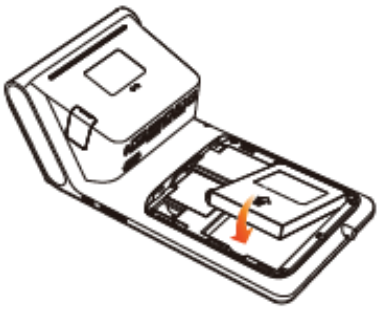

SECURE THE BATTERY

Figure 5: Once the battery is in place, gently press down to ensure it is securely seated. The surrounding frame should hold the battery firmly.

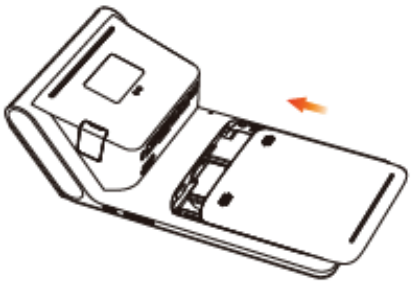

REINSTALL THE BATTERY COVER

Figure 6: Align the battery cover over the compartment. Slide the cover in the direction of the arrow to close it. Ensure it clicks into place, confirming hat it is properly secured.

WARNING This device uses a custom battery. Do not replace it with any other types of batteries. CAUTION: Using an incorrect battery may cause an explosion which can lead to severe injury or death.

Avoid placing the battery in fire or a hot oven, and do not subject it to mechanical shock or crushing, as this can lead to an explosion.

If the battery is not used for an extended period (over 6 months), charge it to 50%-70%, then remove it from the device and store it in an environment with a temperature of 10°C-35°C and 45%-85% relative humidity (RH). It is recommended to recharge the battery every 3 months to prevent damage.

If the device is not used for more than 2 weeks, unplug the battery to prevent overcharging.

Product SIM Installations:

This section provides detailed instructions for powering on the device and installing SIM, PSAM, and TF cards. Follow these steps carefully to ensure proper setup and optimal performance of your device.

Power On

Long press the power key for about 3 seconds.

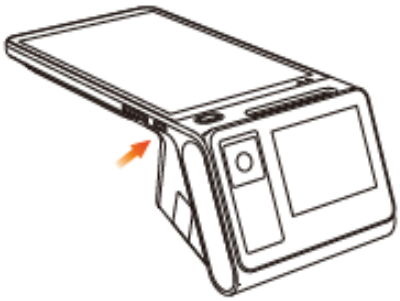

SIM Card, PSAM Card, & TF Card Installation

1. Take out the battery cover, and the card sockets will be shown.
2. Push the card into the socket correctly. Be sure the card is in the right position.

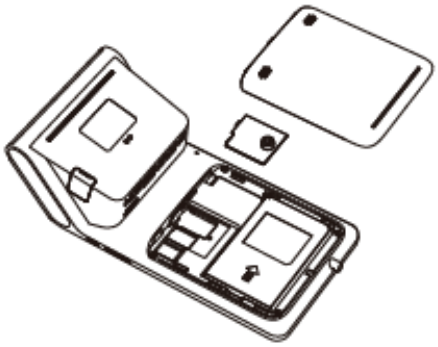

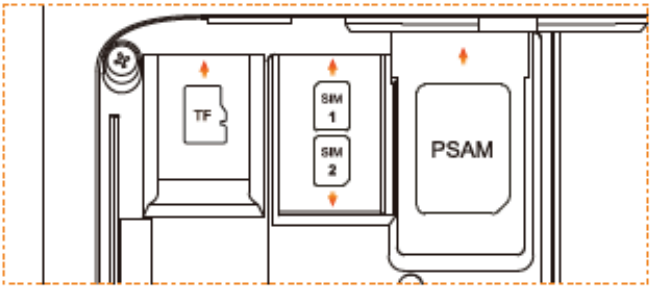

Additional Instructions:

Ensure the card's gold contacts are facing the corresponding contacts in the socket.
Do not force the card into the slot. If it does not fit, check the orientation, and try again.
Replace the battery cover once the card is securely in place.

Printing Instructions:

This device supports 58mm thermal paper with specifications of **57±0.5mm*50mm**

1. Please open the paper container lightly.
2. Feed the paper correctly into the paper container in the direction as shown and pull some paper outside the cutter.
3. Close the cover of the paper container to finish loading the paper.

Note: If the printed paper is blank, please check whether the paper roll has been installed in the correct direction.

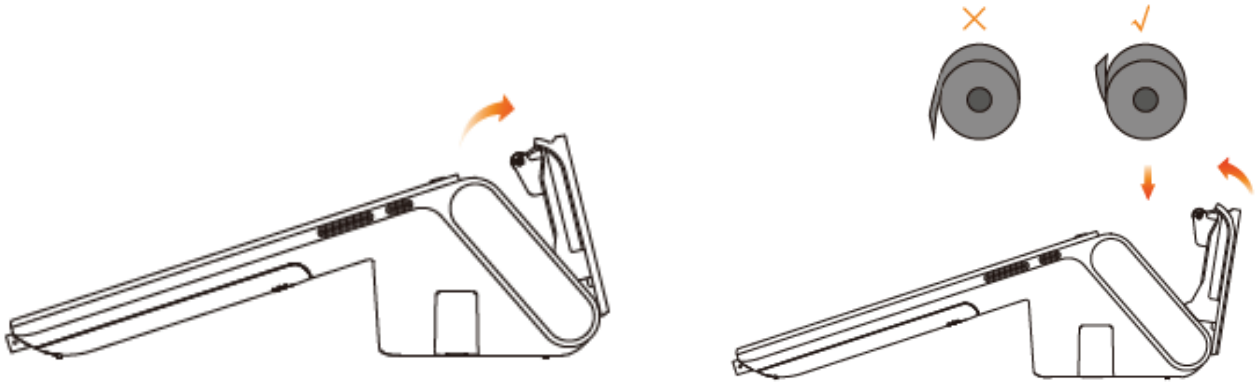

Illustration Guide:

Ensure the paper roll is positioned correctly with the paper feeding from the bottom of the roll.
Follow the direction of the arrows in the illustrations to load the paper properly.

Product Operations Guide:

Card Reading

1. NFC Tag, put the NFC tag over the printer case of the device as shown below.

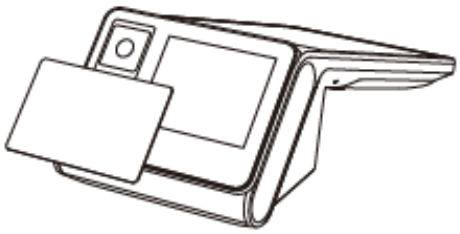

Scan 1D / 2D Code

1. Place the electronic 1D/2D code, as you would with your cellphone, down towards the camera vertical as shown below. Be sure that the 1D/2D code is facing the camera.

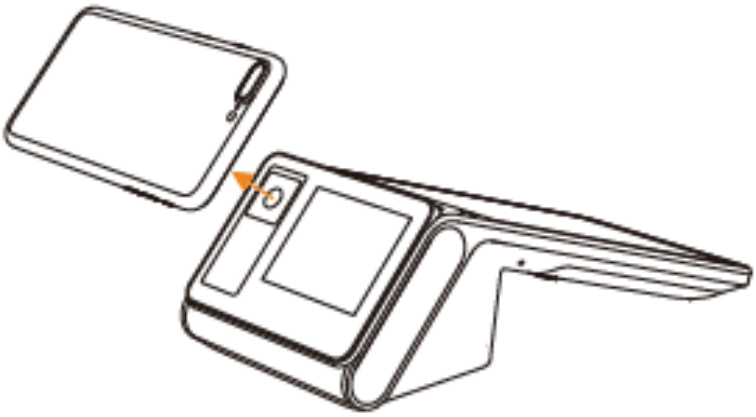

Fiscal Memory Room / Interface Specification

1. Remove the screws from the bottom shell and the bottom lead seal screws.
2. Once the screws are removed, open the back cover to see the memory room.

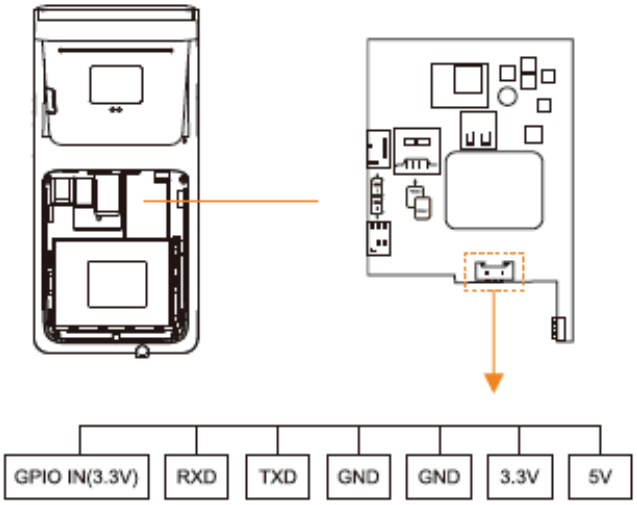

GPIO IN is user-defined and is usually used to detect if the Fiscal Memory is disconnected.

Fiscal Memory Room maximum size: 40mmx31mmx11mm.

Lead Seal Screw Positions

Illustration: The image shows the location of the lead seal screw, which should be removed to access the fiscal memory room.

Removing Screws:

Remove the screws from the bottom shell.

Remove the lead seal screws as indicated in the illustration.

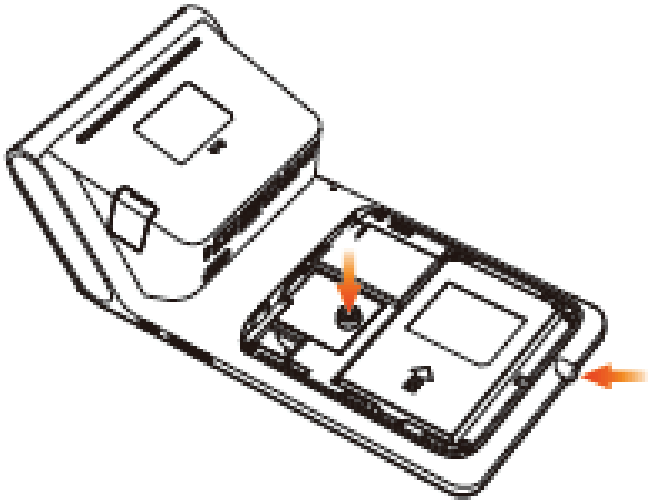

Indicator and Status Logic

Long press the power key for about 3 seconds.

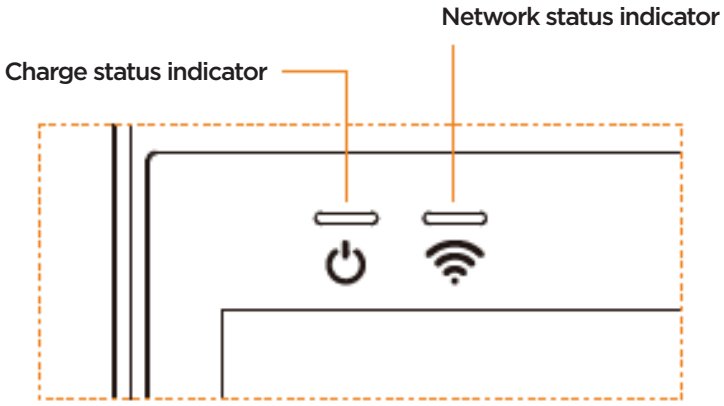

CHARGE STATUS INDICATOR

CHARGE STATUS	INDICATOR LIGHT
Battery Charged	Steady Green Light
Battery Level Warning 10%	Steady Red Light
Charging	Steady Yellow Light

NETWORK STATUS INDICATOR

NETWORK STATUS	INDICATOR LIGHT
Connection to Network Error	Red Light
Networking	Flashing Yellow Light
Networking Connection Successful	Steady Green Light
Data Transfers	Flashing Green Light

ACCESSORIES

ACCESSORIES	QTY
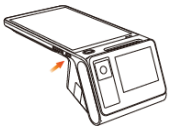 **Main Device**	1
Power Adapter	1
Printer Paper	1
User Guide	1

- Any Changes or modifications not expressly approved by the party responsible for compliance could void the user's authority to operate the equipment.
- This device complies with part 15 of the FCC Rules. Operation is subject to the following two conditions: (1) This device may not cause harmful interference, and (2) this device must accept any interference received, including interference that may cause undesired operation.

  Note: This equipment has been tested and found to comply with the limits for a Class B digital device, pursuant to part 15 of the FCC Rules. These limits are designed to provide reasonable protection against harmful interference in a residential installation. This equipment generates, uses and can radiate radio frequency energy and, if not installed and used in accordance with the instructions, may cause harmful interference to radio communications. However, there is no guarantee that interference will not occur in a particular installation. If this equipment does cause harmful interference to radio or television reception, which can be determined by turning the equipment off and on, the user is encouraged to try to correct the interference by one or more of the following measures:
- Reorient or relocate the receiving antenna.
- Increase the separation between the equipment and receiver.
- Connect the equipment into an outlet on a circuit different from that to which the receiver is connected.
- Consult the dealer or an experienced radio/TV technician for help.
- The device has been tested and comply with FCC SAR limits.

www.3nstar.com

| 3nstar