1LAN-WAP-9332 Access Point

Hardware Installation and Reference Guide

Document Version: V1.0
Date: 2022.12.19
Copyright © 2022

修订日期	修订版本号	修订描述	修订人
2022-12-19	V1.0	首次修订	林志威

1 Product Overview

文档修订记录

修订日期	修订版本号	修订描述	修订人
2022-12-19	V1.0	首次修订	林志威

修订日期	修订版本号	修订描述	修订人
2022-12-19	V1.0	首次修订	林志威

1 Product Overview

1 Product Overview

The 1LAN-WAP-9332 AP is a dual-radio access point compliant with the IEEE 802.11ax standard. The 1LAN-WAP-9332 AP provides a combined data rate of 2.975 Gbps, with up to 575 Mbps in the 2.4 GHz band and 2.4 Gbps in the 5 GHz band. Designed for flexible deployments in the field of education, government, finance and business, the 1LAN-WAP-9332 AP offers one combo port.

1.1 Appearance

The 1LAN-WAP-9332 provides two radio frequency (RF) connectors, one 10/100/1000 BASE-T Ethernet port, one 2.5G SFP port, one Console port and one DC power plug. The AP supports PoE or DC power supply.

Figure 1-1 Appearance

修订日期	修订版本号	修订描述	修订人
2022-12-19	V1.0	首次修订	林志威

1 Product Overview

Figure 1-2 Front Panel

Table 1-1 Front Panel

No.	Item	Description
1	LED	Indicate the operation status of device.

修订日期	修订版本号	修订描述	修订人
2022-12-19	V1.0	首次修订	林志威

1 Product Overview

Figure 1-3 Side View

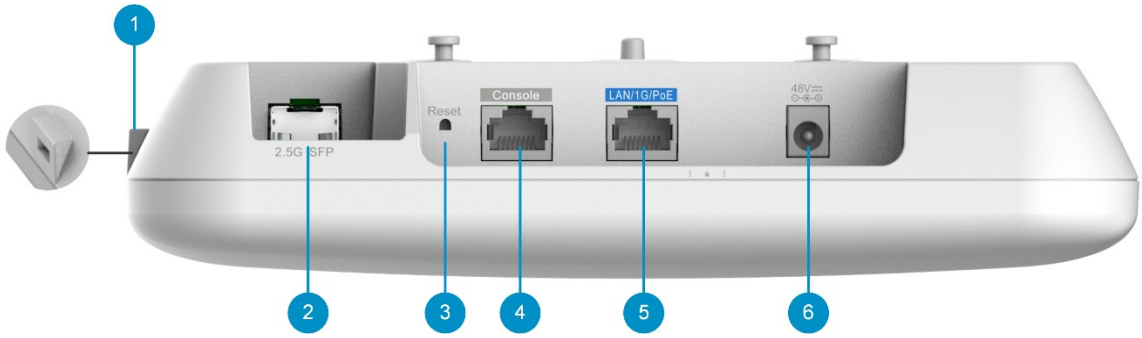

Note

The product nameplate is on the rear panel.

Table 1-2 Side View

No.	Button and Port	Description
1	Anti-theft lock hole	Connect to the anti-theft lock.
2	2.5G SFP port	The uplink SFP port for service data transmission.
3	Reset button	Reboot the device or restore the device to factory settings.
4	Console port	Connect to the device that is managed with the serial cable.
5	LAN/1G/PoE electrical port	The uplink adaptive Ethernet port for service data transmission. Support IEEE 802.3af standard PoE power supply.
6	DC connector	Connect to the DC plug to supply power to the AP.

修订日期	修订版本号	修订描述	修订人
2022-12-19	V1.0	首次修订	林志威

1 Product Overview

1.2 Package Contents

Table 1-3 Package Contents

Item	Quantity
1LAN-WAP-9332 Access Point	1
Mounting Bracket	1
Wall Anchor	2
Phillips Pan Head Screws M4 x 20	4
Warranty Card	1
Installation Guide	1

1.3 Technical Specifications

1.3.1 Size and Weight

Table 1-4 Size and Weight

Item	1LAN-WAP-9332
Main Unit Dimensions (W x H x D)	220 mm × 220 mm × 47 mm (8.74 in. x 8.74 in. x 1.85 in.)
Weight	Main Unit: 0.6 kg (1.32 lbs.) Bracket: 0.2 kg (0.44 lbs.)
Mounting	Ceiling/wall mount capable
Anti-theft Lock	Kensington lock Security screw
Bracket Dimensions (W x H x D)	120 mm×120 mm×8 mm (4.72 in. x 4.72 in. x 0.31 in.)

修订日期	修订版本号	修订描述	修订人
2022-12-19	V1.0	首次修订	林志威

1 Product Overview

Mounting Hole Pattern	53 mm (2.09 in.) x 53 mm (2.09 in.)
Mounting Hole Diameter	6.5 mm (0.26 in.)

1.3.2 RF

Table 1-5 RF

Item	1LAN-WAP-9332
RF Design	Dual-radio Radio1: 2.4 GHz, 2×2 MU-MIMO (2 spatial streams) Radio2: 5 GHz, 2×2 MU-MIMO (2 spatial streams) Combined dual-band:4 spatial streams
Operating Frequency	Radio1: 802.11b/g/n/ax, 2.4 GHz-2.483 GHz Radio2: 802.11a/n/ac/ax, 5.150 GHz-5.350 GHz 802.11a/n/ac/ax, 5.470 GHz-5.725 GHz, 5.725 GHz-5.850 GHz (country-specific restrictions apply)
Max. Data Rate	Radio1: 2.4 GHz, 575 Mbps Radio2: 5 GHz, 2.4 Gbps Combined dual-band: 2.975 Gbps
Antenna Type	Built-in omnidirectional antenna
Antenna Gain	2.4G: Ant1: 4.39dBi, Ant2: 2.75dBi5G: Ant1: 3.62dBi, Ant2: 4.67dBi
Transmit Power Adjustment	Configurable in increments of 1 dBm
Modulation	OFDM: BPSK@6/9Mbps, QPSK@12/18Mbps, 16-QAM@24Mbps,

修订日期	修订版本号	修订描述	修订人
2022-12-19	V1.0	首次修订	林志威

1 Product Overview

	64-QAM@48/54Mbps DSSS: DBPSK@1Mbps, DQPSK@2Mbps, and CCK@5.5/11Mbps MIMO-OFDM: BPSK, QPSK, 16QAM, 64QAM, 256QAM and 1024QAM OFDMA
Receive Sensitivity	11b: -96dBm(1Mbps), -93dBm(5Mbps), -89dBm(11Mbps) 11a/g: -91dBm(6Mbps), -85dBm(24Mbps), -80dBm(36Mbps), -74dBm(54Mbps) 11n: -90dBm@MCS0, -70dBm@MCS7, -89dBm@MCS8, -68dBm@MCS15 11ac: HT20: -88dBm(MCS0), -63dBm(MCS9) 11ac: HT40: -85dBm(MCS0), -60dBm(MCS9) 11ac: HT80: -82dBm(MCS0), -57dBm(MCS9) 11ax: HE80: -82dBm(MCS0), -57dBm(MCS9),-52dBm(MCS11) 11ax: HE160: -77dBm(MCS0), -50dBm(MCS11)

1.3.3 Ports

Table 1-6 Ports

Item	1LAN-WAP-9332
Fixed Service Port	One 10/100/1000 Base-T Ethernet port (IEEE 802.3af-compliant PoE) One 2.5G SFP port (compatible with 1G SFP port)
Fixed Management Port	One RJ45 Console port
LED	One system status LED
Button	One reset button

修订日期	修订版本号	修订描述	修订人
2022-12-19	V1.0	首次修订	林志威

1 Product Overview

1.3.4 Power Supply

Table 1-7 Power Supply

Item	1LAN-WAP-9332
Power Supply	DC power supply: 48 V/0.6 A (Optional. Please refer to Chapter 7.4 for more details.) PoE: IEEE 802.3af-compliant
Max. Power Consumption	12.95 W

1.3.5 Environment and Reliability

Table 1-8 Environment and Reliability

Item	1LAN-WAP-9332
Temperature	Operating: -10°C to 50°C (14°F to 122°F) Storage: -40°C to 70°C (-40°F to 158°F) At a height between 3000 m (9842.52 ft.) to 5000 m (16404.20 ft.) above the sea level, every time the altitude increases by 220 m (721.78 ft.), the maximum temperature decreases by 1°C (1.8°F).
Humidity	Operating: 0% to 95% (RH), non-condensing Storage: 0% to 95% (RH), non-condensing)
IP Rating	IP51
Safety Certifications	GB 4943.1, IEC 62368-1
EMC Certifications	EN 300386, GB/T 19286, GB/T 17618

修订日期	修订版本号	修订描述	修订人
2022-12-19	V1.0	首次修订	林志威

1 Product Overview

1.4 LEDs and Button

Note

- The description of LED status applies to both Fit AP and Fat AP, unless otherwise noted.

Table 1-9 System LED Status

Color	Frequency	Status Description
Off	N/A	The AP is NOT receiving power or the AP is receiving power, but the LED is disabled by software.
Solid green	N/A	Program system initialization is in progress.
Solid red	N/A	The system is in normal operation, but the uplink service port of the AP is down.
Slow blinking red	On for 3s and off for 1s	In Fit AP mode, the establishment of a CAPWAP tunnel between the AP and the AC times out.
Fast blinking blue	On for 0.2s and off for 0.2s	In Fit AP or MACC AP mode, the AP is in the process of software update
Solid blue	N/A	The system and the AP are in normal operation, but no wireless clients are currently online.
Blinking blue	On for 1s and off for 1s	The system and the AP are in normal operation, and at least one wireless client is currently online.
Fast blinking red	On for 0.2s and off for 0.2s	In Fit AP mode, LED location function is enabled to locate a specific AP.

Table 1-10 Fat AP

Button Type	Action	Result
Reset key	Press and hold for less than 2s	Reboot the device.

修订日期	修订版本号	修订描述	修订人
2022-12-19	V1.0	首次修订	林志威

1 Product Overview

Button Type	Action	Result
	Press and hold for more than 5s	Restore default settings.

1.5 SFP Modules

The 2.5G SFP port of the AP supports both copper and fiber links. The negotiation speed may vary with the SFP module type and the speeds on both sides of the link.

Table 1-11 Negotiation Speed When Connected with SFP Port on Peer Device

AP SFP Port Speed	SFP Fiber Module Speed	Negotiation Speed		
		1 Gbps	1 Gbps/10 Gbps/Auto	1 Gbps/2.5 Gbps/10 Gbps/Auto
1 Gbps	3 Gbps	1 Gbps	1 Gbps	1 Gbps
1 Gbps	1 Gbps	1 Gbps	1 Gbps	1 Gbps
2.5 Gbps	3 Gbps	Not supported	Not supported	2.5 Gbps
2.5 Gbps	1 Gbps	Not supported	Not supported	2.5 Gbps

Table 1-12 Negotiation Speed When Connected with Copper Port on Peer Device

AP SFP Port Speed	SFP Copper Module Speed	Negotiation Speed		
		1 Gbps	1 Gbps/10 Gbps/Auto	1 Gbps/2.5 Gbps/10 Gbps/Auto
1 Gbps	2.5 Gbps	Not supported	Not supported	Not supported
1 Gbps	1 Gbps	1 Gbps	1 Gbps	1 Gbps

修订日期	修订版本号	修订描述	修订人
2022-12-19	V1.0	首次修订	林志威

1 Product Overview

2.5 Gbps	2.5 Gbps	Not supported	Not supported	2.5 Gbps
2.5 Gbps	1 Gbps	Not supported	Not supported	Not supported

Caution

- The 2.5G SFP port of the AP does not support speed negotiation. When you use the transceiver module, the speed of the AP, the module, and the port of peer device must be the same.
- The SFP port and copper port can be multiplexed as a combo port. If two ports are connected with cables at the same time, AP will preferentially select the SFP port for data transmission (the copper port is automatically disabled). When the cable of SFP port is unplugged, the copper port is automatically enabled.

2 Preparing for Installation

2.1 Safety Precautions

Note

- To avoid personal injury and device damage, carefully read the safety precautions before you install the device.
- The following safety precautions may not cover all possible dangers.

2.1.1 General Safety Precautions

- Do not expose the AP to high temperature, dusts, or harmful gases.
- Do not install the AP in an inflammable or explosive environment.
- Keep the AP away from EMI sources such as large radar stations, radio stations, and substations.
- Do not subject the AP to unstable voltage, vibration, and noises.
- The installation site should be free from water flooding, seepage, dripping, or condensation. The installation site should be selected according to network planning and communications equipment features, and considerations such as climate, hydrology, geology, earthquake, electrical power, and transportation.
- Keep the AP at least 500 meters away from the ocean and do not face it towards the sea breeze.
- Do not place the device in walking areas.
- During the installation and maintenance, do not wear loose clothes, ornaments, or any other things that may be hooked by the chassis.
- Keep tools and components away from walking areas.

2.1.2 Handling Safety

- Prevent the device from being frequently handled.
- Cut off all the power supplies and unplug all power cords before moving or handling the device.

2.1.3 Electric Safety

Warning

- Improper or incorrect electric operations may cause a fire, electric shock, and other accidents, and lead to severe and fatal personal injury and device damage.
- Direct or indirect contact with high voltage or mains power supply via wet objects may cause fatal dangers.

- Observe local regulations and specifications during electric operations. Only personnel with relevant qualifications can perform such operations.
- Check whether there are potential risks in the work area. For example, check whether the power supply is grounded, whether the grounding is reliable, and whether the ground is wet.

- Learn about the position of the indoor emergency power switch before installation. Cut off the power switch in case of accidents.
- Check the device carefully before shutting down the power supply.
- Do not place the device in a damp/wet location. Do not let any liquid enter the chassis.
- Keep the device far away from grounding or lightning protection devices for power equipment.
- Keep the device away from radio stations, radar stations, high-frequency high-current devices, and microwave ovens.

2.1.4 Storage Safety

To ensure the normal operation of the device, maintain an appropriate temperature and humidity in the storage room. Please comply with the storage temperature and humidity requirements demonstrated in the device specifications.

Caution

If the device has been stored for more than 18 months, please power on the device and keep it running for 24 hours to activate the device.

2.2 Installation Environment Requirements

Install the device indoors to ensure its normal operation and prolonged service life.

The installation site must meet the following requirements.

2.2.1 Bearing Requirements

Evaluate the weight of the device and its accessories (for example, the bracket and power supply modules), and ensure that the ground of the installation site meets the requirements.

2.2.2 Ventilation Requirements

Reserve sufficient space in front of the air vents to ensure normal heat dissipation. After various cables are connected, bundle the cables or place them in the cable management bracket to avoid blocking air inlets.

2.2.3 Space Requirement

Maintain a minimum clearance of 0.4 cm (15.75 in.) around the device to ensure proper cooling and ventilation.

2.2.4 Temperature/Humidity Requirements

To ensure the normal operation and prolonged service life of the device, maintain an appropriate temperature and humidity in the equipment room.

The equipment room with too high or too low temperature and humidity for a long period may damage the device.

- In an environment with high humidity, the insulating material may have poor insulation or even leak electricity.
- In an environment with low humidity, the insulating strip may dry and shrink, loosening screws.
- In a dry environment, static electricity is prone to occur and damage the internal circuits of the device.

- Too high temperatures can accelerate the aging of insulation materials, greatly reducing the reliability of the device and severely affecting its service life.

Note

The ambient temperature and humidity of the device are measured at the point that is 1.5 m (59.06 in.) above the floor and 0.4 m (15.75 in.) before the device when there is no protective plate in front or at the back of the device.

2.2.5 Cleanliness Requirements

Dust poses a major threat to the device. The indoor dust takes on a positive or negative static electric charge when falling on the device, causing poor contact of the metallic joint. Such electrostatic adhesion may occur more easily when the relative humidity is low, not only affecting the service life of the device, but also causing communication faults. Table 2-1 describes the requirements for the dust content and granularity in the equipment room.

Table 2-1 Requirements for Dust

Dust	Unit	Content
Dust particles (diameter ≤ 0.5 μm)	Particles/m^3	≤1.4×10^7
Dust particles (0.5 μm ≤ diameter ≤ 1 μm)	Particles/m^3	≤7×10^5
Dust particles (1 μm ≤ diameter ≤ 3 μm)	Particles/m^3	≤2.4×10^5
Dust particles (3 μm ≤ diameter ≤ 1 μm)	Particles/m^3	≤1.3×10^5

Apart from dust, the salt, acid, and sulfide in the air in the equipment room must meet strict requirements. These harmful substances will accelerate metal corrosion and component aging. Therefore, the equipment room should be properly protected against the intrusion of harmful gases, such as sulfur dioxide, hydrogen sulfide, nitrogen dioxide, and chlorine gas. Table 2-2 lists limit values for harmful gases.

Table 2-2 Requirements for Gases

Gas	Average (mg/m^3)	Maximum (mg/m^3)
Sulfur dioxide (SO_2)	0.2	1.5
Hydrogen sulfide (HS)	0.006	0.03
Nitrogen dioxide (NO_2)	0.04	0.15
Ammonia gas (NH_3)	0.05	0.15
Chlorine gas (Cl_2)	0.01	0.3

Note

Average refers to the average value of harmful gases measured in one week. **Maximum** refers to the upper limit of harmful gases measured in one week, and the maximum value lasts up to 30 minutes every day.

2.2.6 Anti-interference Requirements

- Take interference prevention measures for the power supply system.
- Keep the device away from the grounding equipment or lightning and grounding equipment of the power device as much as possible.
- Keep the device far away from high-frequency current devices such as high-power radio transmitting station and radar launcher.
- Take electromagnetic shielding measures when necessary.

2.2.7 Lightning Protection Requirements

The device can guard against lightning strikes. As an electric device, it may still be damaged by strong lightning strikes. Take the following lightning protection measures:

- Ensure that the neutral point of the AC power socket is in good contact with the ground.
- You are advised to install a power lightning arrester in front of the power input end to enhance the lightning prevention for the power supply.

2.2.8 Installation Site Requirements

Regardless of whether the device is installed on the wall or ceiling, the following conditions must be met:

- Maintain a minimum clearance of 0.4 cm (15.75 in.) around the device to ensure proper cooling and ventilation.
- The installation site allows for proper cooling and ventilation. You are advised to install an air conditioner if you want to install the device in a hot area.
- The installation side is sturdy enough to support the weight of the device and its accessories.

2.3 Tools

Table 2-3 Tools

Common Tools	Phillips screwdrivers, wires, Ethernet cable, fastening bolts, diagonal pliers, and binding straps
Special Tools	Antistatic gloves, wire stripper, crimping pliers, crystal connector crimping pliers, and wire cutter
Meter	Multimeter, and bit error rate tester (BERT)
Relevant Devices	PC, display, and keyboard

Note

The device is delivered without a tool kit. The tool kit and cables are customer-supplied.

3 Installing the Access Point

The 1LAN-WAP-9332 AP must be fixed and installed indoors.

Caution

Before installing the device, make sure you have carefully read the requirements described in Chapter 2.

3.1 Installation Flowchart

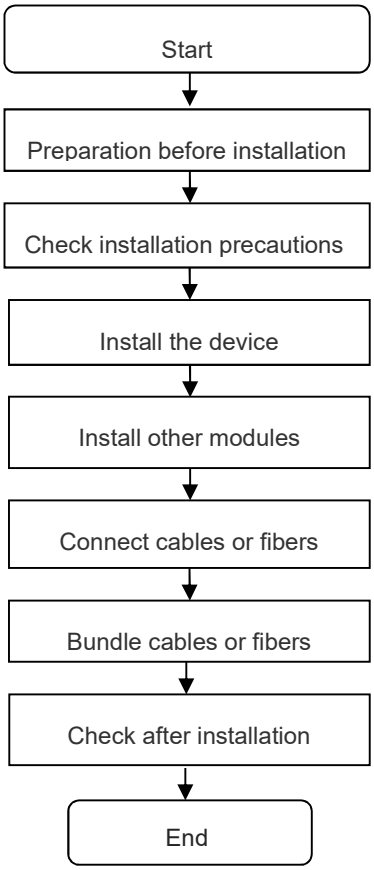

3.2 Before You Begin

Before you install the device, verify that all the parts in the package contents are there and make sure that:

- The installation position provides sufficient space for heat dissipation.
- The installation position meets the temperature and humidity requirements of the device.
- The power supply and required current are available in the installation position.
- The Ethernet cable have been deployed in the installation position.
- The selected power supply modules meet the system power requirements.

- The position of the indoor emergency power switch is learned before installation. The power switch is cut off in case of accidents.
- For ceiling-mounted or wall-mounted AP, the mounting bracket size, mounting hole pattern and diameter should meet the requirements in **Table 1-4**.

Figure 3-1 Mounting Bracket

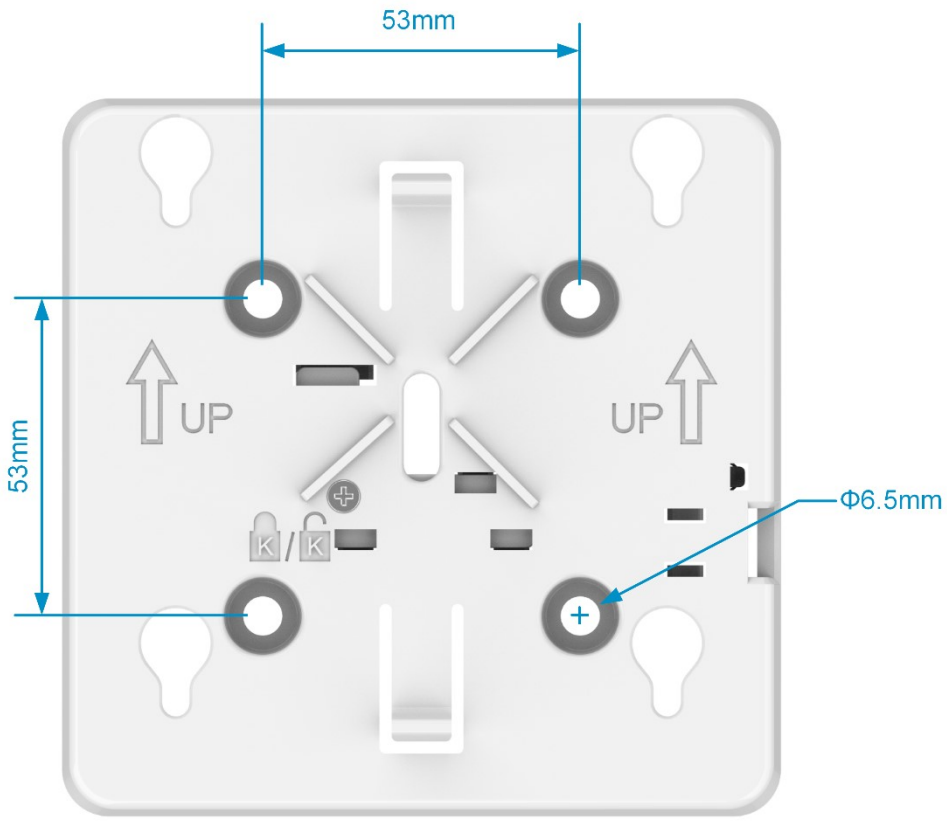

3.3 Precautions

To avoid damage to the AP, observe the following safety precautions:

- Do not power on the device during installation.
- Install the device in a well-ventilated location.
- Do not subject the device to high temperatures.
- Keep away from high voltage cables.
- Install the device indoors.
- Do not expose the device in a thunderstorm or strong electric field.
- Keep the device clean and dust-free.
- Disconnect the device before cleaning it.
- Do not wipe the device with a damp cloth.
- Do not wash the device with liquid.

- Do not open the enclosure when the device is working.
- Fasten the device tightly.

3.4 Installing the Access Point

Note

- You are advised to install the device where you can get the optimal coverage.
- In the indoor area, the signal coverage of the ceiling-mounted device is larger than that of the wall-mounted device. Please choose the ceiling-mounting method first.

3.4.1 Ceiling Mounting

(1) Drill four 6.5 mm (0.26 in.) diameter holes in the ceiling, 53 mm (2.09 in.) apart. Tap wall anchors into the holes, and drive screws through the mounting bracket into the anchors to secure the bracket.

Figure 3-2 Attaching the Mounting Bracket to the Ceiling

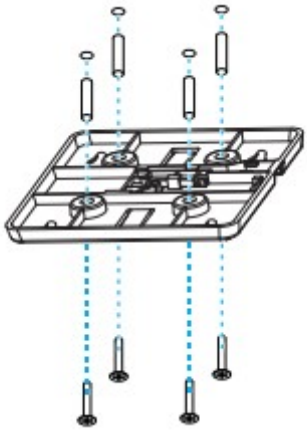

(2) Align the square feet on the rear of the AP with the mounting holes on the bracket.

Figure 3-3 Aligning the Square Feet with the Mounting Holes

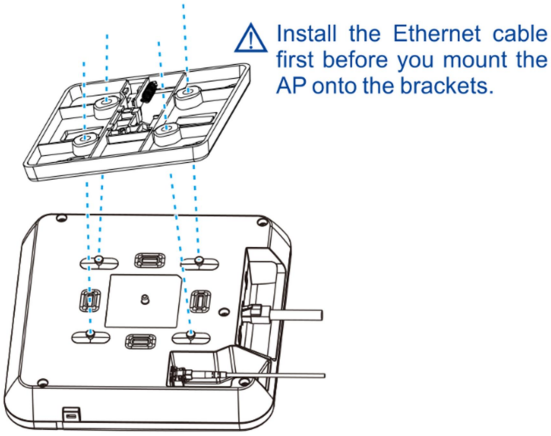

Align the square feet on the rear of the AP over the mounting holes on the bracket.

Caution

Install the Ethernet cables before mounting the AP on the bracket.

(3) Slide the AP onto the bracket in the opposite direction of the arrow on the mounting bracket until it clicks into place.

Figure 3-4 Mounting the AP on the Bracket

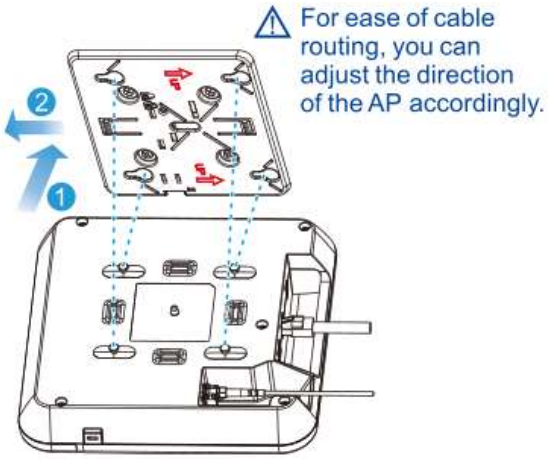

Slide the AP onto the bracket in the reverse direction against the arrow on the mounting bracket until it clicks into place.

Caution

- The AP can be installed in any of four directions on the mounting bracket depending on how you route the Ethernet cable.
- The square feet should fit easily into the mounting slots. Do not forcibly push the AP into the slots.
- After installation, verify that the AP is securely fastened.

3.4.2 Wall Mounting

(1) Drill four 6.5 mm (0.26 in.) diameter holes in the wall and 53 mm (2.09 in.) apart, with the arrow on the mounting bracket facing up. Tap wall anchors into the holes, and drive screws through the mounting bracket into the anchors to secure the bracket.

Figure 3-5 Attaching the Mounting Bracket to the Wall

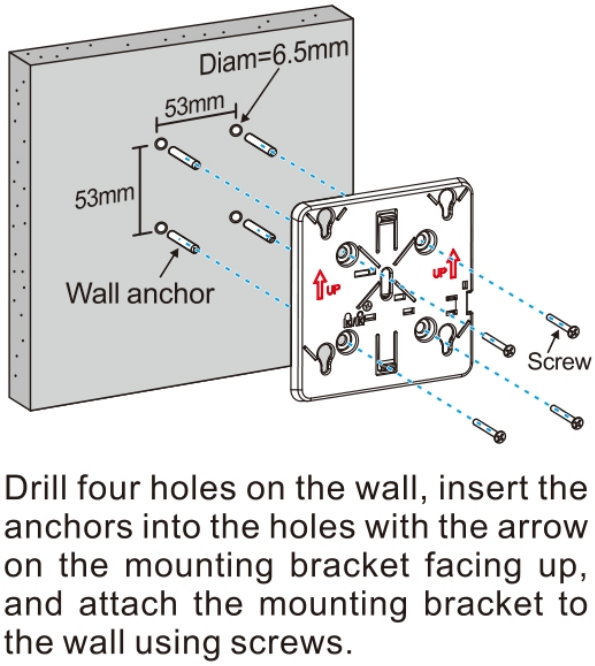

(2) Align the square feet on the rear of the AP with the mounting holes on the bracket.

Figure 3-6 Aligning the Square Feet with the Mounting Holes

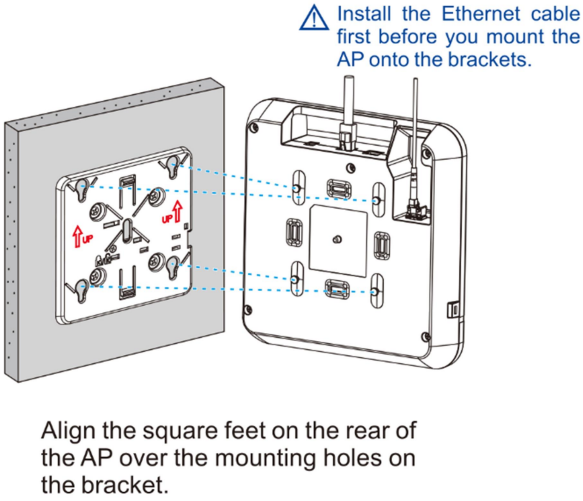

Caution

Install the Ethernet cables before mounting the AP on the bracket.

(3) Slide the AP into the holes in the opposite direction of the arrows on the mounting bracket until it clicks into place.

Figure 3-7 Mounting the AP on the Bracket

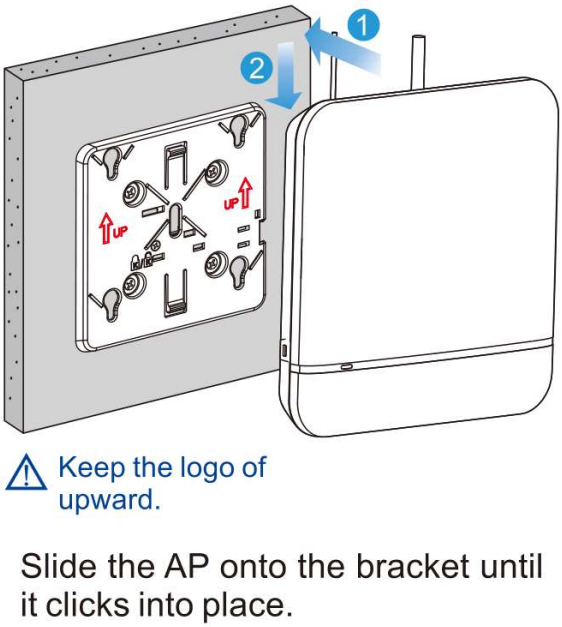

Caution

- When mounting the AP on the wall, keep the logo pointed upwards.

- The square feet should fit easily into the mounting slots. Do not forcibly push the AP into the slots.
- After installation, verify that the AP is securely fastened.

3.5 Securing the Access Point

(1) Loosen the screw on the mounting bracket and engage the security screw.

Figure 3-8 Engaging the Security Screw

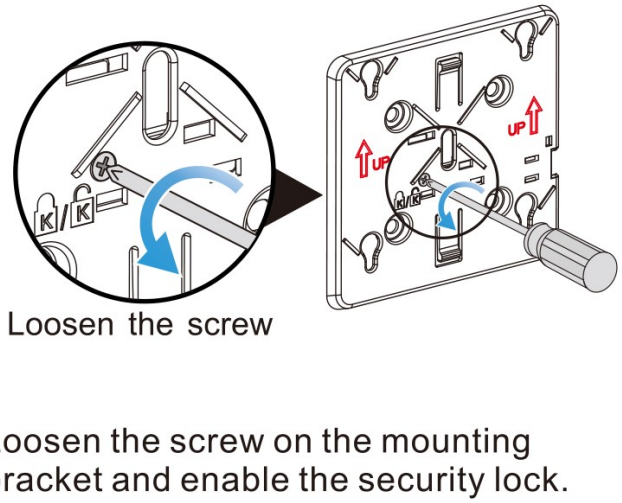

(2) Align the square feet on the rear of the AP over the mounting holes on the bracket, slide the AP in the opposite direction of the arrows on the mounting bracket until it clicks into place.

Figure 3-9 Mounting the AP on the Bracket

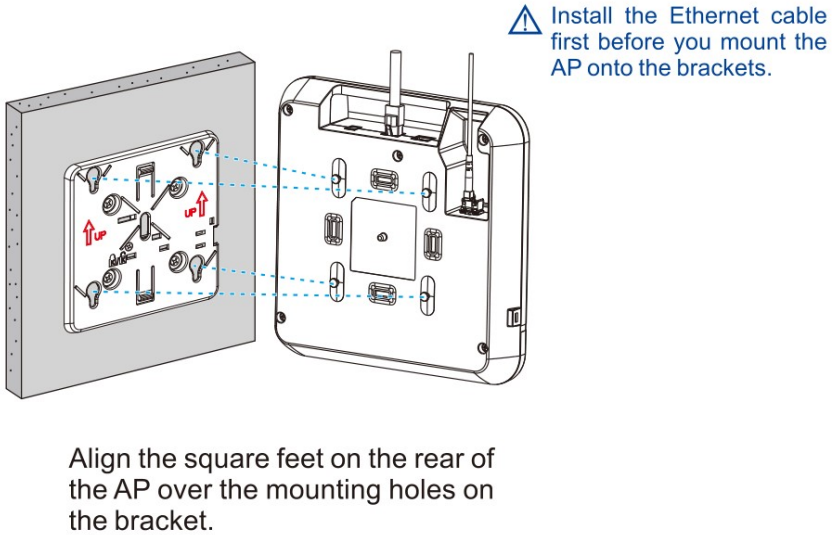

Caution

Install the Ethernet cables before mounting the AP on the bracket.

3.6 Installing the SFP Module

(1) Insert the SFP module.

Figure 3-10 Inserting the SFP Module

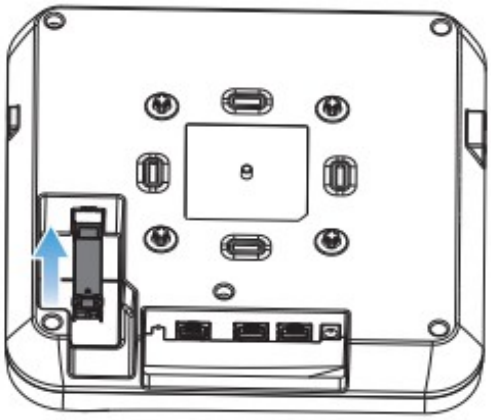

(2) Connect the fiber.

Figure 3-11 Connecting the Fiber

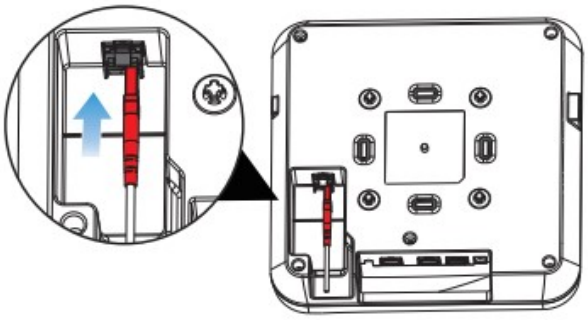

3.7 Removing the Access Point

(1) If the security lock is used, insert the key for unlocking before removing the AP from the mounting bracket. If the security lock is not used, skip this step.

Figure 3-12 Insert the Key for Unlocking

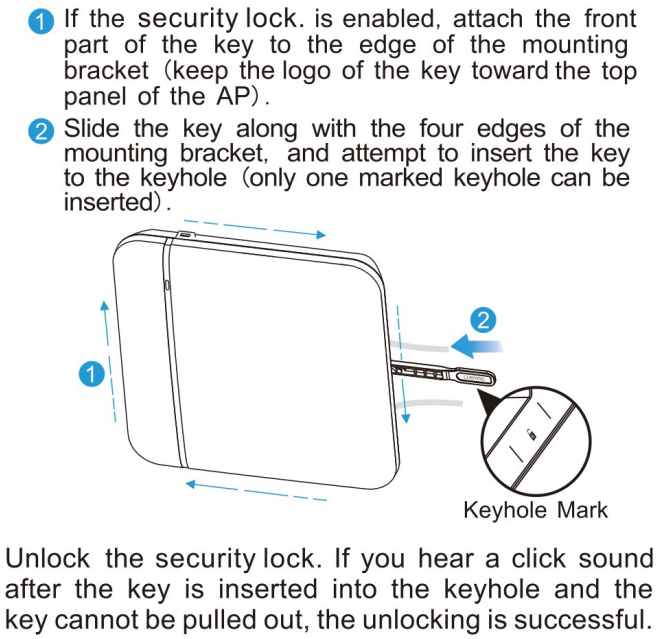

(2) If the AP is installed on the ceiling, hold the AP in your hands and slide it sideways and away from the bracket in the LAN port direction.

Figure 3-13 Removing the Ceiling-mounted AP

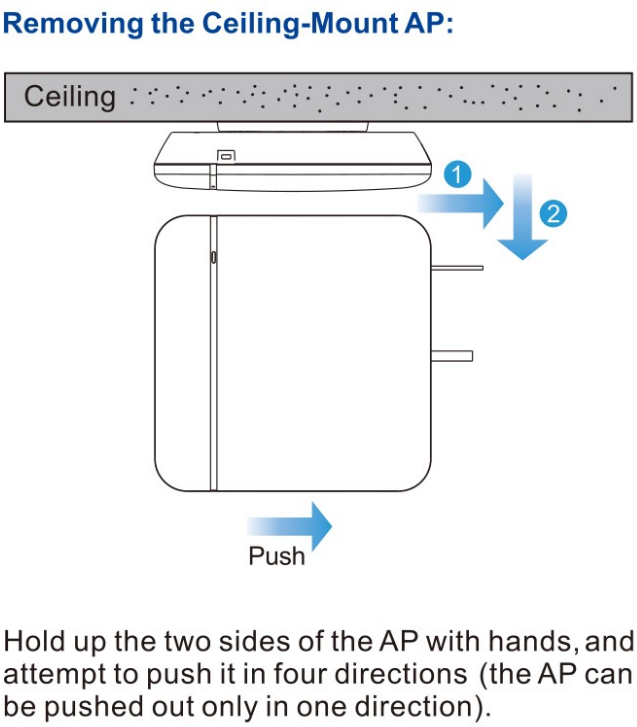

(3) If the AP is installed on the wall, hold the AP in your hands and push it upward and away from the bracket in the LAN port direction.

Figure 3-14 Removing the Wall-mounted AP

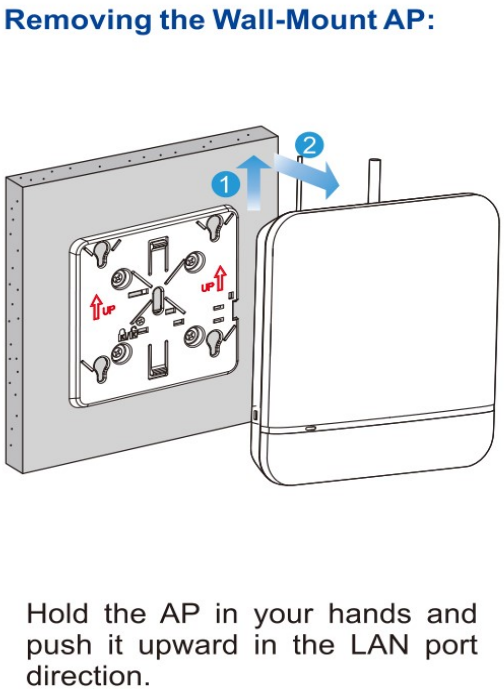

3.8 Connecting Cables

Connect UTP/STP to the LAN/PoE port on the AP. See Appendix A for supported wiring of twisted pairs.

Caution

By default, baud rate is set to 9600, data bit 8, parity none, stop bits 1 and flow control none on the Console port of the AP. The console port is used only when you want to configure the AP manually.

3.9 Bundling Cables

3.9.1 Precautions

- Make sure the cable bundles are neat and orderly.
- Bend twisted pairs naturally or to a large radius close to the connector.
- Do not over tighten cable bundle as it may reduce the cable life and performance.

3.9.2 Bundling Steps

- Bundle the drop UTP/STP cables and route them to the LAN/PoE port.

- Attach the cables in the cable tray of the rack.
- Extend the cables under the AP and run in straight line.

3.10 Checking after Installation

3.10.1 Checking Cable Connection

- Make sure the UTP/STP cable matches the interface type.
- Make sure cables are properly bundled.

3.10.2 Checking Power Supply

- Make sure all power ports are properly connected and compliant with safety requirement.
- Make sure the AP is operational after power-on.

4 Verifying Operating Status

4.1 (Optional) Configuring the Environment

Power the AP through DC power supply or PoE.

Setting up the Environment

- Verify that the AP is properly connected to the power source.
- Connect the AP to an AC through a twisted pair cable.
- When the AP is connected to a PC, verify that the PC and PoE switch are properly grounded.

4.2 Powering up the AP

4.2.1 Checking Environment before Power-on

- Verify that the power supply is properly connected.
- Verify that the input voltage matches the specification of the AP.

4.2.2 Checking Environment after Power-on

After power-on, you are advised to check the following to ensure normal operation of the AP.

- Check if any message is printed on the Web-based configuration interface of the device.
- Check if the LED works normally.

5 Monitoring and Maintenance

5.1 Monitoring

5.1.1 LED

You can observe the LED to monitor the AP in operation.

5.1.2 CLI Commands

You can run related commands on the command line interface (CLI) of the device to remotely monitor the configurations and status of the AP.

Note

- You can log in to the AP via Telnet and use monitoring related commands to maintain the AP.

5.2 Remote Maintenance

- If the AP operates as a Fat AP, you can log in to the AP remotely for maintenance.
- If the AP operates as a Fit AP, you can use AC to centrally manage and maintain the AP.

5.3 Hardware Maintenance

If the hardware is faulty, please contact our Technical Assistance Center (TAC) for help.

6 Troubleshooting

6.1 Troubleshooting Flowchart

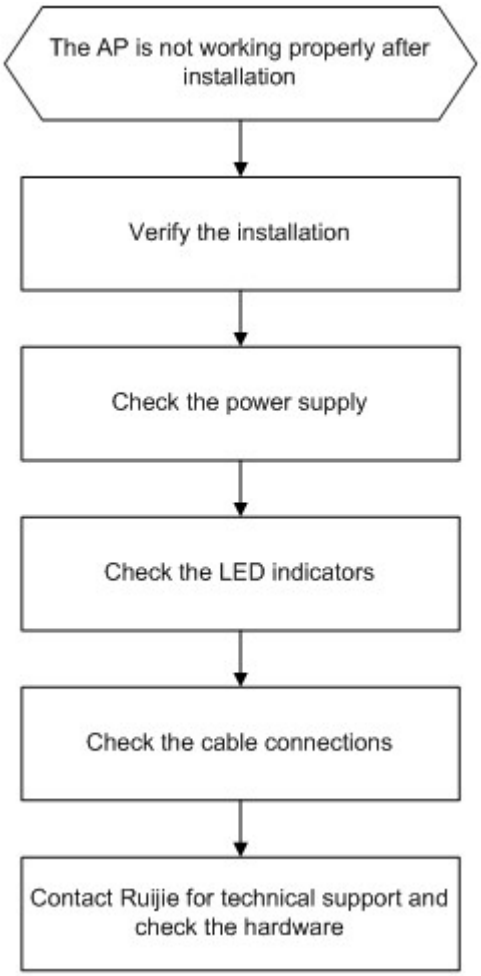

6.2 Troubleshooting

6.2.1 LED does not light up after the AP is powered on

If you use PoE power supply, verify that the power source is IEEE 802.11af compliant, and then verify that the cable is connected properly.

6.2.2 Ethernet port is not working after the Ethernet cable is plugged in

Verify that the device at the other end of the Ethernet cable is working properly. And then verify that the Ethernet cable is capable of providing the required data rate and is properly connected.

6.2.3 Wireless client cannot find the AP

(1) Verify that the device is properly powered.

(2) Verify that the Ethernet port is correctly connected.

(3) Verify that the AP is correctly configured.

(4) Move the client device to adjust the distance between the client and the AP.

6.2.4 LED keeps blinking red

The LED stays blinking red for a long time, indicating the Ethernet port is not connected. Verify the Ethernet connection.

6.2.5 LED keeps blinking green

The AP performs initialization after power on. During this period, the LED keeps blinking green and does not turn solid until the initialization is completed. **Note**: If the blinking persists for an hour, it indicates the device initialization fails and the device is faulty.

6.2.6 LED keeps blinking orange (Fit AP mode)

Sometimes the AP performs firmware upgrade after power on. During this period, the LED keeps blinking orange and does not turn solid until the upgrade is completed. **Note**: Do not plug or unplug the power cord when the Status LED is blinking as firmware update takes time. If the blinking persists for ten minutes, it indicates the device fails to complete firmware upgrade and is faulty.

6.2.7 LED does not turn solid blue or blinking blue

After the system starts and the LED does not turn solid blue or blinking blue, probably because the AP has not established a proper CAPWAP connection with the AC. Verify the AC is operational and configured properly.

7 Appendix

7.1 Connectors and Media

1000BASE-T/100BASE-TX/10BASE-T

The 1000BASE-T/100BASE-TX/10BASE-T is a 10/100/1000 Mbps auto-negotiation port that supports auto MDI/MDIX.

Compliant with IEEE 802.3ab, 1000BASE-T requires Category 5e 100-ohm UTP or STP (STP is recommended) with a maximum distance of 100 meters (328 feet).

1000BASE-T requires all four pairs of wires be connected for data transmission, as shown in **Figure 7-1**.

Figure 7-1 1000BASE-T Connection

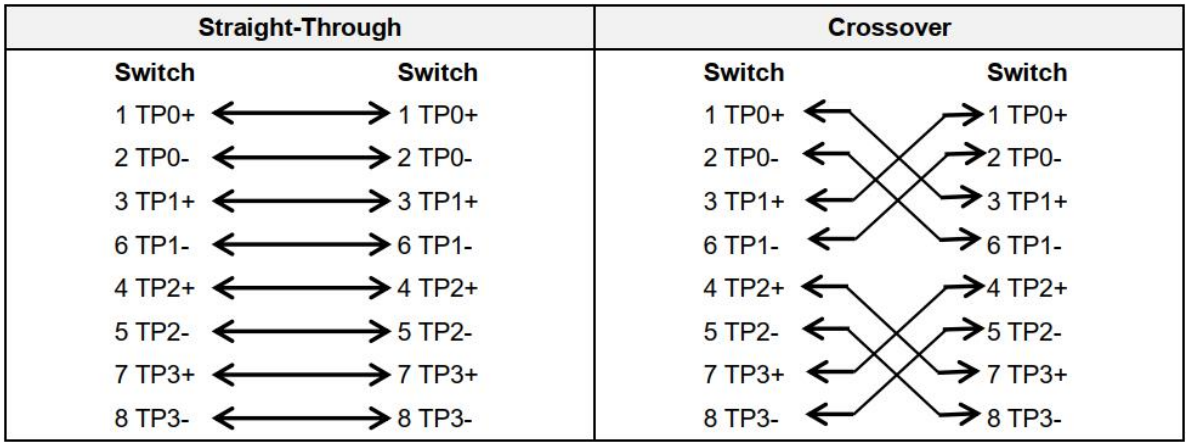

10BASE-T uses Category 3, 4, 5 100-ohm UTP/STP and 1000BASE-T uses Category 5 100-ohm UTP/STP for connections. Both support a maximum length of 100 meters. **Figure 7-2** shows 100BASE-TX/10BASE-T pin assignments.

Figure 7-2 100BASE-TX/10BASE-T Pin Assignments

Pin	Socket	Plug
1	Input Receive Data+	Output Transmit Data+
2	Input Receive Data-	Output Transmit Data-
3	Output Transmit Data+	Input Receive Data+
6	Output Transmit Data-	Input Receive Data-
4,5,7,8	Not used	Not used

Figure 7-3 shows wiring of straight-through and crossover cables for 100BASE-TX/10BASE-T.

Figure 7-3 100BASE-TX/10BASE-T Connection

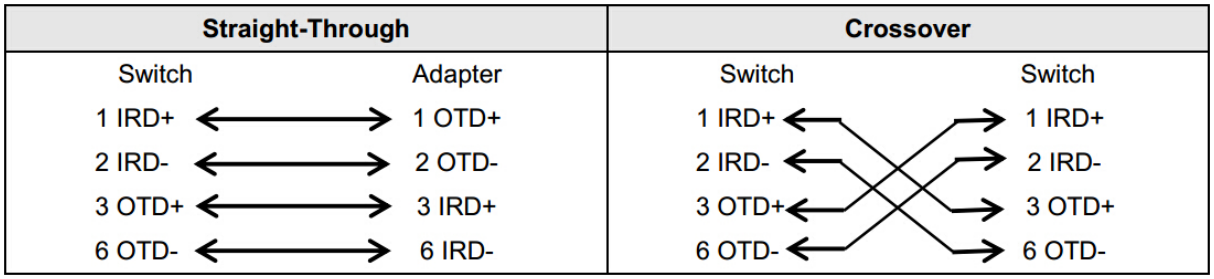

7.2 Mini-GBIC Modules

We provide appropriate SFP modules (Mini-GBIC) modules according to the port types. You can select the module to suit your specific needs. The following models and technical specifications of some SFP modules are listed for your reference.

Table 7-1 Models and Technical Specifications of the SFP Module

Wavelength (nm)	Media Type	Support DDM (Yes/No)	Intensity of Transmitted Light (dBm)		Intensity of Received Light (dBm)	
			min	max	min	max
1310Tx/1550Rx	Single-mode fiber	No	-9	-3	-	-18

Table 7-2 Cabling Specifications of the SFP Module

Port	Media Type	Core Size (μm)	Cabling Distance
LC	Single-mode fiber	9/125	0.3 km

Caution

- For the fiber module with transmission distance exceeding 40 km and more, one on-line optical attenuator should be added on the link to avoid the overload of the optical receiver when short single-mode optical fibers are used.
- Fiber modules generate laser. Do not stare at light source.
- To keep fiber modules clean, please use dust caps when the modules are not connected with fibers.

7.3 Cabling Recommendations

During installation, route cable bundles upward or downward along the sides of the rack depending on the actual situation in the equipment room. All cable connectors should be placed at the bottom of the cabinet rather than be exposed outside of the cabinet. Power cords should be routed upward or downward beside the cabinet close to the location of the DC power distribution cabinet, AC power outlet, or lightning protection box.

- Required Minimum Cable Bend Radius
  - The minimum bend radius of a power, communication or flat cable should be 5 times the overall diameter of the cable. If the cable is constantly bent, plugged or unplugged, the bend radius should be 7 times the overall diameter.
  - The minimum bend radius of a coaxial cable should be 7 times the overall diameter of the cable. If the cable is constantly bent, plugged or unplugged, the bend radius should be 10 times the overall diameter.
  - The minimum bend radius of a high-speed cable, such as an SFP+ cable should be 5 times the overall diameter of the cable. If the cable is constantly bent, plugged or unplugged, the bend radius should be 10 times the overall diameter.
- Precautions for Cable Bundling
  - Before bundling cables, correctly mark labels and stick the labels to cables where appropriate.
  - Cables should be neatly and properly bundled, as shown in **Figure 7-4**.

Figure 7-4 Bundling Cables

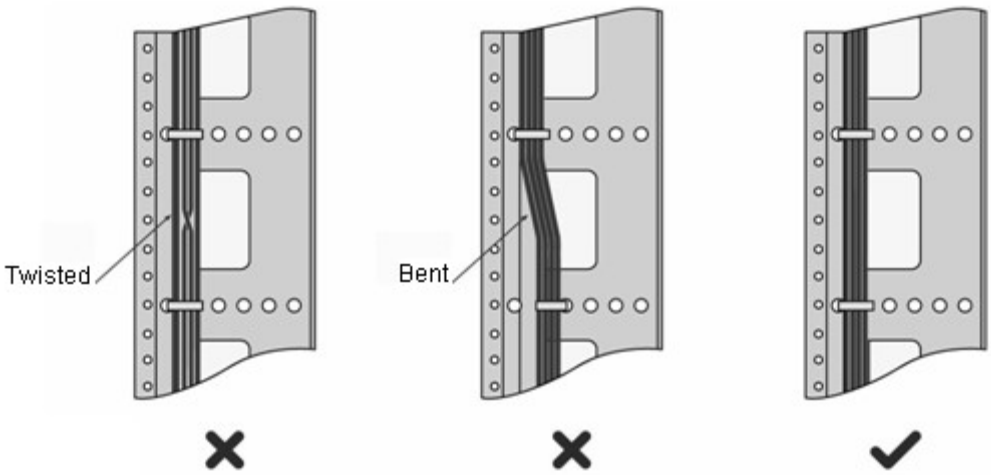

  - Route and bundle power, signal, ground cables separately. When the cables are close to each other, cross them. When power cords run parallel to signal cables, the distance between them must be greater than 30 mm.
  - All cable trays and their accessories shall be smooth and free from sharp edges.
  - Holes in metal, through which cables pass shall have smooth, well-rounded surfaces or be protected with insulating bushings.
  - Use proper cable ties to bind cables together. Do not tie two or more cable ties to bind cables.
  - Cut off excess cable tie cleanly with no sharp edges after bundling cables, as shown in Figure B-2.

Figure 7-5 Cutting off Excess Cable Tie

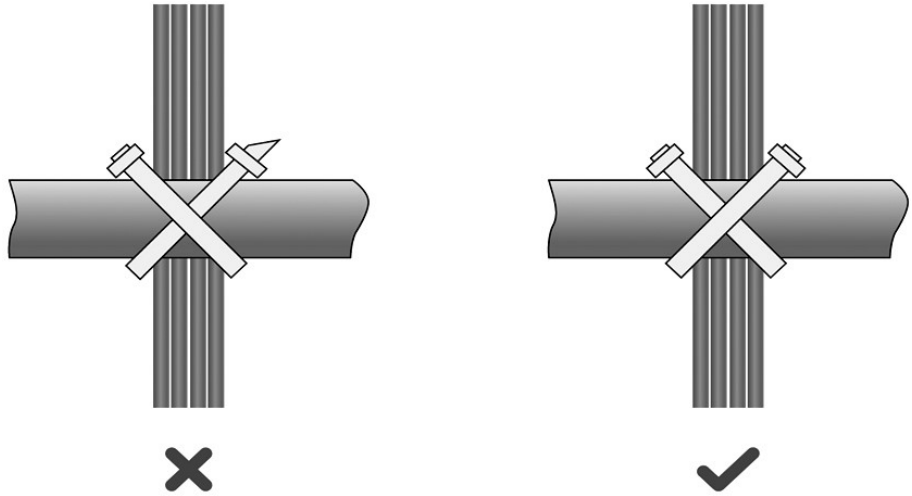

- If cables are to be bent, bind them first but do not tie cable ties within the bend to avoid stress on the cables, which may otherwise cause the wires inside to break, as shown in **Figure 7-6**.

Figure 7-6 Do Not Tie Cable Ties within the Bend

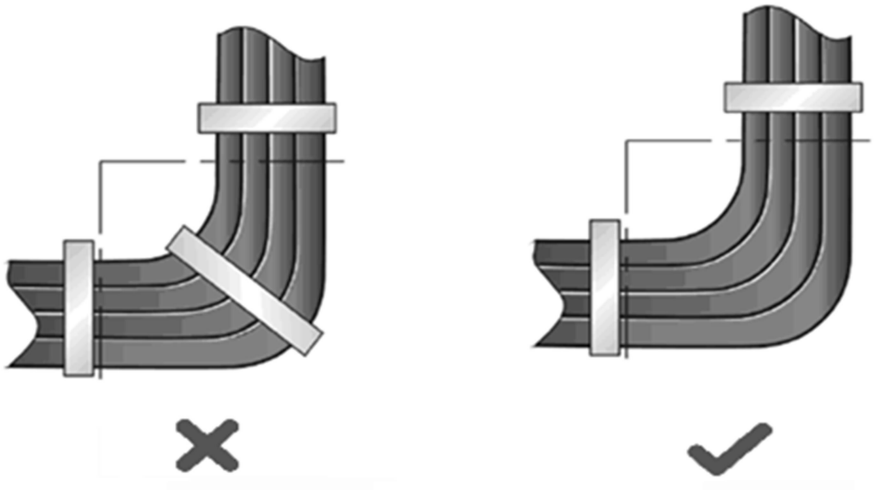

- Wrap up unnecessary or excess cables and bind them to the appropriate rack position, where device operation is not affected and no damages occur to the device and cables during debugging.
- Do not bind power cords to the rails for moving parts.
- Leave a certain length of the cable connecting moving parts, such as the ground wire of the cabinet door, to avoid stress on the cable; when moving parts are in place, ensure the excess cable length shall not contact heat sources, sharp corners or edges. If heat sources are unavoidable, use high-temperature cables instead.
- When using screws to fasten cable lugs, the bolts or nuts shall be tightened and prevented from loosening, as shown in **Figure 7-7**.

Figure 7-7 Fastening Cable Lugs

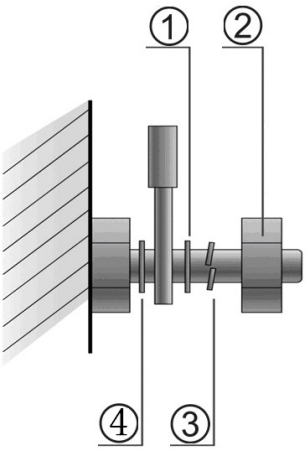

Note	1. Flat washer	3. Spring washer
	2. Nut	4. Flat washer

- When using a stiff cable, fix it near the cable lug to avoid stress on the lug and cable.
- Do not use self-tapping screws to fasten terminals.
- Bundle cables of the same type and running in the same direction into groups. Keep cables clean and straight.
- Cables shall be tied according to the following table.

Diameter of Cable Bundle (mm)	Space between Bundles (mm)
10	80 to 150
10 to 30	150 to 200
30	200 to 300

- Do not tie knots for cables or cable bundles.
- The metal parts of the cold-pressed terminal blocks, such as air circuit breakers, shall not be exposed outside of the blocks.

7.4 Power Supply

- DC power supply:

Input voltage: 48 V

Rated current: 0.6 A

- Technical Specifications of the DC Power Connector
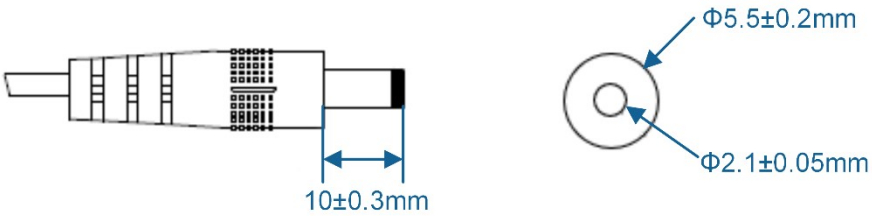
Inner Diameter	Outer Diameter	Depth	Polarity
2.0 mm (0.08 in.)	6.3 mm (0.25 in.)	10 mm (0.39 in.)	Inner pole: positive Outer pole: negative