Contents

1 Product Overview 1

1.1 About the TS-MWI3000W4P 1

1.2 Product Appearance 1

1.3 Package Contents 5

1.4 Technical Specifications 5

1.4.1 Dimensions and Weight 5

1.4.2 Radio Specifications 6

1.4.3 Port Specifications 7

1.4.4 Power Supply and Consumption 8

1.4.5 Environment and Reliability 8

1.5 LEDs and Reset Button 8

2 Preparing for Installation 10

2.1 Safety Precautions 10

2.1.1 General Safety Precautions 10

2.1.2 Handling Safety 10

2.1.3 Electric Safety 10

2.1.4 Storage Security 11

2.2 Installation Environment Requirements 11

2.2.1 Bearing Requirements 11

2.2.2 Ventilation Requirements 11

2.2.3 Space Requirements 11

2.2.4 Temperature/Humidity Requirements 11

2.2.5 Cleanliness Requirements 12

2.2.6 Anti-interference Requirements 13

2.2.7 Installation Site Requirements 13

2.3 Tools 13

3 Installing the Access Point 14

3.1 Installation Flowchart 14

3.2 Before You Begin 14

3.3 Precautions 15

3.4 Installing the Access Point 16

3.4.1 Installing the AP on a Wall 16

3.4.2 Installing the AP on an 86 mm Junction Box 18

3.4.3 Removing the Access Point 22

3.5 Connecting Cables 24

3.6 Bundling Cables 24

3.6.1 Precautions 24

3.6.2 Steps 24

3.7 Checklist After Installation 24

3.7.1 Checking the AP 24

3.7.2 Checking Cable Connection 24

3.7.3 Checking the Power Supply 24

4 Verifying Operating Status 25

4.1 Establishing the Configuration Environment 25

4.2 Powering on the AP 25

4.2.1 Checklist Before Power-on 25

4.2.2 Checklist After Power-on 25

5 Monitoring and Maintenance 26

5.1 Monitoring 26

5.1.1 LEDs 26

5.1.2 CLI Commands 26

5.2 Remote Maintenance 26

5.3 Hardware Maintenance 26

6 Common Troubleshooting 27

6.1 General Troubleshooting Flowchart 27

6.2 Common Faults 27

6.2.1 Ethernet Port Is Not Working After the Ethernet Cable Is Plugged In 27

6.2.2 LED Is Off for a Long Time 27

6.2.3 LED Is Solid Red 28

6.2.4 LED Is Solid Green 28

6.2.5 LED Keeps Fast Blinking Green (in Fit Mode) 28

6.2.6 LED Turns Slow Blinking Red 28

6.2.7 Clients Can Not Find the Access Point 28

7 Appendix 29

7.1 Connectors and Media 29

7.2 Cabling Recommendations 31

7.3 Optical Modules and Specifications 34

7.4 DC Connector Specifications 35

1 Product Overview

1.1 About the TS-MWI3000W4P

The TS-MWI3000W4P is a wall-plate micro access point (AP) launched by TS for complicated application scenarios in the sectors including healthcare, general education, government, finance, and business, such as the ward network, dormitory network, hotel network, and high-density office network. In compliance with the IEEE 802.11ax standard, the AP works in both 2.4 GHz and 5 GHz frequency bands. It delivers a combined peak data rate of 2.975 Gbps, eliminating the performance bottleneck.

The TS-MWI3000W4P provides one uplink 2.5GE optical port and one DC power connector connected through a hybrid cable for data and power transmission. The AP also offers four downlink 1GE Ethernet ports. Two downlink Ethernet ports can be connected to IoT modules, providing wired access in the wards, dormitories, and offices while remaining applicable to IoT expansion scenarios such as smart wards and classrooms.

Important factors such as the wireless network security, radio control, mobile access, Quality of Service (QoS), and seamless roaming are fully taken into account for TS-MWI3000W4P. Therefore, this AP can be used together with TS's access controllers (ACs) to implement STA data forwarding, security, and access control.

1.2 Product Appearance

The TS-MWI3000W4P provides two RF connectors, one 2.5GE optical port, four uplink 1GE Ethernet ports (LAN 1 and LAN 2 ports support IoT module extension), one console port, and one DC power connector with a terminal block. The TS-MWI3000W4P can be powered through the hybrid cable or powered by a DC adapter.

Figure 1-1 Front View

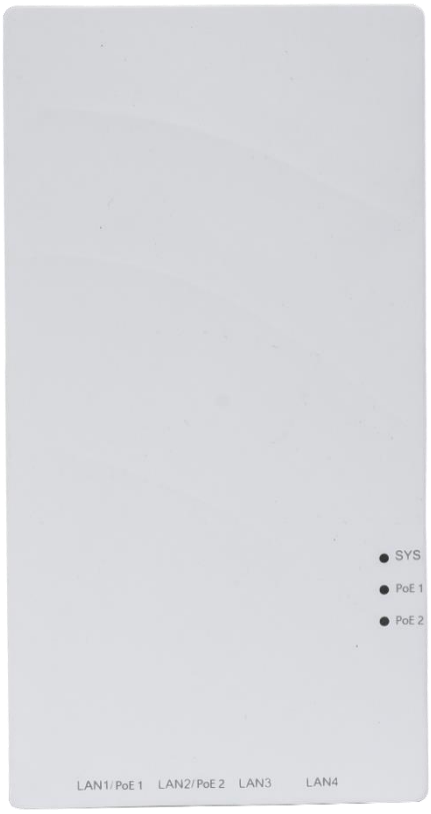

Figure 1-2 Left Side View

Figure 1-3 Right Side View

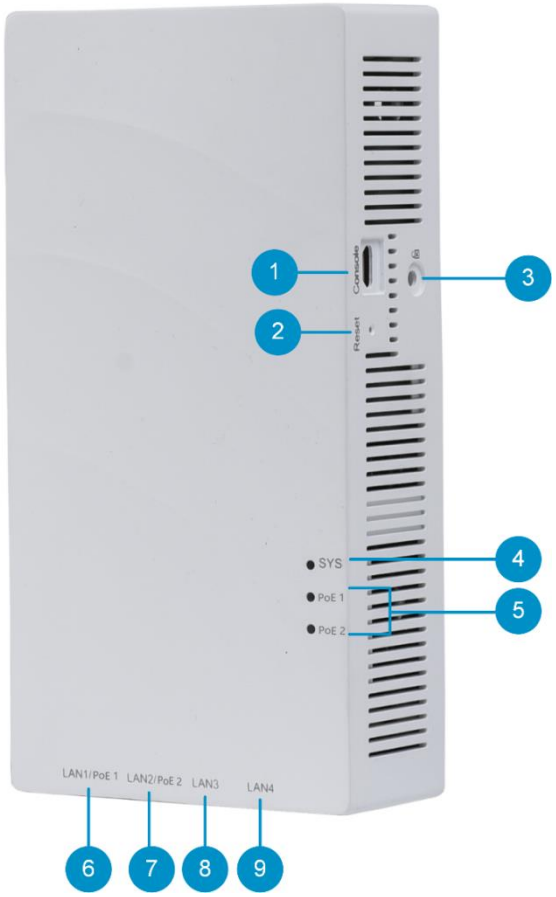

Table 1-1 Ports and Button

No.	Item	Description
1	Console port	Connected with a serial port cable for device management
2	Reset button	Used to reboot the device or restore the device to factory settings
3	Lock slot	Connected to Kensington lock
4	System status LED	Used to indicate the system status
5	PoE status LED	Used to indicate whether there is power supply to external devices
6	LAN1/PoE1 port	Downlink service port for data transmission, supporting 802.3af-compliant PoE output and delivering up to10 W of power on a single port
7	LAN2/PoE2 port	Downlink service port for data transmission, supporting 802.3af-compliant PoE output and delivering up to10 W of power on a single port
8 and 9	1GE LAN ports	Downlink service ports for data transmission

Figure 1-4 Rear View

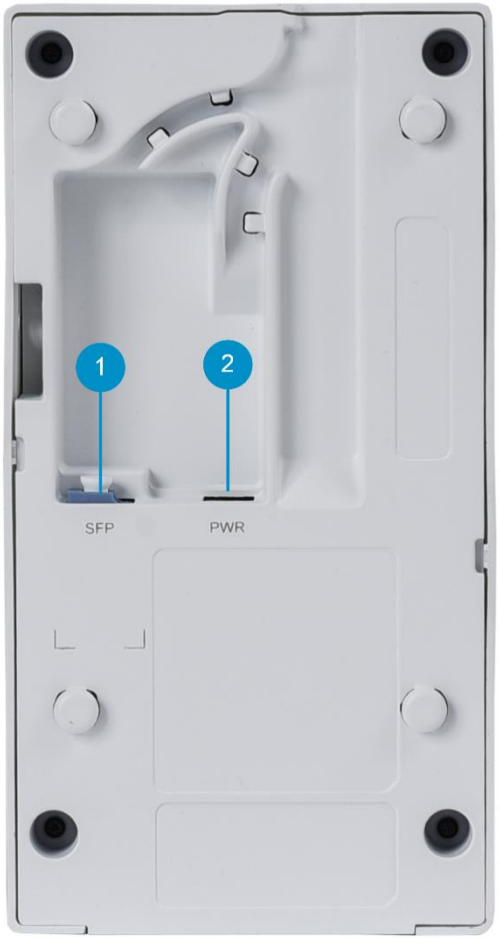

Table 1-2 Port and Connector

No.	Item	Description
1	2.5GE SFP port	Uplink service port for data transmission
2	DC power connector	Terminal block connector for supplying power to the AP

Note

- The product nameplate is at the bottom of the AP.

1.3 Package Contents

Table 1-3 Package Contents

No.	Item	Quantity
1	TS-MWI3000W4P access point	1
2	Mounting bracket	1
3	Screw package (two M4 x 25 mm tapping screws, two M5 wall anchors, two M4 x 25 mm machine screws, and one M3 x 4 mm Torx machine screw	1
4	Desiccant	1
5	*Warranty Card*	1
6	Power plug	1
7	*Quick Start Guide* (including *List of Hazardous Substances* and *Package Contents*)	1
8	Hybrid box	1

1.4 Technical Specifications

1.4.1 Dimensions and Weight

Table 1-4 Dimensions and Weight

Dimensions and Weight	TS-MWI3000W4P
Dimensions (W x D x H)	86.0 mm x 164.0 mm x 43.4 mm (3.39 in. x 6.46 in. x 1.71 in.)
Weight	Main unit: ≤ 0.37 kg (0.82 lbs) Mounting bracket: ≤ 0.08 kg (0.18 lbs)
Mounting	Wall/In-wall mount (86 junction box)
Color	White
Lock option	Kensington lock
Mounting bracket dimensions (W x D x H)	86.0 mm x 128.0 mm x 19.0 mm (3.39 in. x 5.04 in. x 0.75 in.)
Mounting hole pattern	In-wall mount (86 junction box): 60 mm (2.36 in.) Wall mount: 83.5 mm (3.29 in.)
Mounting hole diameter	4.2 mm (0.17 in.)

1.4.2 Radio Specifications

Table 1-5 Radio Specifications

Radio Specifications	TS-MWI3000W4P
Radio design	Dual-radio design, up to four spatial streams Radio 1: 2.4 GHz, two spatial streams: 2x2, MU-MIMO Radio 2: 5 GHz, two spatial streams: 2x2, MU-MIMO
Operating frequency bands	Radio 1: 802.11b/g/n/ax, 2.400 GHz to 2.483 GHz Radio 2: 802.11a/n/ac/ax, 5.150 GHz to 5.350 GHz, 5.470 GHz to 5.725 GHz, 5.725 GHz to 5.850 GHz Note: Country-specific restrictions apply.
Data rates	Radio 1: 2.4 GHz, 575 Mbps Radio 2: 5 GHz, 2.400 Gbps Combined peak data rate: 2.4 GHz + 5 GHz, 2.975 Gbps
Antenna type	Built-in smart antennas
Antenna gain	WIFI 5G Ant1: 5.86dBi, Ant2: 6.36dBi WIFI 2.4G Ant1: 3.76dBi, Ant2: 3.98dBi BLE 1.5dBi
Max. transmit power	20 dBm Note: The transmit power is limited by local regulatory requirements.
Power increment	1 dBm
Modulation types	802.11b: BPSK, QPSK, and CCK 802.11a/g/n: BPSK, QPSK, 16-QAM, 64-QAM, and 256-QAM (dedicated extensibility) 802.11ac: BPSK, QPSK, 16-QAM, 64-QAM, and 256-QAM 802.11ax: BPSK, QPSK, 16-QAM, 64-QAM, 256-QAM, and 1024-QAM

Radio Specifications	TS-MWI3000W4P
Receive sensitivity	802.11b: –91 dBm (1 Mbps), –90 dBm (5 Mbps), –87 dBm (11 Mbps) 802.11a/g: –89 dBm (6 Mbps), –82 dBm (24 Mbps), –78 dBm (36 Mbps), –72 dBm (54 Mbps) 802.11n: –85 dBm @ MCS0, –67 dBm @ MCS7 802.11ac HT20: –85 dBm (MCS0), –60 dBm (MCS9) 802.11ac HT40: –82 dBm (MCS0), –57 dBm (MCS9) 802.11ac HT80: –79 dBm (MCS0), –53 dBm (MCS9) 802.11ax HE80: –79 dBm (MCS0), –52 dBm (MCS11) 802.11ax HE160: –75 dBm (MCS0), –48 dBm (MCS11)

1.4.3 Port Specifications

Table 1-6 Port Specifications

Port Specifications	TS-MWI3000W4P
IoT	Bluetooth 5.1 Remote maintenance through Bluetooth serial port Supporting multiple IoT protocols, including ZigBee, RFID, and Thread (through software upgrade)
Fixed service port	Uplink: 1 x 2.5GE Base-X LC port Downlink: 4 x 10/100/1000Base-T Ethernet ports with auto-negotiation. LAN 1 and LAN 2 ports support 802.3af-compliant PoE ouput. The total power output of two ports is 10 W. When LAN 1 and LAN 2 ports simultaneously supply power to external devices, the maximum power output on a single port is 5 W.
Fixed management port	1 x Micro USB console port
Status LED	1 x system status LED 2 x PoE status LEDs
Button	1 x Reset button

1.4.4 Power Supply and Consumption

Table 1-7 Power Supply and Consumption

Power Supply and Consumption	TS-MWI3000W4P
Power supply modes	● 57V DC/0.6 A power input over DC connector ● PoE input through a hybrid cable (in compliance with IEEE 802.3af standard)
External power supply	Supported. LAN 1 and LAN 2 ports can source power to IoT units.
Max. power consumption	Not supplying power to external devices: 12.96 W Supplying power to external devices: 25.6 W

Caution

- When the AP is powered by PoE, ensure that the power sourcing equipment (PSE) is 802.3af-capable.
- The AP adopts a fan-free design. Maintain sufficient clearance around the AP for air circulation.

1.4.5 Environment and Reliability

Table 1-8 Standard Compliance

Environment and Reliability	TS-MWI3000W4P
Temperature	Operating temperature: –10°C to +40°C (14°F to 104°F) Storage temperature: –40°C to +70°C (–40°F to +158°F) At an altitude between 3000 m (3280.84 yd) and 5000 m (5468.07 yd), every time the altitude increases by 220 m (240.60 yd), the maximum temperature decreases by 1°C (1.8°F).
Humidity	Operating humidity: 5% RH to 95% RH (non-condensing) Storage humidity: 5% RH to 95% RH (non-condensing)
IP rating	IP41
Safety regulations	IEC 60950-1, IEC 62368-1, and GB 4943.1
EMC regulations	EN301489, EN55032, and EN55035

1.5 LEDs and Reset Button

Note

LED status description are applicable to both fit and fat APs, unless otherwise specified.

Table 1-9 System Status LED

Color	Status	Description
Off	N/A	The AP is not powered on. The AP is powered on, but the LED is manually turned off.
Solid green	N/A	The software system of the AP is being initialized.
Solid red	N/A	The system is running properly, but the uplink service port is linked down.
Slow blinking in red	On for 3s Off for 1s	In fit mode, the establishment of a CAPWAP tunnel between the AP and AC has timed out.
Fast blinking in green	On for 0.2s Off for 0.2s	In fit or MACC mode, the software system of the AP is being updated.
Slow blinking in green	On for 3s Off for 1s	The system is running properly.
Fast blinking in red	On for 0.2s Off for 0.2s	In fit mode, the AP is being located.

Table 1-10 PoE Status LED

Color	Status	Description
Off	N/A	LAN port is not connected or serves as a downlink port for data communication.
Solid Green	N/A	LAN port is supplying power to an external device.

Table 1-11 Reset Button

Button	Action	Description
Reset button	Press and hold the pin to the Reset button for less than 2 seconds.	Restart the AP.
	Press and hold the pin to the Reset button for more than 5 seconds.	Restore the AP to factory settings.

2 Preparing for Installation

2.1 Safety Precautions

Note

- To avoid personal injury and device damage, carefully read the safety precautions before you install the device.
- The following safety precautions may not cover all possible dangers.

2.1.1 General Safety Precautions

- Do not expose the AP to high temperature, dusts, or harmful gases. Do not install the AP in an inflammable or explosive environment. Keep the AP away from EMI sources such as large radar stations, radio stations, and substations. Do not subject the AP to unstable voltage, vibration, and noises.
- The installation site should be free from water flooding, seepage, dripping, or condensation. The installation site should be selected according to network planning, communications equipment features, and considerations such as climate, hydrology, geology, earthquake, electrical power, and transportation.
- The installation site should be dry. It is not recommended that the AP be installed in a place near the sea. Keep the device at least 500 meters away from the ocean and do not face it towards the sea breeze.
- Do not place the device in walking areas.
- During the installation and maintenance, do not wear loose clothes, ornaments, or any other things that may be hooked by the chassis.
- Keep tools and components away from walking areas.

2.1.2 Handling Safety

- Prevent the AP from being frequently handled.
- Cut off all the power supplies and unplug all power cords before moving or handling the device.

2.1.3 Electric Safety

Warning

- Improper or incorrect electric operations may cause a fire, electric shock, and other accidents, and lead to severe and fatal personal injury and device damage.
- Direct or indirect contact with high voltage or mains power supply via wet objects may cause fatal dangers.

- Observe local regulations and specifications during electric operations. Only personnel with relevant qualifications can perform such operations.
- Check whether there are potential risks in the work area. For example, check whether the ground is wet.
- Find the position of the indoor emergency power switch before installation. Cut off the power switch in case of accidents.

- Check the AP carefully for confirmation before shutting down the power supply.
- Do not place the device in a damp/wet location. Do not let any liquid enter the chassis.
- Keep the device far away from grounding or lightning protection devices for power equipment.
- Keep the device away from radio stations, radar stations, high-frequency high-current devices, and microwave ovens.

2.1.4 Storage Security

For proper working of the AP, the AP must be stored in an environment based on the storage temperature/humidity requirements in Specifications.

⚠ Caution

If the AP is stored for more than 18 months, power on the AP and run it for consecutive 24 hours to activate the AP.

2.2 Installation Environment Requirements

Install the device indoors to ensure its normal operation and prolonged service life.

The installation site must meet the following requirements.

2.2.1 Bearing Requirements

Evaluate the weight of the device and its accessories (such as the bracket and power supply module), and ensure that the ground of the installation site meets the requirements.

2.2.2 Ventilation Requirements

Reserve sufficient space in front of the air vents to ensure normal heat dissipation. After various cables are connected, bundle the cables or place them in the cable management bracket to avoid blocking air inlets.

2.2.3 Space Requirements

Avoid mounting the AP against the wall and maintain a minimum clearance of 0.1 m around the device to ensure proper cooling and ventilation.

2.2.4 Temperature/Humidity Requirements

To ensure the normal operation and prolonged service life of the AP, maintain an appropriate temperature and humidity in the equipment room.

The equipment room with too high or too low temperature and humidity for a long period may damage the device.

- In an environment with high relative humidity, the insulating material may have poor insulation or even leak electricity.
- In an environment with low relative humidity, the insulating strip may dry and shrink, loosening screws.
- In a dry environment, static electricity is prone to occur and damage the internal circuits of the AP.
- Too high temperatures can accelerate the aging of insulation materials, greatly reducing the reliability of the

AP and severely affecting its service life.

Note

The ambient temperature and humidity of the device are measured at the point that is 1.5 m above the floor and 0.4 m before the device when there is no protective plate in front or at the back of the device.

2.2.5 Cleanliness Requirements

Dust poses a major threat to the running of the AP. The indoor dust falling on the AP may be adhered by static electricity, causing poor contact of the metallic joint. Such electrostatic adherence may occur more easily when the relative humidity is low, not only affecting the service life of the AP, but also causing communication faults. The following table describes the requirements for the dust content and granularity in the equipment room.

Table 2-1 Requirements for Dust

Dust	Unit	Content
Dust particles (diameter ≤ 0.5 μm)	Particles/m3	≤ 1.4×10^7
Dust particles (0.5 μm < diameter ≤ 1 μm)	Particles/m3	≤ 7×10^5
Dust particles (1 μm < diameter ≤ 3 μm)	Particles/m3	≤ 2.4×10^5
Dust particles (3 μm < diameter ≤ 5 μm)	Particles/m3	≤ 1.3×10^5

Apart from dust, the salt, acid, and sulfide in the air in the equipment room must also meet strict requirements. These harmful substances will accelerate metal corrosion and component aging. Therefore, the equipment room should be properly protected against the intrusion of harmful gases, such as sulfur dioxide, hydrogen sulfide, nitrogen dioxide, and chlorine gas. The following table lists limit values for harmful gases.

Table 2-2 Requirements for Gases

Gas	Average (mg/m3)	Maximum (mg/m3)
Sulfur dioxide (SO2)	0.2	1.5
Hydrogen sulfide (H2S)	0.006	0.03
Nitrogen dioxide (NO2)	0.04	0.15
Ammonia gas (NH3)	0.05	0.15
Chlorine gas (CI2)	0.01	0.3

Note

Average refers to the average value of harmful gases measured in one week. **Maximum** refers to the upper limit of harmful gases measured in one week, and the maximum value cannot last for more than 30 minutes every day.

2.2.6 Anti-interference Requirements

- Take interference prevention measures for the power supply system.
- Keep the AP away from the grounding equipment or lightning and grounding equipment of the power device as much as possible.
- Keep the device far away from high-frequency current devices such as high-power radio transmitting station and radar launcher.
- Take electromagnetic shielding measures when necessary.

2.2.7 Installation Site Requirements

Ensure that the following requirements are met in the installation site.

- Sufficient space is reserved at the air inlet and air vents of the device, to facilitate heat dissipation of the device.
- The installation site allows for proper cooling and ventilation.
- The installation side is sturdy enough to support the weight of the device and its accessories.

2.3 Tools

Table 2-3 Tools

Common Tools	Phillips screwdriver, power cables, Ethernet cables, cage nuts, diagonal pliers, and binding straps
Dedicated Tools	Anti-static gloves, wire stripper, crimping pliers, and wire cutter
Meters	Multimeter and bit error rate tester (BERT)
Relevant Devices	Fiber splicing equipment

Note

The TS-MWI3000W4P is delivered without a tool kit. The tool kit is customer-supplied.

3 Installing the Access Point

The TS-MWI3000W4P must be used indoors and installed at a fixed position.

Caution

Before installing the AP, make sure that you have carefully read the requirements described in Chapter 2.

3.1 Installation Flowchart

Figure 3-1 Installation Flowchart

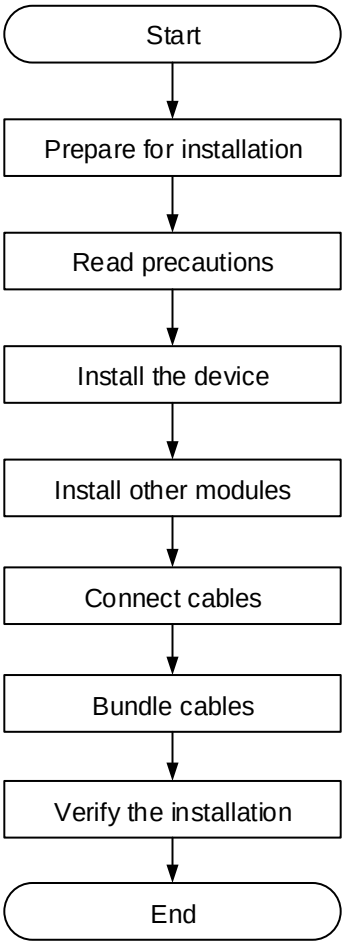

3.2 Before You Begin

Carefully plan and arrange the installation location, networking mode, power supply, and cabling before installing the device.

Confirm the following requirements before installation:

- The installation location provides sufficient space for heat dissipation.
- The installation location meets the temperature and humidity requirements of the device.
- The power supply and required current are available in the installation location.

- The Ethernet cables have been deployed in the installation location.
- The selected power supply meets the system power requirements.
- The position of the indoor emergency power switch is found before installation, so that the power switch can be cut off in case of accidents.
- For a ceiling-mounted or wall-mounted AP, the mounting bracket dimensions and mounting hole pattern should meet the requirements. The following figure shows the mounting bracket dimensions.

Figure 3-2 Bracket Dimensions

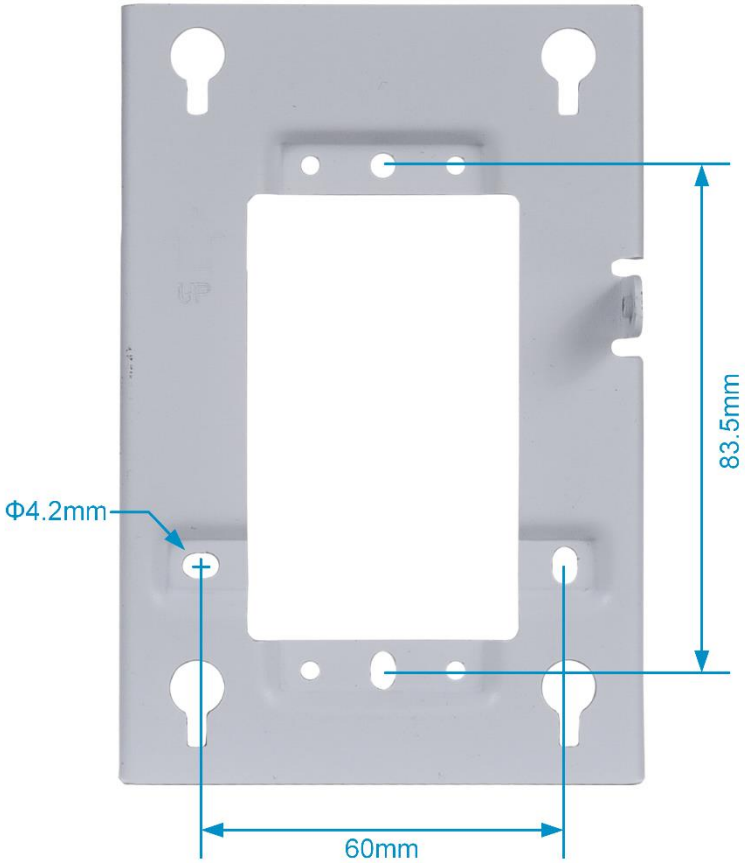

3.3 Precautions

To ensure the normal operation and prolonged service life of the AP, observe the following safety precautions:

- Do not power on the device during installation.
- Place the device in a well-ventilated environment.
- Do not subject the device to high temperatures.
- Keep the device away from high-voltage power cables.
- Install the device indoors.
- Do not expose the device in a thunderstorm or strong electric field.
- Keep the device clean and dust-free.
- Cut off the power switch before cleaning the device.

- Do not wipe the device with a damp cloth.
- Do not wash the device with liquid.
- Do not open the enclosure when the device is working.
- Fasten the device tightly.

3.4 Installing the Access Point

Caution

- When the AP is installed on an 86 mm junction box, the junction box must comply with the JB/T 8593-2013 standard and M4 metric screws must be used for installation.
- Use the provided M4 x 25 mm Philips pan-head screws for installation. If the depth of the junction box prevents the use of the 25 mm screws, you are advised to use M4 x 40 mm Philips pan-head screws for on-site installation.
- If an electric screwdriver is used for installation, the recommended torque value for screw tightening is 10±1kgf▪cm.

3.4.1 Installing the AP on a Wall

(1) Drill two holes at 83.5 mm (3.29 in) spacing on a wall. Tap two M5 wall anchors into the mounting holes. Drive the screws into the wall anchors to secure the mounting bracket to the wall. Keep the arrow on the mounting bracket facing up.

Figure 3-3 Securing the Mounting Bracket to a Wall

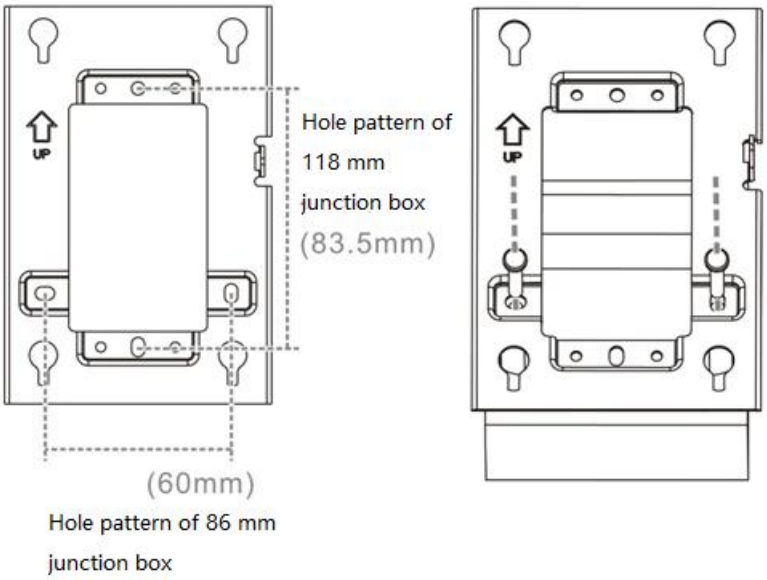

(2) Align the mounting posts on the rear of the AP over the mounting holes on the bracket.

Figure 3-4 Aligning the AP with the Mounting Bracket

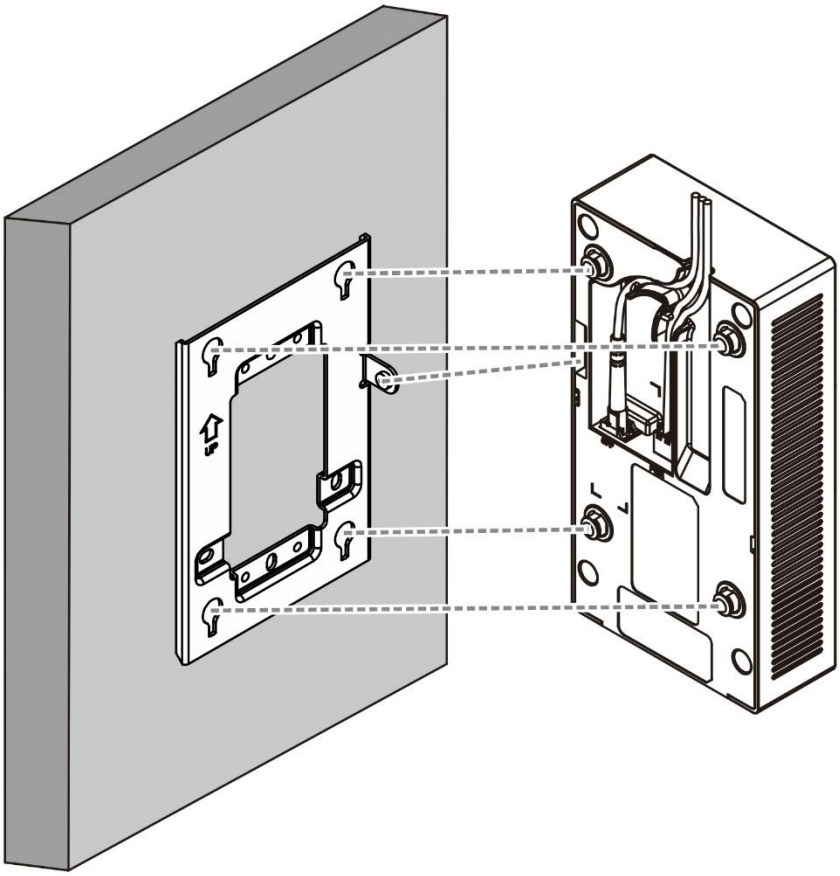

Caution

Install the Ethernet cable before sliding the AP into the mounting bracket.

(3) Slide the AP into the mounting bracket in the opposite direction against the arrow on the mounting bracket until the AP clicks into space.

Figure 3-5 Sliding the AP into the Mounting Bracket

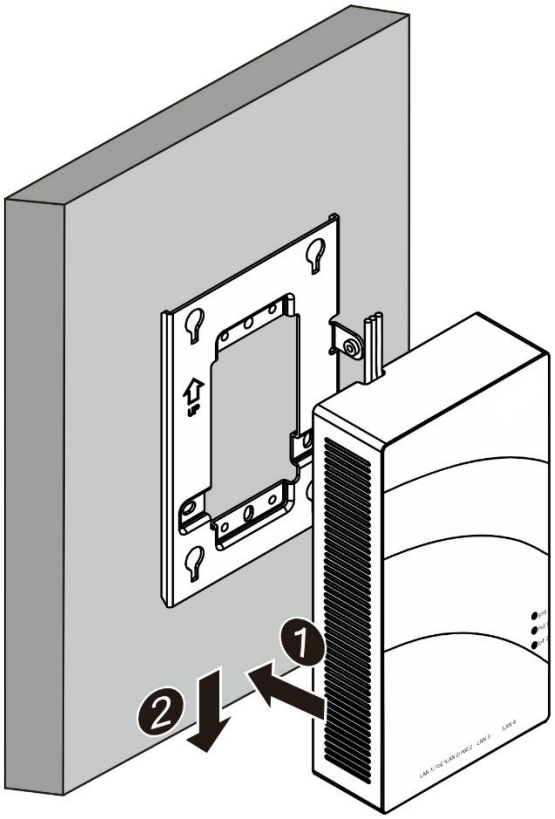

Caution

- Keep the **TS** logo on top when installing the AP on a wall.
- The AP can be installed in any of four directions on the mounting bracket depending on how you route the Ethernet cable.
- After installation, verify that the access point is secured properly.

3.4.2 Installing the AP on an 86 mm Junction Box

(1) Use a screwdriver to remove the panel of 86 mm junction box from the wall. (If there is no panel, ignore this step.)

Figure 3-6 Removing the Panel of the 86 mm Junction Box

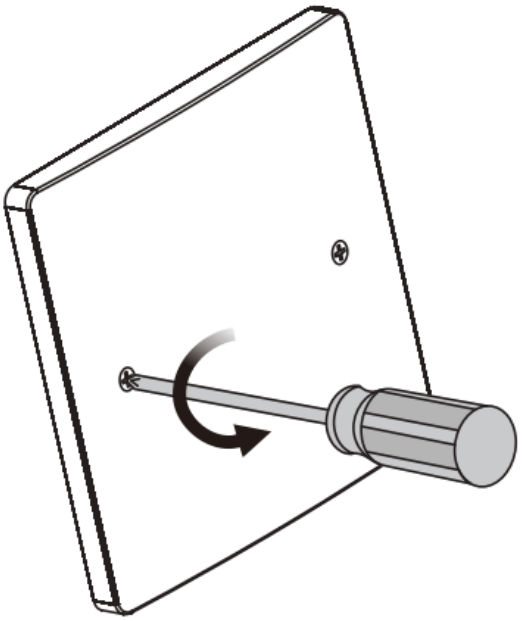

(2) Align the round groove holes on the left and right sides of the mounting bracket with the screw holes on the 86 mm junction box and use the two provided M4 x 25 mm machine screws to secure the mounting bracket on the 86 mm junction box.

Figure 3-7 Installing the Mounting Bracket

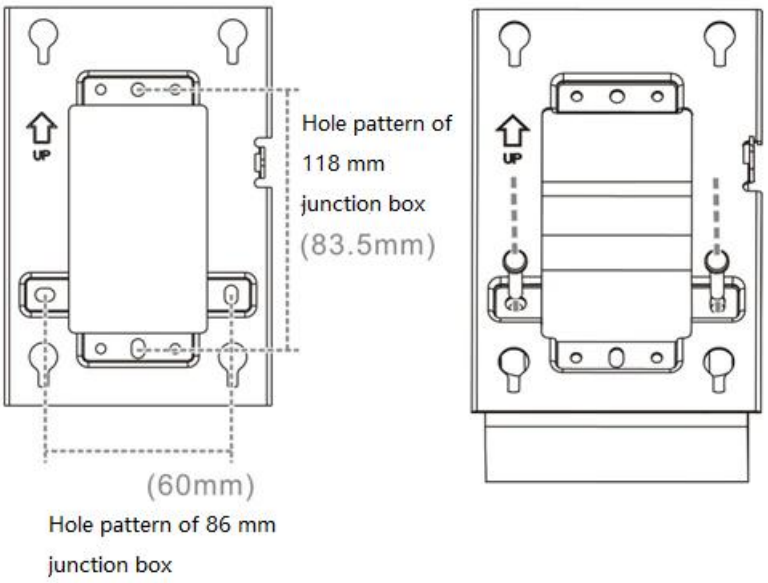

(3) Insert the optical fiber into the LC connector and connect the power plug of the power cord to the DC connector on the AP.

Figure 3-8 Connecting the Optical Fiber and Power Plug

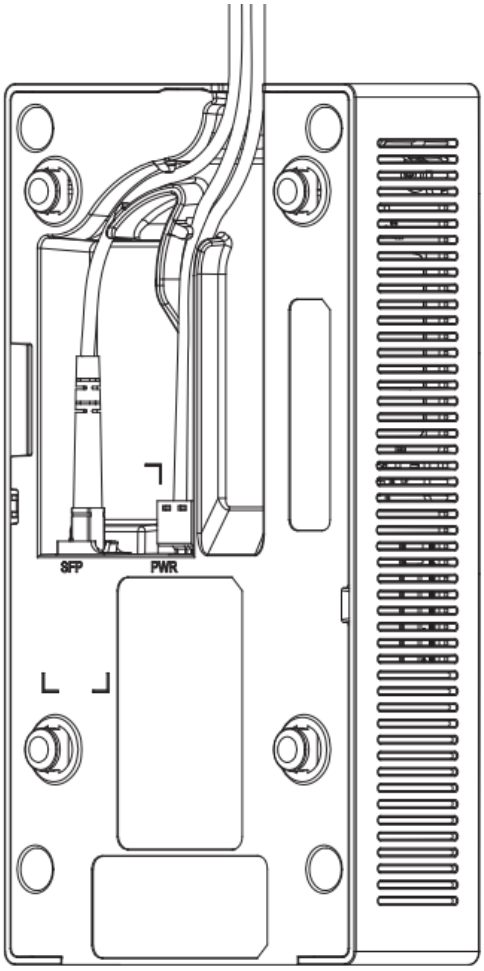

(4) Align the mounting posts on the rear of the AP over the mounting holes on the bracket. Slide the AP into the mounting bracket until the AP clicks into place.

Figure 3-9 Installing the AP

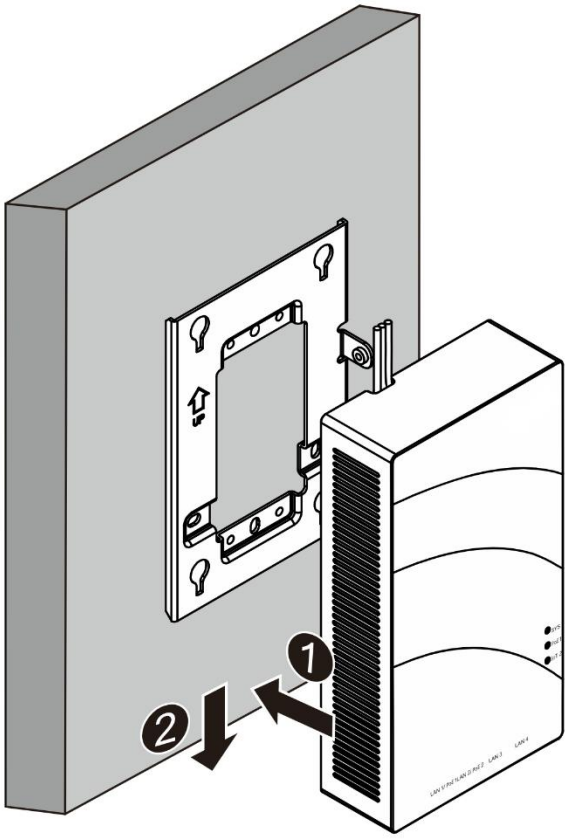

(5) Secure the AP to the mounting bracket using the provided M3 x 4 mm Torx machine screw.

Figure 3-10 Securing the AP to the Mounting Bracket

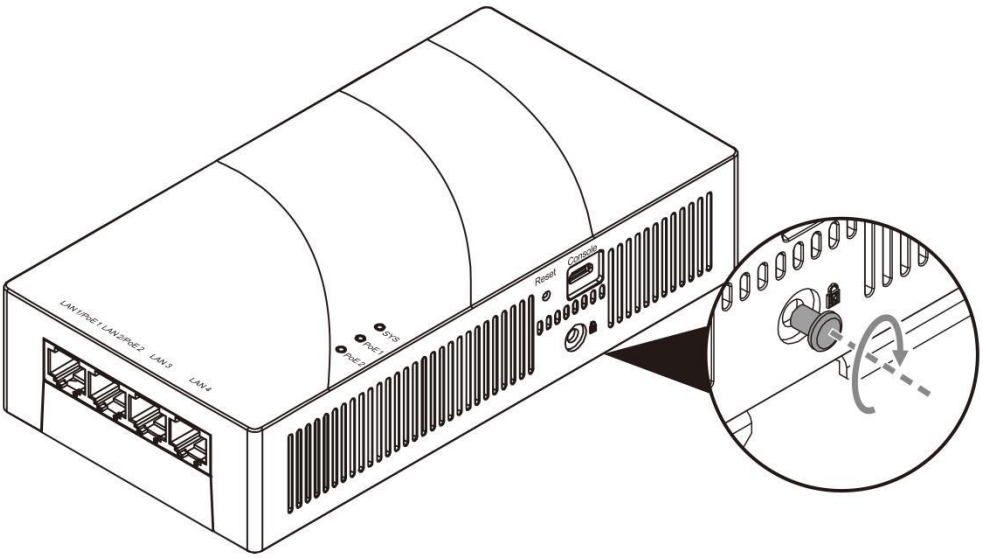

(6) The installation is completed.

Figure 3-11 Installation

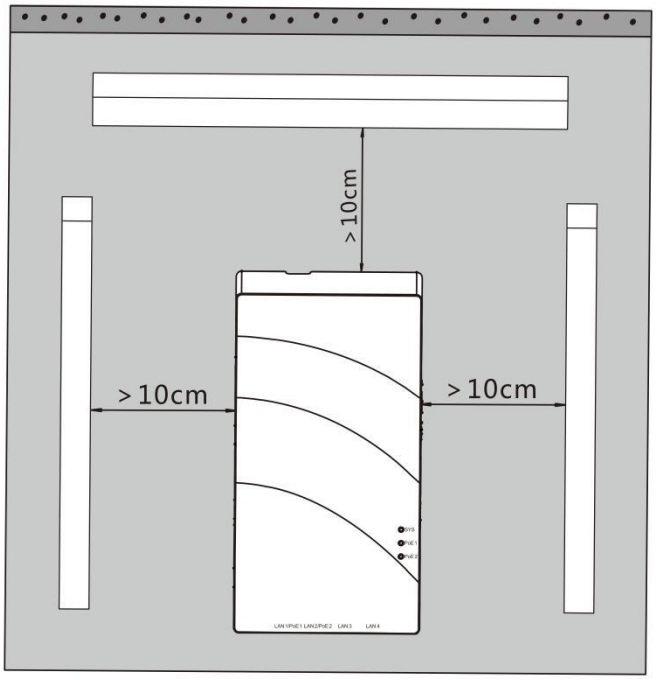

Caution

- Cut off power supply when installing or handling the AP.
- Ensure that the screws are secured properly.
- Ensure that the installation position facilitates LED status observation.

3.4.3 Removing the Access Point

(1) When the AP is installed on a wall, remove the screw on the right side of the AP using a T8 screwdriver.

Figure 3-12 Removing the Screw

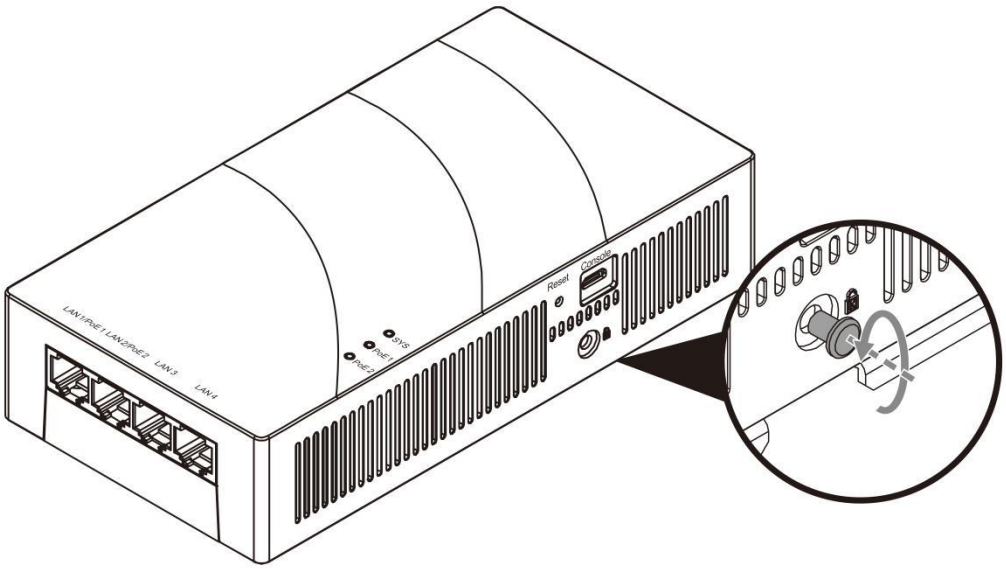

(2) Hold the AP in your hands and slide it sideways and away from the bracket.

Figure 3-13 Removing the AP

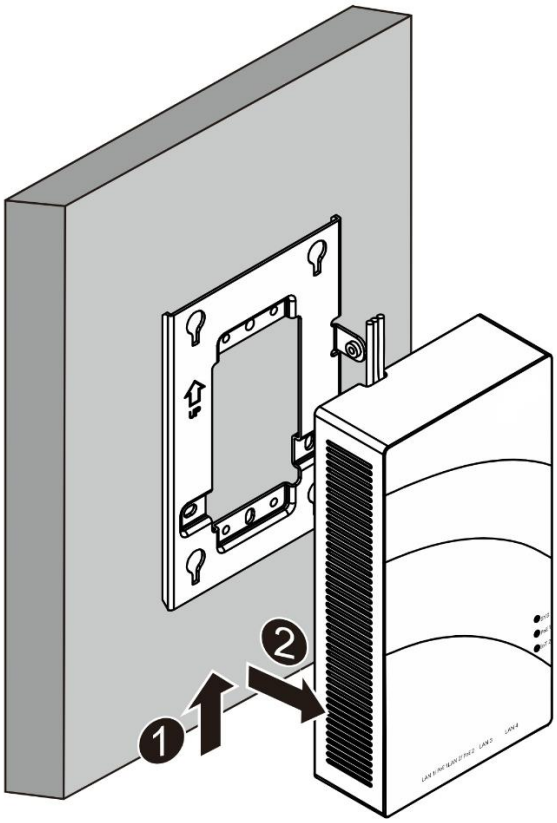

3.5 Connecting Cables

Connect a twisted pair cable to the LAN/PoE port of the AP. For details about the twisted pairs, see 7.1 Connectors and Media.

Caution

The console port of the AP supports a baud rate of 9600, data bits of 8, parity check (none), stop bit of 1, and flow control (none) by default. The parameters need to be set only when the AP is manually configured.

3.6 Bundling Cables

3.6.1 Precautions

- Bundle cables neatly to ensure aesthetics.
- Bend twisted pairs naturally or to a large radius close to the connector.
- Do not over tighten twisted pair bundle as it may reduce the cable life and performance.

3.6.2 Steps

(1) Bundle the hanging part of the twisted pairs using cable ties and lead them to the LAN/PoE port end of the AP by convenience.

(2) Fasten the twisted pair cables to the cable trough of the mounting bracket.

(3) When bundling the twisted pair cables, extend them under the AP and maintain a straight line.

3.7 Checklist After Installation

3.7.1 Checking the AP

- Check whether the external power supply matches the AP.
- Ensure that the AP is securely installed and will not move or fall.

3.7.2 Checking Cable Connection

- Verify that the twisted pair cable matches the port.
- Verify that cables are properly bundled.

3.7.3 Checking the Power Supply

- Verify that the power cord is properly connected and compliant with safety requirements.
- Turn on the power supply to supply power to the AP. Verify that the AP works properly.

4 Verifying Operating Status

4.1 Establishing the Configuration Environment

Use a DC power adapter to power the AP.

When setting up the environment, pay attention to the following:

- Verify that the AP is properly connected to the power source.
- Connect the AP to a switch through a twisted pair cable.
- When the AP is connected with a PC, verify that the PC and PoE switch are properly grounded.

4.2 Powering on the AP

4.2.1 Checklist Before Power-on

- Check whether the power cord is properly connected.
- Check whether input voltage meets the requirement of the AP.

4.2.2 Checklist After Power-on

After power-on, you are advised to check the following to ensure the normal operation of the AP:

- Check whether there are system logs printed on the terminal interface.
- Check whether the LEDs are normal.

5 Monitoring and Maintenance

5.1 Monitoring

5.1.1 LEDs

You can observe the LEDs to monitor the device in operation.

5.1.2 CLI Commands

You can run related commands on the CLI of the device to remotely monitor the device, including:

- Port configuration and status
- System logs

Note

- For details about the commands, see the corresponding configuration guide.
- The AP supports remote maintenance.

5.2 Remote Maintenance

- If the AP works in fat mode, you can log in to the AP remotely for maintenance.
- If the AP works in fit mode, you can use an AC to centrally manage and maintain the AP.

5.3 Hardware Maintenance

If the hardware is faulty, please contact TS technical support.

6 Common Troubleshooting

6.1 General Troubleshooting Flowchart

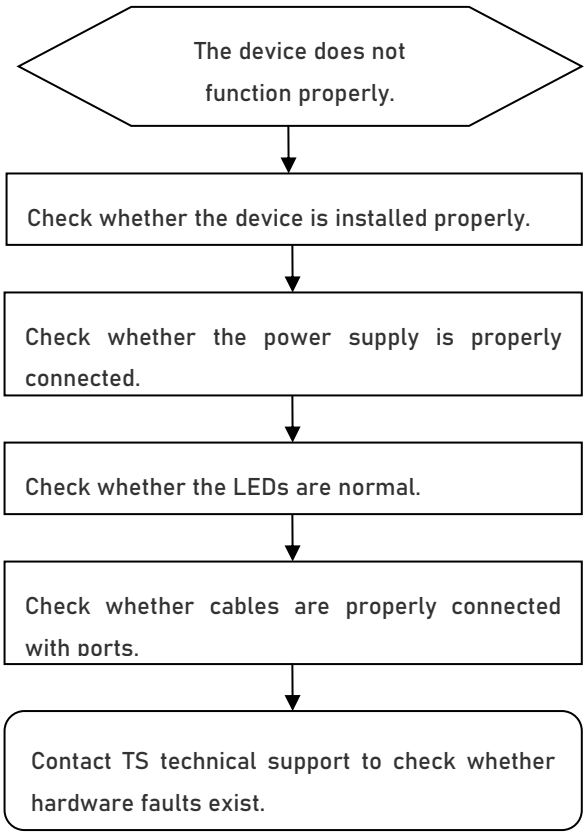

6.2 Common Faults

6.2.1 Ethernet Port Is Not Working After the Ethernet Cable Is Plugged In

Verify that the device at the other end of the Ethernet cable is working properly. And then verify that the Ethernet cable is capable of providing the required data rate and is properly connected.

6.2.2 LED Is Off for a Long Time

- If the system status LED is off for a long time: when the AP adopts DC power supply, verify that the power supply can meet the maximum power consumption requirement of the AP and check whether the power supply is normal.
- If the IoT LED is off: verify that the LAN port is connected to an IoT device that needs to be powered by the AP. If the hardware link and IoT device function properly, check whether the power output function of the AP is enabled.

6.2.3 LED Is Solid Red

The LED keeps solid red for a long time, indicating that the Ethernet port is not connected. Verify the Ethernet connection.

6.2.4 LED Is Solid Green

The device performs initialization after power-on. During this period, the LED keeps solid green and does not turn normal blue until the initialization is completed. Note: If the solid green persists for an hour, it indicates that the device initialization fails and the device is faulty.

6.2.5 LED Keeps Fast Blinking Green (in Fit Mode)

Sometimes the AP performs software upgrade after power-on. During this period, the LED keeps fast blinking green and does not turn slow blinking green until the upgrade is completed. Note: Do not plug or unplug the power cord when the LED is fast blinking as software upgrade takes time. If the fast blinking persists for ten minutes, it indicates that the device fails to complete software upgrade and is faulty.

6.2.6 LED Turns Slow Blinking Red

If the LED turns slow blinking red after the system starts, the AP probably has not established a proper CAPWAP connection with the AC. Verify that the AC is operational and configured properly.

6.2.7 Clients Can Not Find the Access Point

(1) Verify that the AP is properly powered.

(2) Verify that the Ethernet port is correctly connected.

(3) Verify that the AP is correctly configured.

(4) Move client devices closer to the AP.

7 Appendix

7.1 Connectors and Media

- 1000BASE-T/100BASE-TX/10BASE-T port

The 1000BASE-T/100BASE-TX/10BASE-T port is a 10/100/1000 Mbps auto-sensing port that supports auto MDI/MDIX Crossover.

Compliant with IEEE 802.3ab, the 1000BASE-T port requires 100-ohm Category 5/5e UTP or STP with a maximum distance of 100 meters.

The 1000BASE-T port requires all four pairs of wires be connected for data transmission. The following figure shows the four pairs of wires for the 1000BASE-T port.

Table 7-1 1000BASE-T Twisted Pair Connections

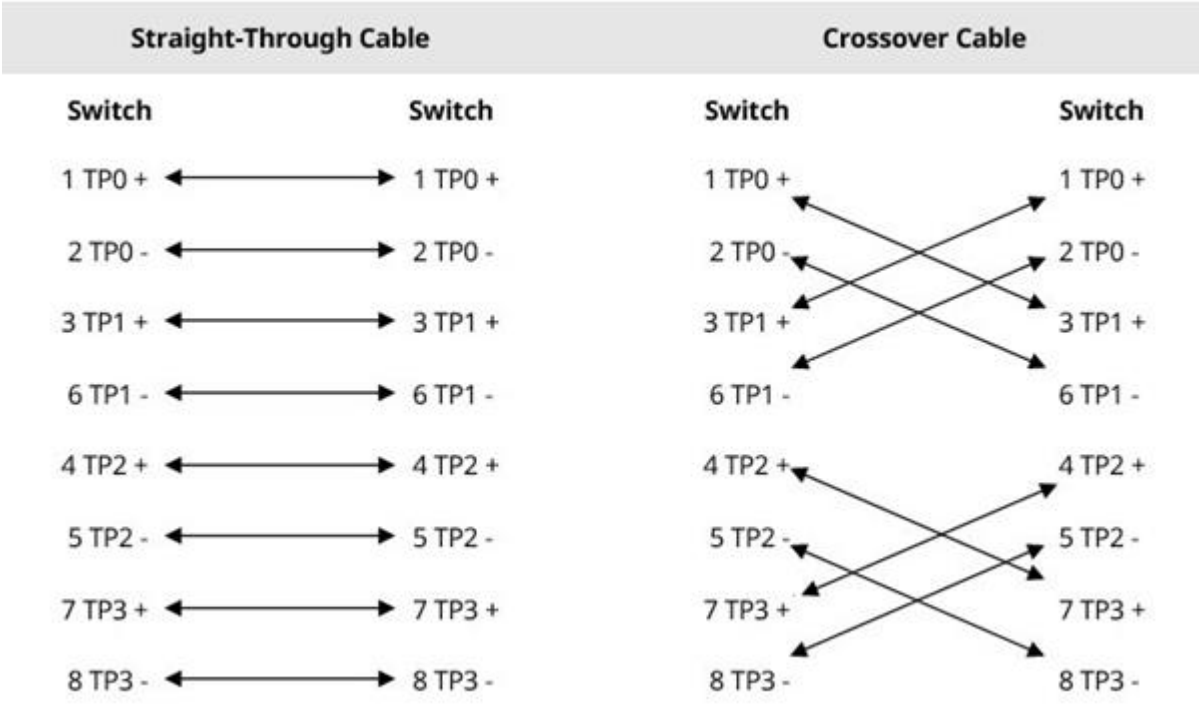

10BASE-T uses 100-ohm Category-3/4/5 UTP or STP, and 100BASE-TX uses 100-ohm Category-5 UTP or STP for connections. Both support a maximum length of 100 meters. Both support a maximum length of 100 meters. The following table shows 100BASE-TX/10BASE-T pin assignments.

Table 7-2 100BASE-TX/10BASE-T Pin Assignments

Pin	Socket	Plug
1	Input Receive Data+	Output Transmit Data+
2	Input Receive Data-	Output Transmit Data-
3	Output Transmit Data+	Input Receive Data+

Pin	Socket	Plug
6	Output Transmit Data-	Input Receive Data-
4, 5, 7, 8	Not Used	Not Used

The following figure shows wiring of straight-through and crossover cables for 100BASE-TX/10BASE-T.

Table 7-3 100BASE-TX/10BASE-T Twisted Pair Connections

7.2 Cabling Recommendations

During installation, route cable bundles upward or downward along the sides of the rack depending on the actual situation in the equipment room. All cable connectors should be placed at the bottom of the cabinet rather than be exposed outside of the cabinet. Power cords are routed beside the cabinet, and top cabling or bottom cabling is adopted according to the actual situation in the equipment room, such as the positions of the DC power distribution box, AC socket, or lightning protection box.

- Requirement for the Minimum Cable Bend Radius
  - The bend radius of a fixed power cord, network cable, or flat cable should be over five times greater than their respective diameters. The bend radius of these cables that are often bent or plugged should be over seven times greater than their respective diameters.
  - The bend radius of a fixed common coaxial cable should be over seven times greater than its diameter. The bend radius of the common coaxial cable that is often bent or plugged should be over 10 times greater than its diameter.
  - The minimum bend radius of a high-speed cable, such as an SFP+ cable should be over five times the overall diameter of the cable. If the cable is frequently bent, plugged or unplugged, the bend radius should be over 10 times the overall diameter.
- Precautions for Cable Bundling
  - Before cables are bundled, mark labels and stick the labels to cables wherever appropriate.
  - Cables should be neatly and properly bundled in the cabinet without twisting or bending, as shown in Figure 7-1.

Figure 7-1 Bundling Cables

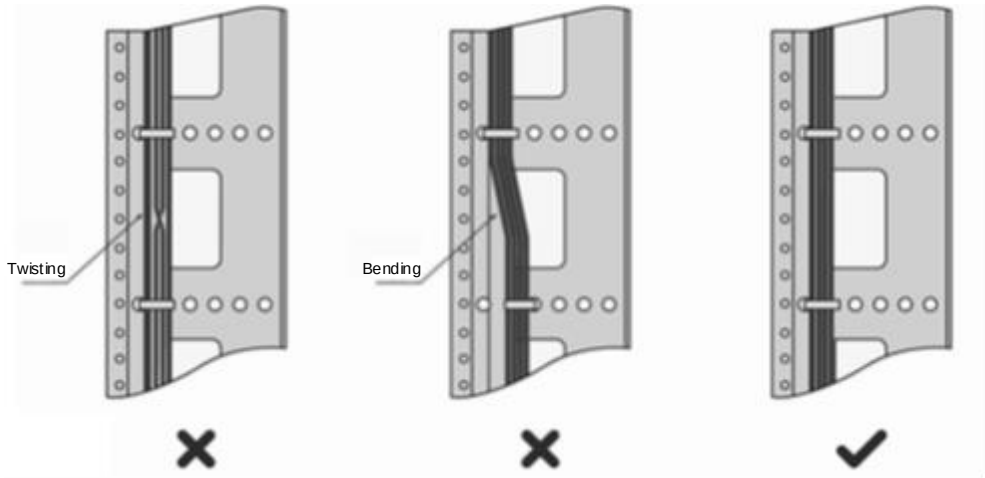

  - Cables of different types (such as power cables, signal cables, and ground cables) should be separated in cabling and bundling. Mixed bundling is not allowed. When they are close to each other, it is recommended that crossover cabling be adopted. In the case of parallel cabling, maintain a minimum distance of 30 mm between power cords and signal cables.
  - The cable management brackets and cabling troughs inside and outside the cabinet should be smooth without sharp corners.

- The metal hole traversed by cables should have a smooth and fully rounding surface or an insulated lining.
- Use cable ties to bundle up cables properly. Please do not connect two or more cable ties to bundle up cables.
- After bundling up cables with cable ties, cut off the remaining part. The cut should be smooth and trim, without sharp corners, as shown in Figure 7-2.

Figure 7-2 Cutting off Excess Cable Tie

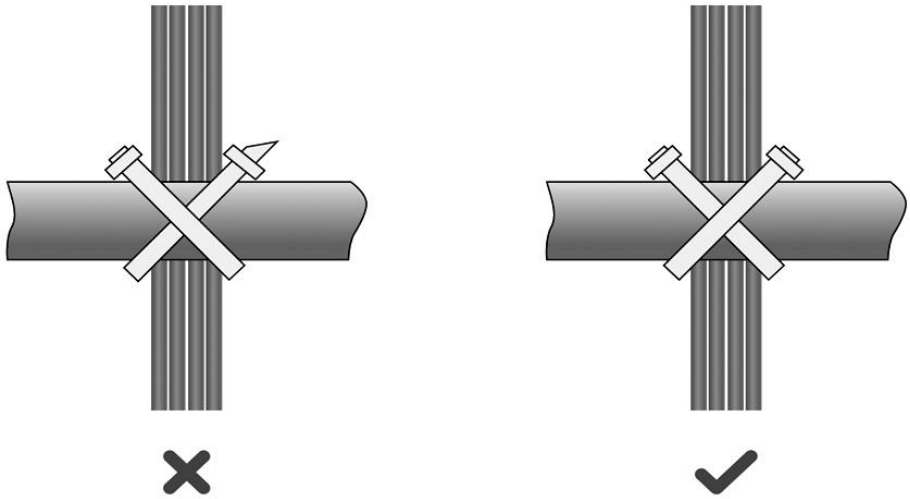

- When cables need to be bent, bind them first but do not tie cable ties within the bend. Otherwise, stress may be generated on the cables and cause the wires inside to break, as shown in Figure 7-3.

Figure 7-3 Binding Cables

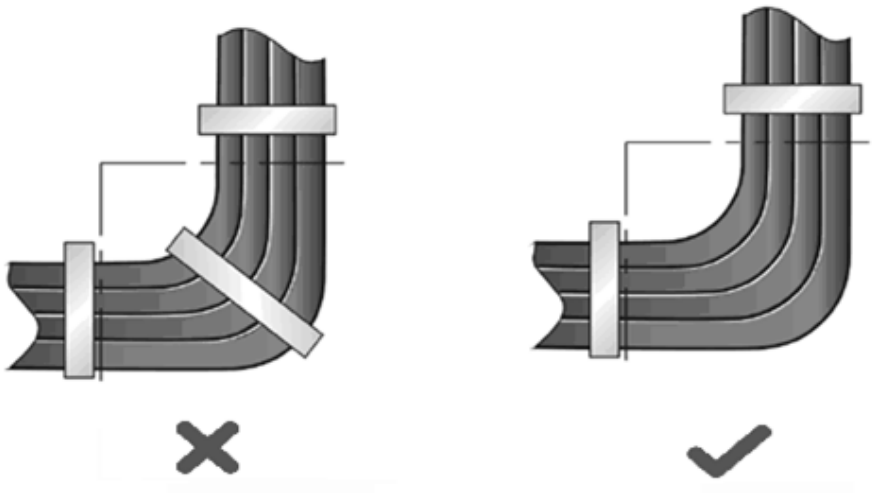

- Cables not to be assembled or remaining parts of cables should be folded and placed in a proper position of the cabinet or cable trough. The proper position indicates a position that does not affect device running or damage the device or cable during debugging.
- 220 V and –48 V power cables must not be bundled on the guide rails of moving parts.
- The power cables connecting moving parts such as door grounding wires should be reserved with some access after being assembled to avoid suffering tension or stress. When a moving part reaches the

installation position, the remaining cable part should not touch heat sources, sharp corners, or sharp edges. If heat sources cannot be avoided, high-temperature cables should be used.

- When screw threads are used to fasten cable terminals, the bolt or screw must be tightly fastened, and anti-loosening measures should be taken, as shown in Figure 7-4.

Figure 7-4 Fastening Cable Lugs

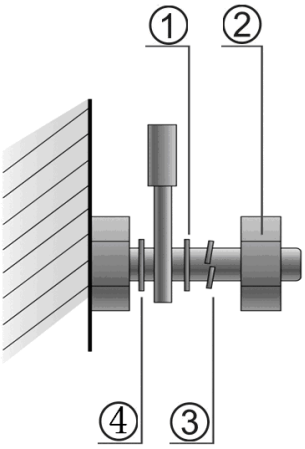

Remarks	① Flat washer ② Nut	③ Spring washer ④ Flat washer

- Hard power cords should be fastened in the terminal connection area to prevent stress on terminal connection and cable.
- Do not use self-tapping screws to fasten terminals.
- Power cords of the same type and in the same cabling direction should be bundled up into cable bunches, with cables in cable bunches clean and straight.
- Bundle up cables by using cable ties based on the following table.

Cable Bunch Diameter (mm)	Distance Between Every Binding Point (mm)
10	80–150
10–30	150–200
30	200–300

- No knot is allowed in cabling or bundling.
- For wiring terminal blocks (such as circuit breakers) with cord end terminals, the metal part of the cord end terminal should not be exposed outside the terminal block when assembled.

7.3 Optical Modules and Specifications

We provide appropriate optical modules according to the port types. You can select the module to suit your specific needs. The optical module types and corresponding specifications are provided for reference.

Table 7-4 SFP Modules and Specifications

Wavelength (nm)	Fiber Type	DDM	Intensity of Transmitted Light (dBm)		Intensity of Received Light (dBm)	
			Min.	Max.	Min.	Max.
1310 Tx/1550 Rx	SMF	Not supported	–9	–3	N/A	–18

Table 7-5 SFP Module Cabling Specifications

Port Type	Fiber Type	Core Specification (μm)	Max. Cabling Distance
LC	SMF	9/125	0.3 km

Caution

- For optical modules with a maximum cabling distance of over 40 km (including 40 km), install an optical attenuator to avoid overload when using short-distance SMFs.
- The optical module is a laser device. Please do not look into the laser beam directly.
- To keep the optical module clean, make sure that the unused ports remain capped.

Table 7-6 Pairing Description of the BIDI Optical Module

Rate/Distance	Pairing Model
1000M/0.3 km	TSB-3GM3-35DCR (1310/1550) TSB-3GM3-53DCR (1550/1310)

Caution

The BIDI optical modules at both ends must be paired for use. For example, if TSB-3GM3-35DCR is used at one end, TSB-3GM3-53DCR must be used at the other end.

7.4 DC Connector Specifications

Input voltage: 48 V DC; rated current: 0.6 A

Table 7-7 DC Connector Specifications

Distance Between Holes	Terminal Width	Insertion Depth	Polarity
3.81 mm	8.42 mm	6.8 mm	Reverse connection is supported. It is recommended that the positive pole is on the left, and the negative pole is on the right.

Figure 7-5 DC Connector

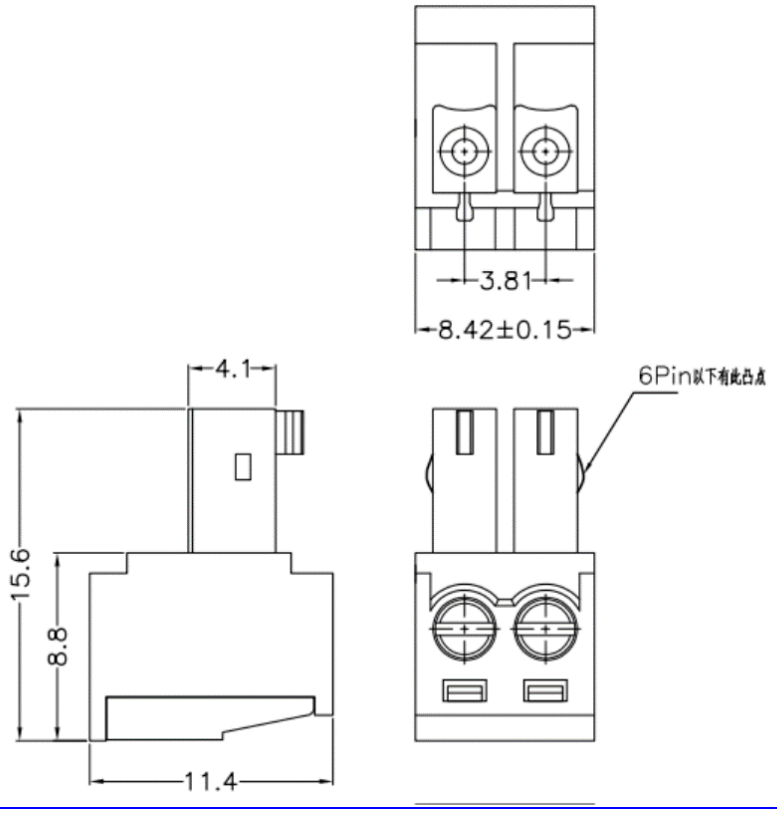

FCC STATEMENT

This device complies with Part 15 of the FCC Rules. Operation is subject to the following two conditions:

(1) This device may not cause harmful interference, and

(2) This device must accept any interference received, including interference that may cause undesired operation.

This equipment has been tested and found to comply with the limits for a Class B digital device, pursuant to part 15 of the FCC Rules. These limits are designed to provide reasonable protection against harmful interference in a residential installation. This equipment generates, uses and can radiate radio frequency energy and, if not installed and used in accordance with the instructions, may cause harmful interference to radio communications. However, there is no guarantee that interference will not occur in a particular installation. If this equipment does cause harmful interference to radio or television reception, which can be determined by turning the equipment off and on, the user is encouraged to try to correct the interference by one or more of the following measures:

—Reorient or relocate the receiving antenna.

—Increase the separation between the equipment and receiver.

—Connect the equipment into an outlet on a circuit different from that to which the receiver is connected.

—Consult the dealer or an experienced radio/ TV technician for help.

Operations in the 5.15-5.35GHz band are restricted to indoor usage only.

FCC Radiation Exposure Statement:

This equipment complies with FCC radiation exposure limits set forth for an uncontrolled environment. In order to avoid the possibility of exceeding the FCC radio frequency exposure limits, Human proximity to the antenna shall not be less than 20cm(8 inches)during normal operation.

It changes or modifications not expressly approved by the party responsible for compliance could void the user's authority to operate the equipment.

ISED Statement

English: This device contains licence-exempt transmitter(s)/receiver(s) that comply with Innovation, Science and Economic Development Canada's licence-exempt RSS(s).

Operations in the 5.15-5.35GHz band are restricted to indoor usage only.

Operation is subject to the following two conditions:
(1) This device may not cause interference.

(2) This device must accept any interference, including interference that may cause undesired operation of the device.

The digital apparatus complies with Canadian CAN ICES-3 (B)/NMB-3(B).

French: Cet appareil contient des émetteurs/récepteurs exempts de licence qui sont conformes aux RSS exemptés de licence d'Innovation, Sciences et Développement économique Canada.

L'exploitation est soumise aux deux conditions suivantes :
(1) Cet appareil ne doit pas provoquer d'interférences.

(2) Cet appareil doit accepter toute interférence, y compris les interférences susceptibles de provoquer un fonctionnement indésirable de l'appareil.

l'appareil numérique du ciem conforme canadien peut - 3 (b) / nmb - 3 (b).

This device meets the exemption from the routine evaluation limits in section 2.5 of RSS 102 and compliance with RSS 102 RF exposure, users can obtain Canadian Information

on RF exposure and compliance.

cet appareil est conforme à l'exemption des limites d'évaluation courante dans la section 2.5 du cnr - 102 et conformité avec rss 102 de l'exposition aux rf, les utilisateurs peuvent obtenir des données canadiennes sur l'exposition aux champs rf et la conformité.

This equipment complies with Canada radiation exposure limits set forth for an uncontrolled environment.

Cet équipement est conforme aux limites d'exposition aux rayonnements du Canada établies pour un environnement non contrôlé.

This equipment should be installed and operated with minimum distance 20cm between the radiator & your body.

Cet équipement doit être installé et utilisé à une distance minimale de 20 cm entre le radiateur et votre corps.