EXD-2425515909VH-70-5MHF (AP680CD) Antenna test report

一、 VSWR and Isolation

2.4G Antenna VSWR and Isolation

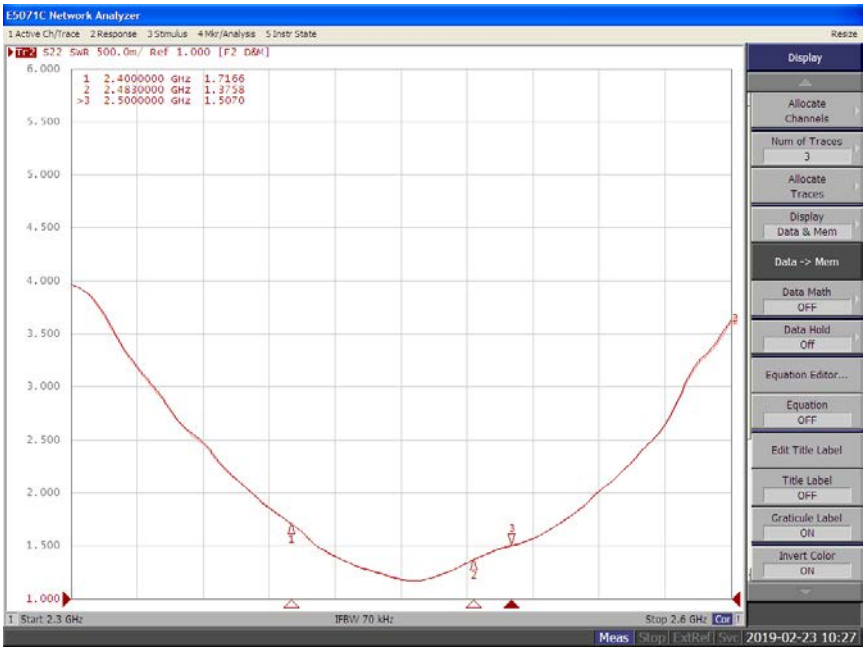

BT Antenna VSWR

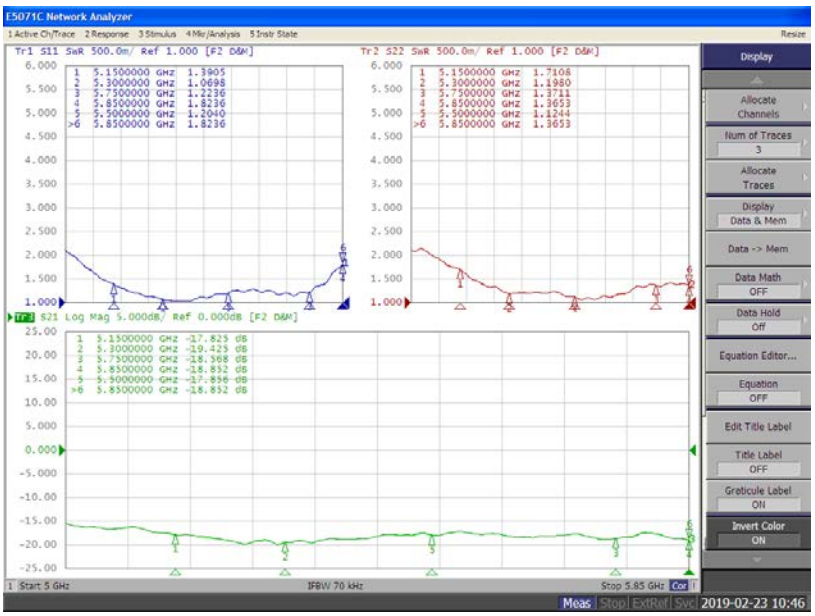

5G Antenna VSWR and Isolation

二、2D Directions

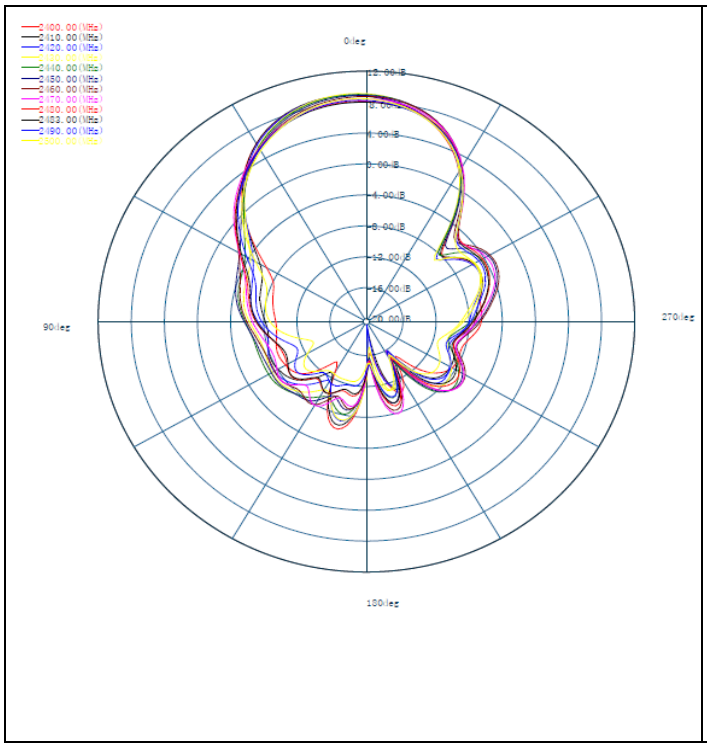

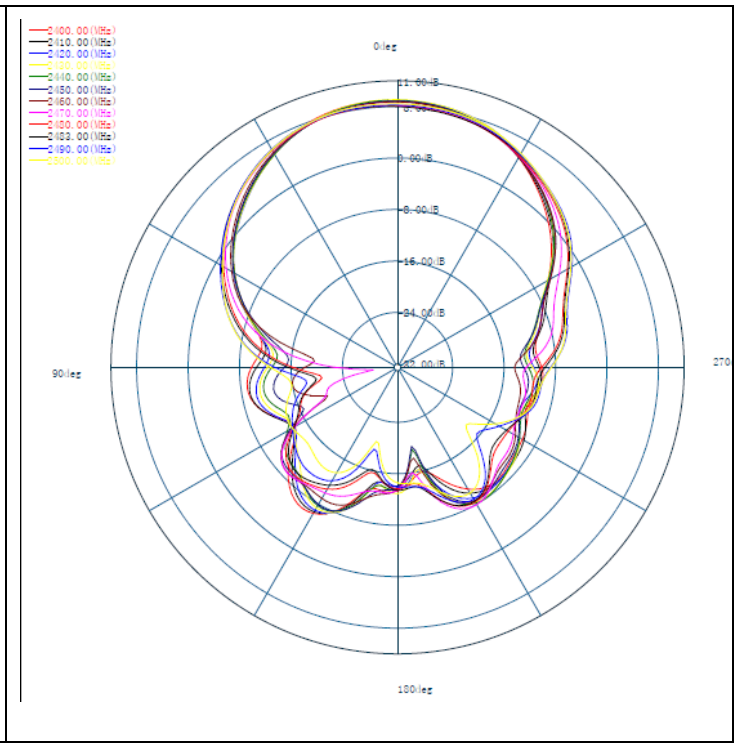

2.4G Antenna1,Phi=0 Degree， 2D	2.4G Antenna1,Phi=90 Degree， 2D
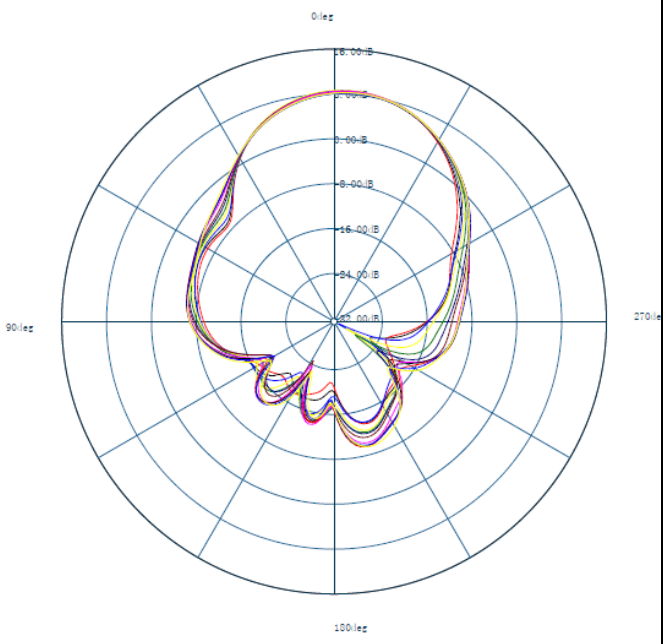	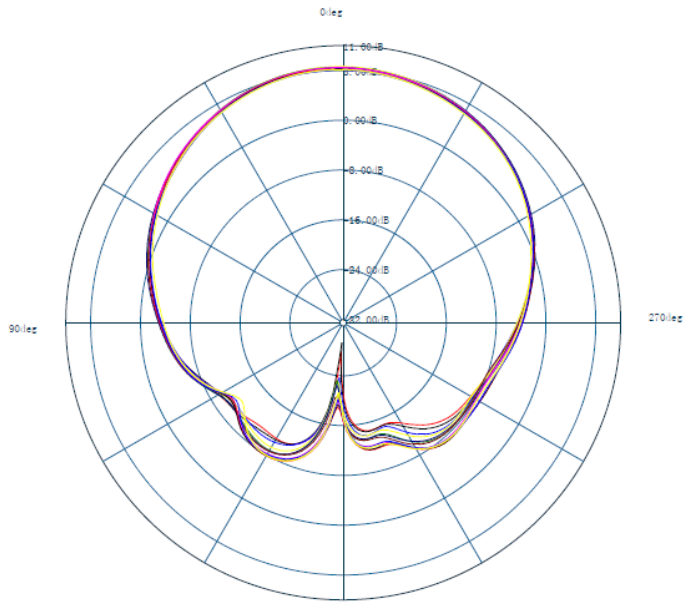
2.4G Antenna2,Phi=0 Degree， 2D	2.4G Antenna2,Phi=90 Degree， 2D
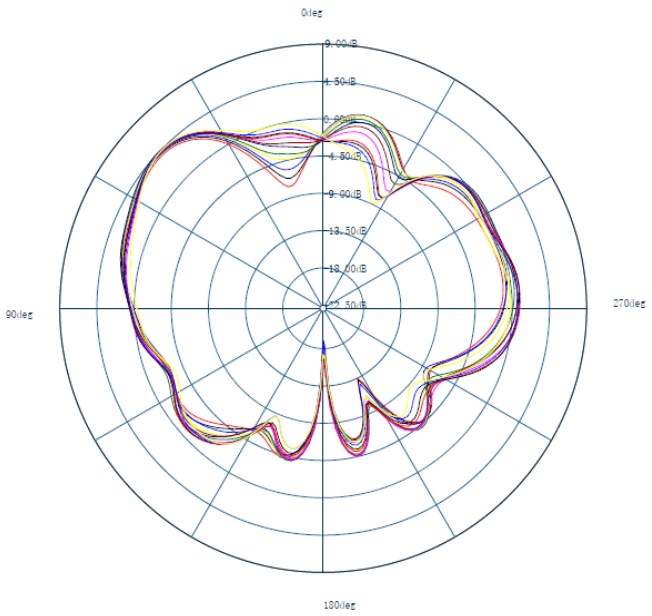	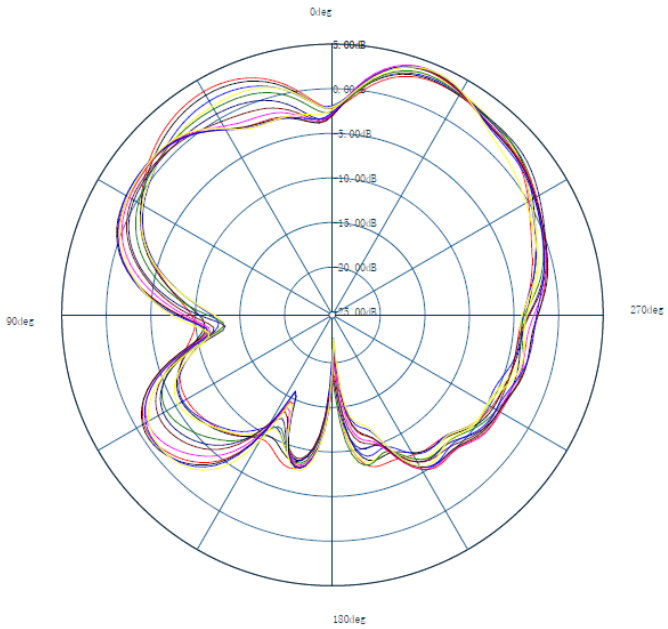
BTAntenna,Phi=0 Degree， 2D	BTAntenna,Phi=90 Degree， 2D

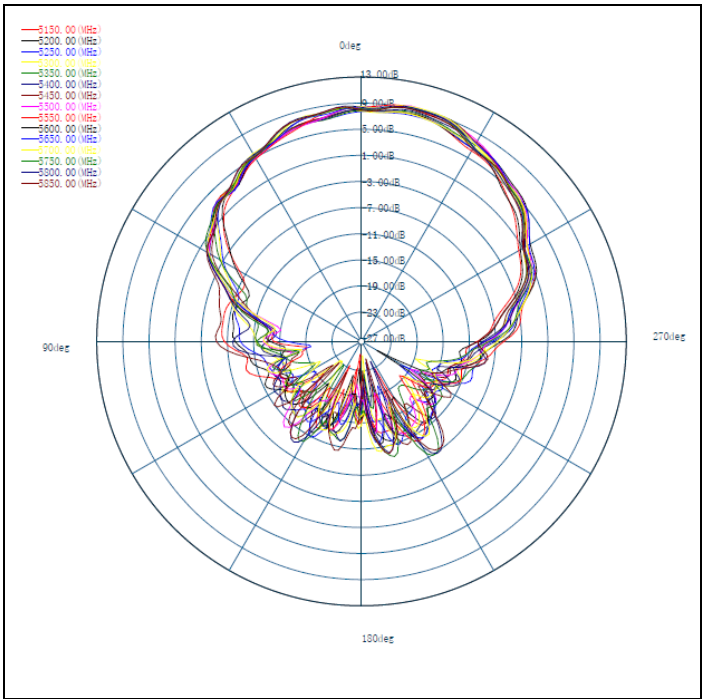

5G Antenna1,Phi=0 Degree，2D

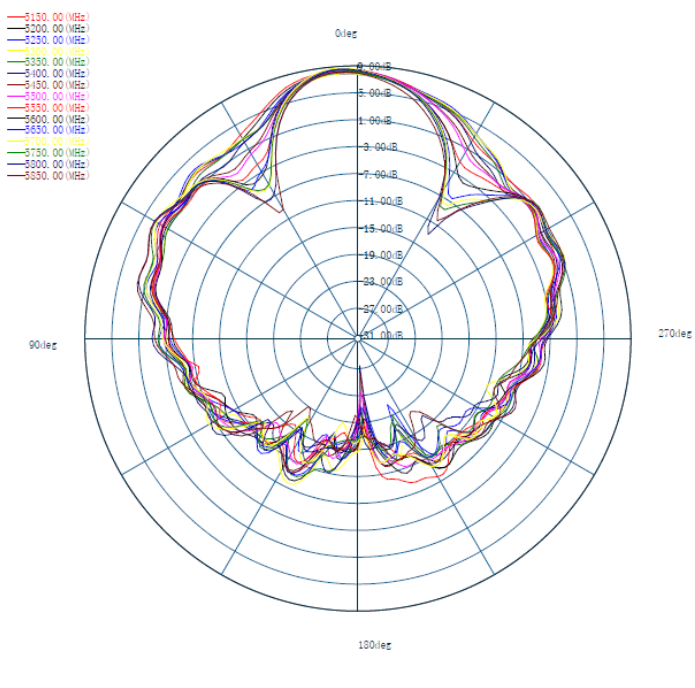

5G Antenna 1,Phi=90 Degree，2D

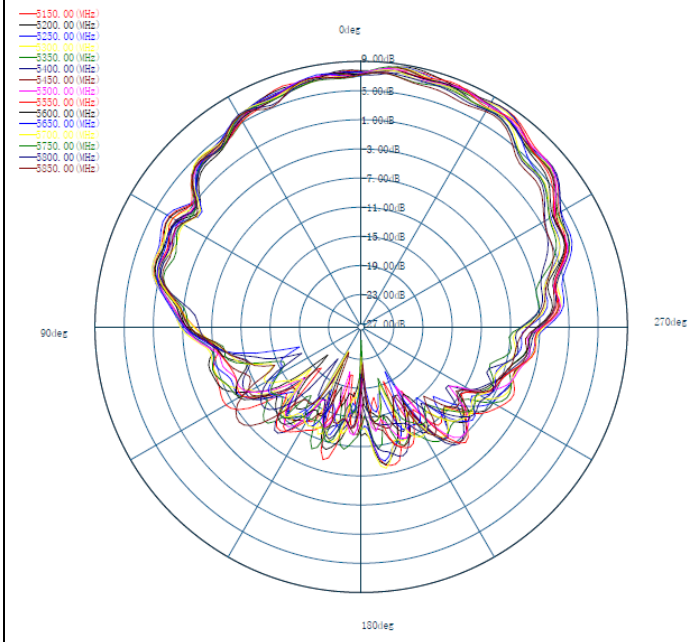

5G Antenna2,Phi=0 Degree，2D

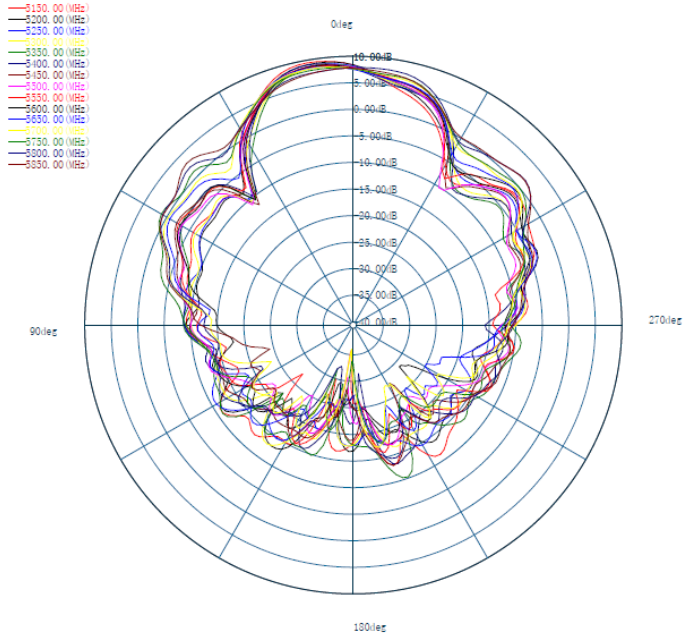

5G Antenna2,Phi=90 Degree，2D

三、3D Directions

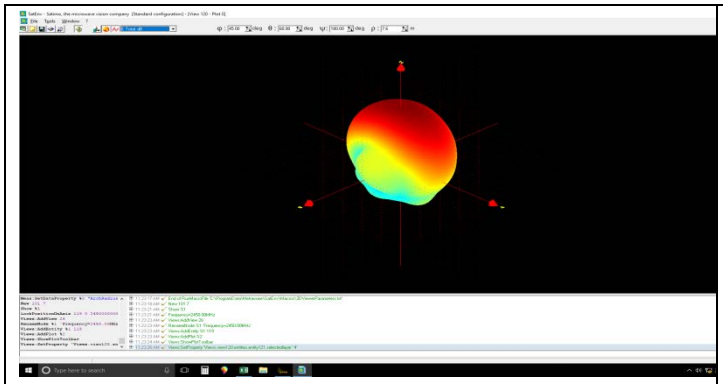	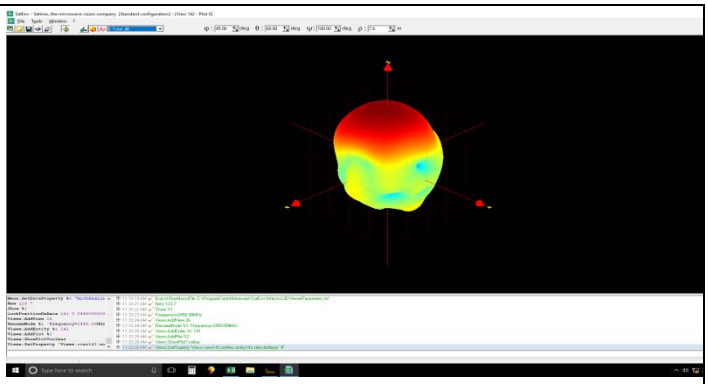
2.4G Antenna1，3D	2.4G Antenna2, 3D
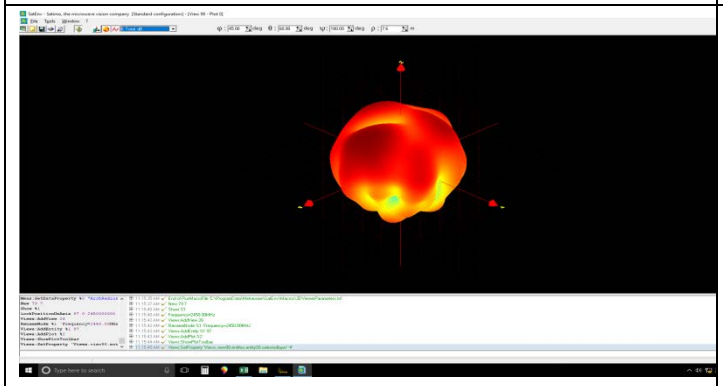	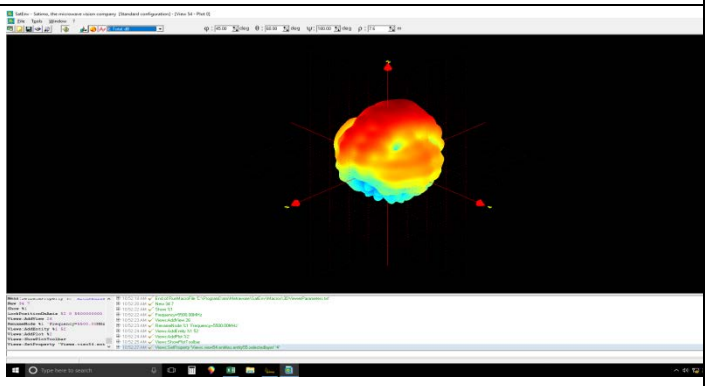
BT Antenna，3D	5G Antenna1, 3D
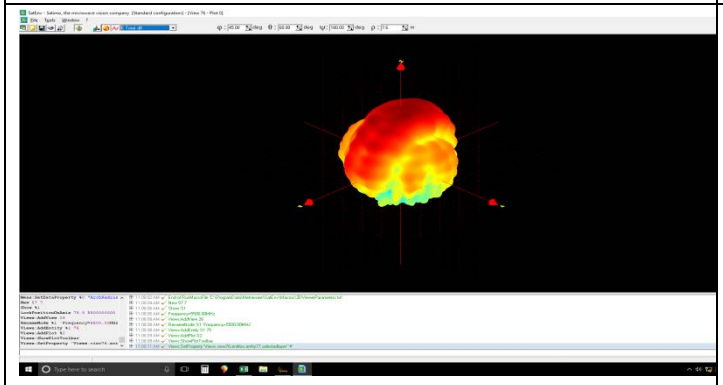	
5G Antenna 2, 3D	

Confidential documents shall not be disseminated without permission

四、Gain and Radiation angle

Frequency (MHZ)	5G Antenna1			5G Antenna2		
	Gain (dbi)	phi=0	phi=90	Gain (dbi)	phi=0	phi=90
5150	8.997332	60.11 deg	40.60 deg	8.551401	77.41 deg	26.97 deg
5200	8.863338	61.65 deg	40.62 deg	8.634852	77.87 deg	25.98 deg
5250	8.910272	59.20 deg	42.79 deg	8.70005	78.60 deg	29.32 deg
5300	8.840002	63.46 deg	41.13 deg	8.791593	83.65 deg	35.94 deg
5350	8.914287	58.89 deg	41.05 deg	8.614138	80.36 deg	37.27 deg
5400	8.982182	57.20 deg	37.18 deg	8.639331	73.89 deg	38.06 deg
5450	8.869632	58.45 deg	33.31 deg	8.689307	81.94 deg	37.51 deg
5500	8.826823	51.45 deg	30.93 deg	8.995383	81.80 deg	35.59 deg
5550	8.921425	55.03 deg	29.59 deg	8.943094	78.47 deg	37.62 deg
5600	8.712144	54.96 deg	29.15 deg	8.927175	62.61 deg	36.97 deg
5650	8.582335	55.15 deg	27.56 deg	8.981928	82.27 deg	39.38 deg
5700	8.748848	51.46 deg	26.97 deg	8.865627	75.04 deg	41.51 deg
5750	8.823439	50.87 deg	27.10 deg	8.839064	73.52 deg	40.45 deg
5800	8.974235	56.41 deg	26.50 deg	8.598104	72.13 deg	41.23 deg
5850	8.875829	52.41 deg	26.47 deg	8.727624	74.49 deg	41.90 deg

Frequency (MHZ)	2.4G Antenna1			2.4G Antenna2			BT Antenna	
	Gain dbi)	phi=0	phi=90	Gain dbi)	phi=0	phi=90	Eff	Gain (dbi)
2400	8.54593	38.58 deg	75.58 deg	8.95774	45.33 deg	51.53 deg	66.76%	4.451452
2420	9.00218	39.50 deg	75.04 deg	8.93288	46.19 deg	51.21 deg	67.03%	4.483436
2440	8.56993	39.77 deg	76.54 deg	8.92688	47.03 deg	50.69 deg	75.64%	4.500008
2460	8.53362	40.64 deg	75.27 deg	8.99814	47.06 deg	51.64 deg	74.62%	4.493224
2480	8.24839	41.15 deg	77.94 deg	8.85158	49.43 deg	57.86 deg	79.72%	4.418189
2483	8.12274	41.65 deg	79.15 deg	8.86549	49.62 deg	59.48 deg	78.62%	4.407239
2500	8.30666	41.66 deg	75.80 deg	8.82388	44.09 deg	62.55 deg	71.86%	4.311737

Exceltek Electronics Technology (DG) Co., Ltd http://www.exceltek.com.cn
Confidential documents shall not be disseminated without permission

REV	DESCRIPTION	DATE
01	DRAWING RECEIVED	2019.01.24

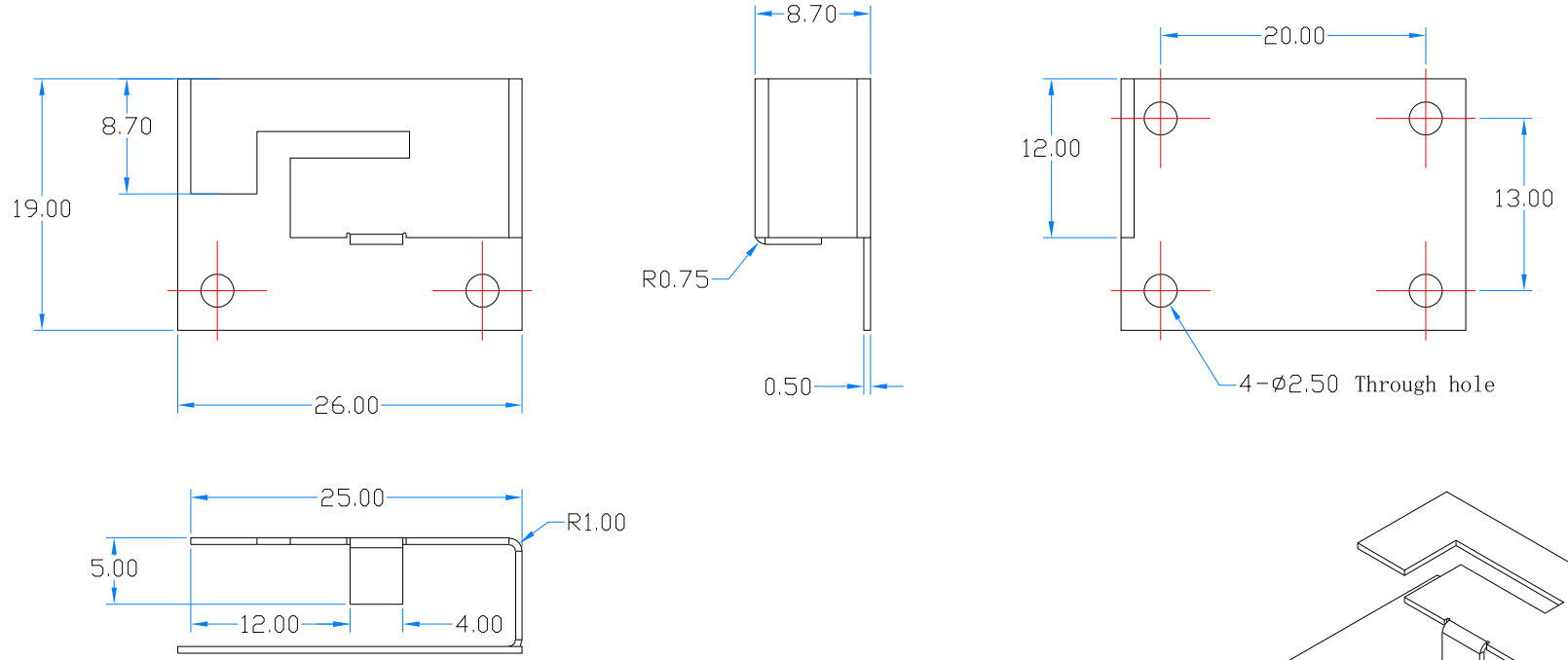

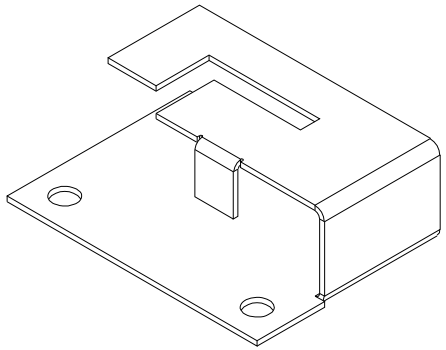

NOTES:

1、Material: SUS430 nickel plating, surface can not have stains and other undesirable phenomena;

2、Products can not be deformed and other undesirable phenomena;

3、 All materials must meet ROHS standards。

THIRD ANGLE PROJECTION

TOLERANCES UNLESS OTHERWISE SPECIFIED

ONE PLACE DECIMAL	.X	±0.2
TWO PLACE DECIMAL	.XX	±0.15
THREE PLACE DECIMAL	.XXX	N/A
HOLE DIA. VARIATION	.XX	±0.05
ANGULAR DIMENSION	(ENG)	±1°

DRAWING APPROVAL

DWN:

CHK:

APPD:

SIZE: A4 UNIT: mm

Exceltek

Electronics Technology(DG) Co.,Ltd

PART No: ME2189 REV: 01

TITLE:

AP630 BT Antenna

SHEET: 1 OF 1 SCALE: 1:1

REV	DESCRIPTION	DATE
01	DRAWING RECEIVED	2018.12.04

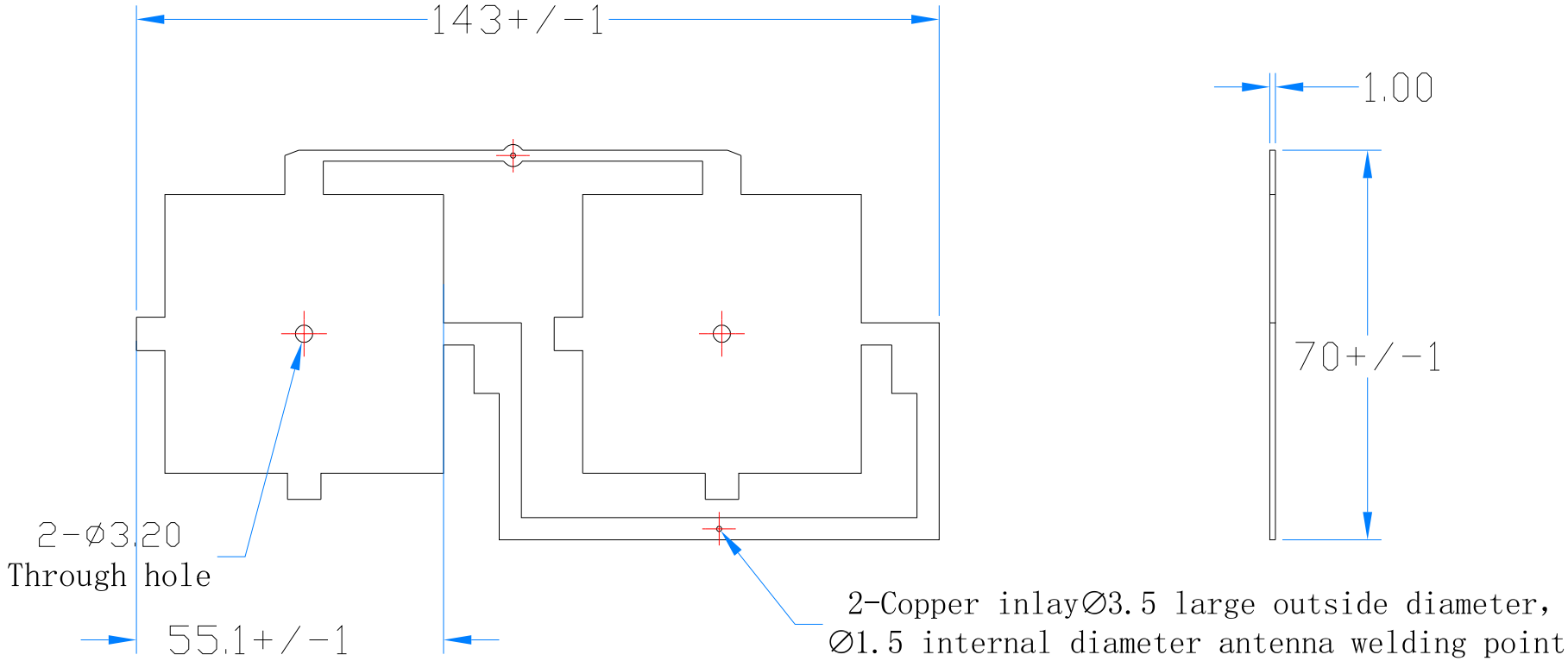

NOTES:
1.Material: 5052 aluminum;
2.Plating: natural color;
3. Do not deform. No burrs on the edges;
4.Separate the packages with cardboard;
5.All materials must meet ROHS standards;

THIRD ANGLE PROJECTION

TOLERANCES UNLESS OTHERWISE SPECIFIED

ONE PLACE DECIMAL	.X	±0.2
TWO PLACE DECIMAL	.XX	±0.1
THREE PLACE DECIMAL	.XXX	N/A
HOLE DIA. VARIATION	.XX	±0.05
ANGULAR DIMENSION	(ENG)	±1°

DRAWING APPROVAL
DWN:
CHK:
APPD:
SIZE: A4
UNIT: mm

Exceltek
Electronics Technology(DG) Co.,Ltd

PART No: MH0239
REV: 01
TITLE: 2.4G Antenna oscillator
SHEET: 1 OF 1
SCALE: 1:1

REV	DESCRIPTION	DATE
01	DRAWING RECEIVED	2018.12.04

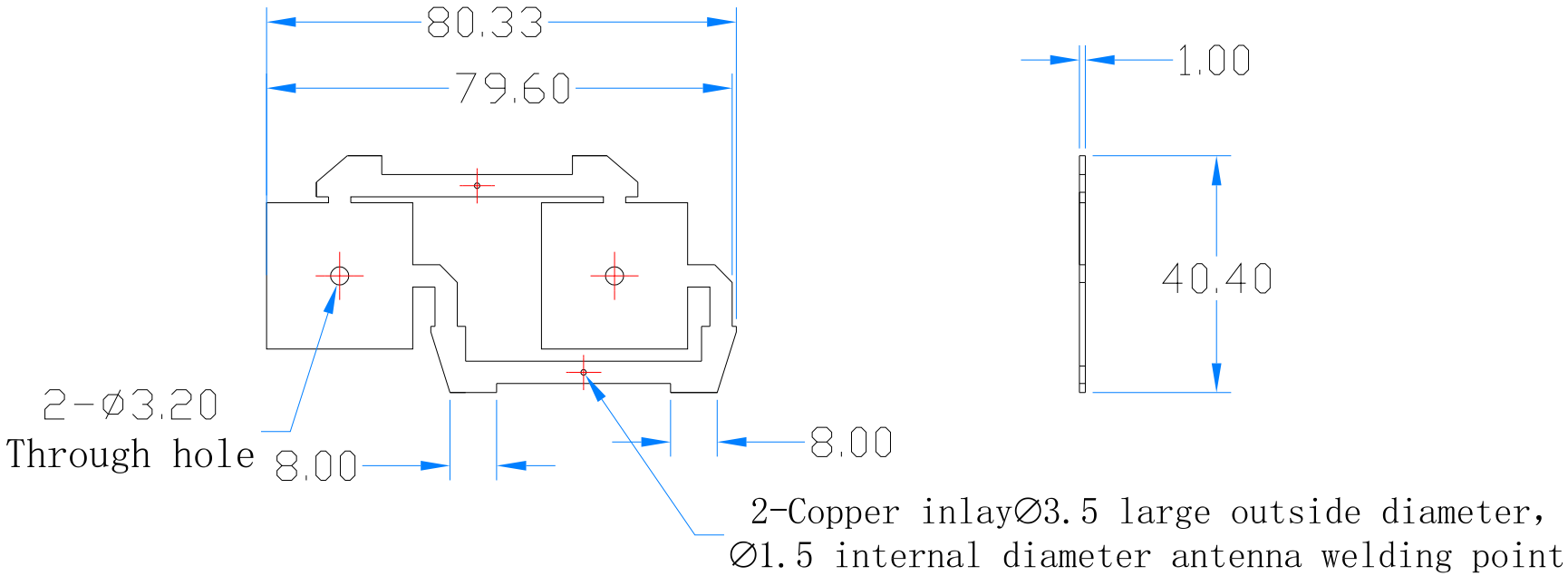

NOTES:
1.Material: 5052 aluminum;
2.Plating: natural color;
3. Do not deform. No burrs on the edges;
4.Separate the packages with cardboard;
5.All materials must meet ROHS standards;

THIRD ANGLE PROJECTION

TOLERANCES UNLESS OTHERWISE SPECIFIED

ONE PLACE DECIMAL	.X	±0.2
TWO PLACE DECIMAL	.XX	±0.1
THREE PLACE DECIMAL	.XXX	N/A
HOLE DIA. VARIATION	.XX	±0.05
ANGULAR DIMENSION	(ENG)	±1°

DRAWING APPROVAL
DWN:
CHK:
APPD:
SIZE: A4
UNIT: mm

Exceltek
Electronics Technology(DG) Co.,Ltd

PART No: MH0240
REV: 01
TITLE: 5G Antenna oscillator
SHEET: 1 OF 1
SCALE: 1:1

REV	DESCRIPTION	DATE	ECN	ENG
01	DRAWING RECEIVED	2019.07.05		TAN
02				
03				
04				

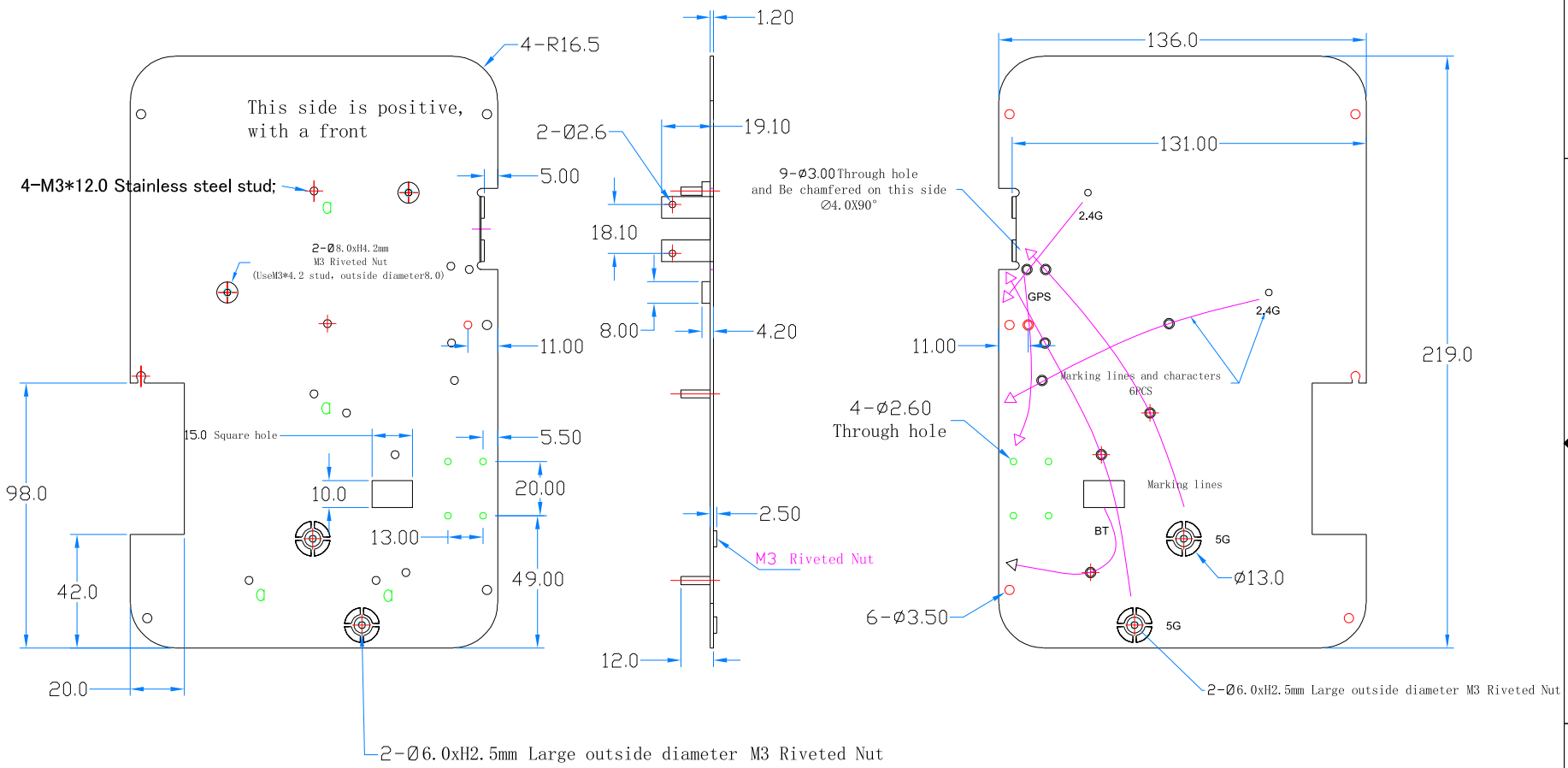

NOTES:

1、Material: Aluminum Plate Δ1.2X219X136, no more than 4 scratches and scratches on the surface, the length of scratches is not more than 15mm, the surface can not have stains and other undesirable phenomena; ;
2、Coating: natural color, double-sided paste protective film;
3、Separate the packages with cardboard;
4、C0.1 ~ 0.2 without chamfer, tolerance% p0.2 mm;
5、All materials must meet ROHS standards;
6、The reflector shall not be bent or distorted。

THIRD ANGLE PROJECTION

TOLERANCES UNLESS OTHERWISE SPECIFIED		
ONE PLACE DECIMAL	.X	±0.2
TWO PLACE DECIMAL	.XX	±0.1
THREE PLACE DECIMAL	.XXX	N/A
HOLE DIA. VARIATION	.XX	N/A
ANGULAR DIMENSION	(ENG)	±5°

DRAWING APPROVAL
DWN:
CHK:
APPD:
SIZE: A4
UNIT: mm

Exceltek
Electronics Technology(DG) Co.,Ltd

PART No. MH0251
REV: 01
ITEM: Antenna Reflection panel
SHEET: 1 OF 1
SCALE: 1:1