REMOTE CONTROL OPERATING INSTRUCTIONS

Install 2 x 1.5V AAA battery into the remote control. To prevent damage to the remote control, remove the battery if not used for long periods of time.

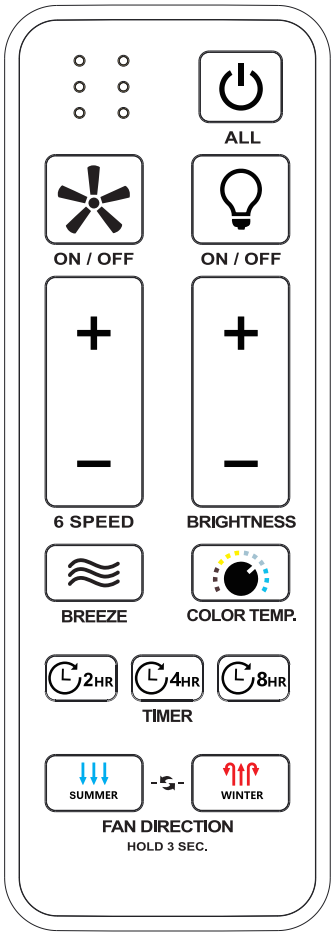

LEARNING/PAIRING PROCESS FOR MULTIPLE FAN INSTALLATION

Should you desire to install more than one fan in the home, please install one by one using the steps below to insure one remote operates each fan independently:

- ☐ Step 1: Turn off the main power source to all fans to begin the learning process on any single fan.
- ☐ Step 2: Restore power to only one fan at a time for pairing, the rest remain off by use of your wall mounted power switch.
- ☐ Step 3: Within 30 seconds of turning the fan's AC power ON, press and hold the LEARNING KEY for 5 seconds to enter the learningfunction. Once the receiver has detected the set frequency, a beeping sound is emitted when pairing is complete.
- ☐ Step 4: Repeat steps 1, 2 and 3 with each individual fan to insure one remote does not operate multiple fans.

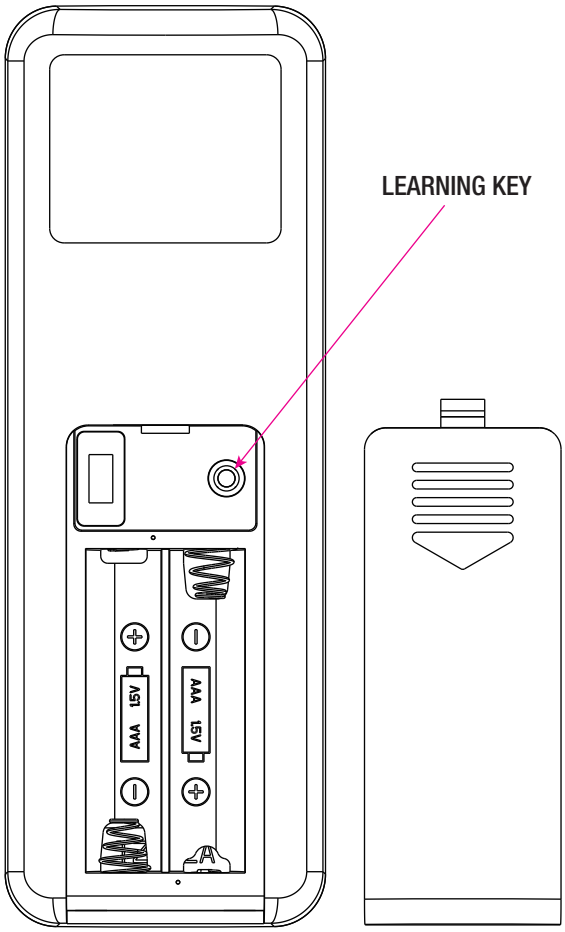

1. Fan button. - Press and release the button to turn the fan and light off.

2. Speed functions

button, turn the fan on or off.

+ button, increases the fan speed

- Pressing and releasing the + button one time will increase the speed of the fan.
- Pressing the + button while in Comfore breeze mode, will automatically cancel the Comfort breeze mode and resume normal fan operation.

- button, increases the fan speed

- Pressing and releasing the - button one time will increase the speed of the fan.
- Pressing the - button while in Comfore breeze mode, will automatically cancel the Comfort breeze mode and resume normal fan operation.

Comfort breeze

There are three Comfort breeze settings. Pressing the button will activate the Comfort breeze mode.

- Warm weather: SUMMER LED bar will illuminate and the lights will flow from high to low.
  (Counterclockwise Direction) A downward air flow creates a cooling effect. This allows you to set your air conditioner on a higher setting without affecting your comfort.

- Cool weather: WINTER LED bar will illuminate and the lights will flow from low to high.
  (Clockwise Direction) An upward air flow moves warm air off the ceiling. This allows you to set your heating unit on a lower setting without affecting your comfort.

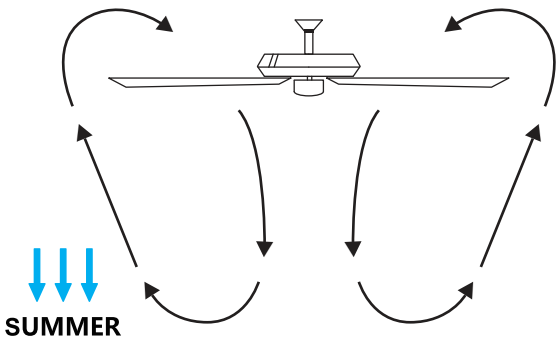

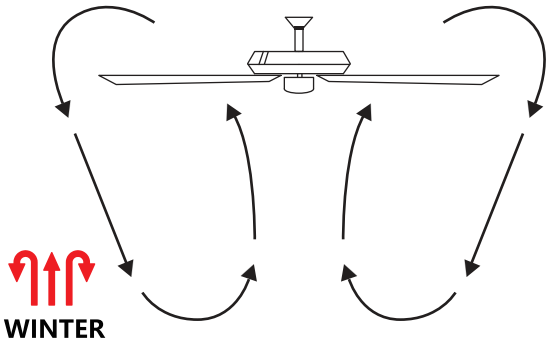

3. Light functions

- ☐ Press and release button one time will turn the light on or off.
- ☐ Press and release button to select the desired color temperature.
- ☐ Press + to increase the desired light level.
- ☐ Press − to decrease the desired light level.

4. Timer 2HR 4HR 8HR

- ☐ Pressing the timer button will automatically turn fan and light (if light is on) off after 2, 4 or 8 hours.

User Manual (Note/Warning/Caution)

Warning: Changes or modifications to this unit not expressly approved by the party responsible for compliance could void the user's authority to operate the equipment.

This device complies with Part 15 of the FCC Rules. Operation is subject to the following two conditions: (1) this device may not cause harmful interference, and (2) this device must accept any interference received, including interference that may cause undesired operation.

Note: This equipment has been tested and found to comply with the limits for a Class B digital device, pursuant to part 15 of the FCC Rules. These limits are designed to provide reasonable protection against harmful interference in a residential installation. This equipment generates, uses and can radiate radio frequency energy and, if not installed and used in accordance with the instructions, may cause harmful interference to radio communications. However, there is no guarantee that interference will not occur in a particular installation. If this equipment does cause harmful interference to radio or television reception, which can be determined by turning the equipment off and on, the user is encouraged to try to correct the interference by one or more of the following measures:
-- Reorient or relocate the receiving antenna.
-- Increase the separation between the equipment and receiver.
-- Connect the equipment into an outlet on a circuit different from that to which the receiver is connected.
-- Consult the dealer or an experienced radio/TV technician for help.

This device contains license-exempt transmitter(s)/receiver(s) that comply with Innovation, Science and Economic Development Canada's license-exempt RSS(s). Operation is subject to the following two conditions:
1. This device may not cause interference.
2. This device must accept any interference, including interference that may cause undesired operation of the device.

Cet appareil contient un ou des émetteurs/récepteurs exempts de licence qui sont conformes au(x) RSS exempts de licence d'Innovation, Science et Développement économique Canada. Le fonctionnement est soumis aux deux conditions suivantes :
1. Cet appareil ne doit pas causer d'interférences.
2. Cet appareil doit accepter toute interférence, y compris les interférences qui peuvent causer un fonctionnement non désiré de l'appareil.