PERFORMANCE TREADMILL

SF-T7917

USER MANUAL

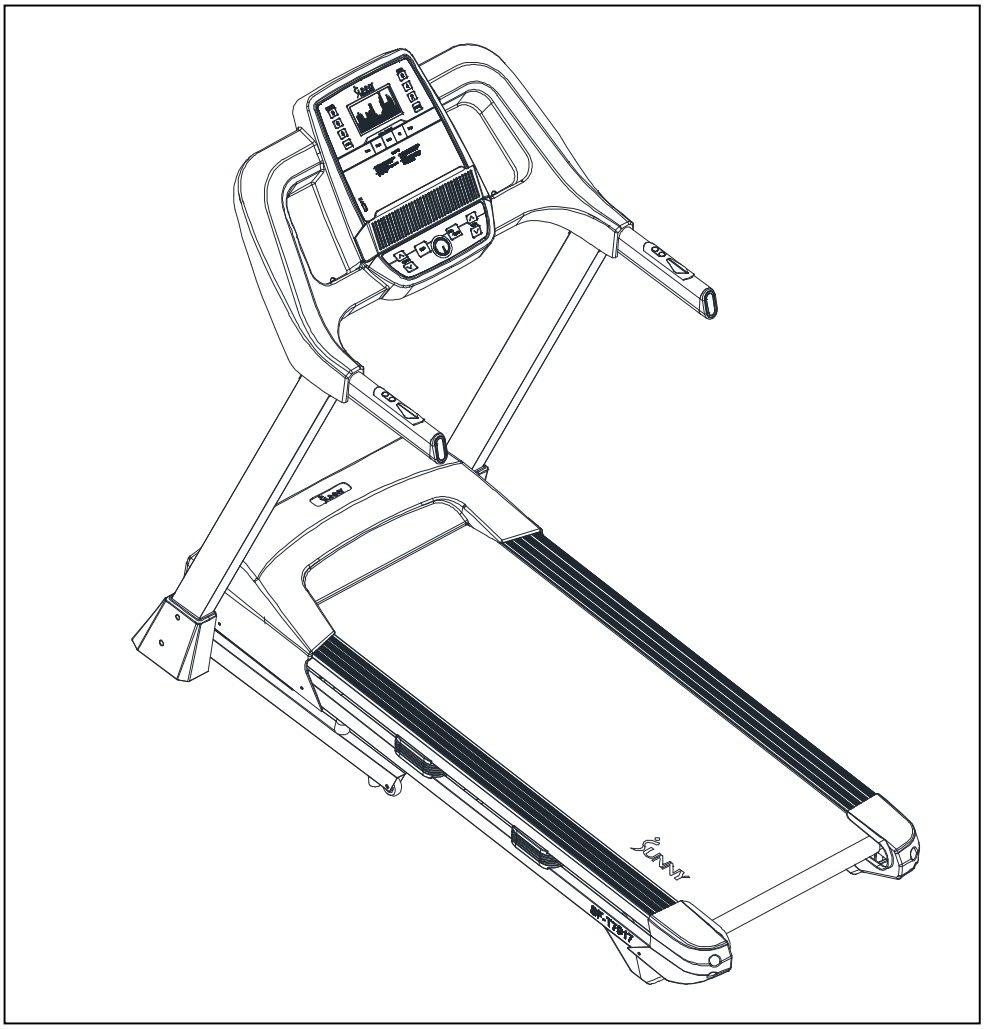

IMPORTANT! Please retain owner's manual for maintenance and adjustment instructions. Your satisfaction is very important to us, **PLEASE DO NOT RETURN UNTIL YOU HAVE CONTACTED US**: support@sunnyhealthfitness.com or 1- 877 - 90SUNNY (877-907-8669).

WWW.SUNNYHEALTHFITNESS.COM

IMPORTANT SAFETY INSTRUCTION

When using an electrical appliance, basic precautions should always be followed, including the following:

Read all instructions before using this treadmill.

DANGER– To reduce the risk of electrical shock:

1. Always unplug this appliance from the electrical outlet immediately after using and before cleaning.

WARNING – To reduce the risk of burns, fire, electric shock, or injury to persons:

1. The treadmill should never be left unattended when plugged in. Unplug the treadmill from outlet when not in use and before putting on or taking off parts.
2. Use this treadmill only for its intended use as described in this manual. Do not use attachments not recommended by the manufacturer.
3. Never operate this treadmill if it has a damaged cord or plug, if it is not working properly, if it has been dropped or damaged, or dropped into water. Return this treadmill to a service center for examination and repair.
4. Keep the cord away from heated surfaces.
5. Never operate the treadmill with the air openings blocked. Keep the air openings free of lint, hair, and alike items.
6. Never drop or insert any object into any opening.
7. Do not use outdoors.
8. Do not operate where aerosol (spray) products are being used or where oxygen is being administered.
9. To disconnect, turn the treadmill off, then remove the plug from the outlet.
10. Connect this treadmill to a properly grounded outlet only. See grounding instructions.
11. This treadmill is not intended for use by persons with reduced physical, sensory or mental capabilities, or lack of experience and knowledge, unless they have been given supervision or instruction concerning use of the appliance by a person responsible for their safety. Keep children under the age of 13 away from this treadmill.

CAUTION:

To avoid injury, use extreme caution when stepping onto or off of a moving belt. Read instruction manual before using.

SAVE THESE INSTRUCTIONS

IMPORTANT SAFETY INFORMATION

We thank you for choosing our product. To ensure your safety and health, please use this equipment correctly. It is important to read this entire manual before assembling and using the equipment. Safe and effective use can only be achieved if the equipment is assembled, maintained, and used properly. It is your responsibility to ensure that all users of the equipment are informed of all warnings and precautions.

1. Before starting any exercise program, you should consult your physician to determine if you have any medical or physical conditions that could put your health and safety at risk or prevent you from using the equipment properly. Your physician's advice is essential if you are taking medication that affects your heart rate, blood pressure, or cholesterol level.
2. Be aware of your body's signals. Incorrect or excessive exercise can damage your health. Stop exercising if you experience any of the following symptoms: pain, tightness in your chest, irregular heartbeat, shortness of breath, lightheadedness, dizziness, or feelings of nausea. If you do experience any of these conditions, you should consult your physician before continuing with your exercise program.
3. Keep children and pets away from the equipment. The equipment is designed for adult use only.
4. Use the equipment on a solid, flat level surface with a protective cover for your floor or carpet. To ensure safety, the equipment should have at least 8 feet (240CM) of free space behind it and 2 feet (60CM) on each side. Do not place the treadmill on any surface that blocks air openings. To protect the floor or carpet from damage, place a mat under the treadmill.
5. Ensure that all nuts and bolts are securely tightened before using the equipment. The safety of the equipment can only be maintained if it is regularly examined for damage and/or wear and tear.
6. Always use the equipment as indicated. If you find any defective components while assembling or checking the equipment, or if you hear any unusual noises coming from the equipment during exercise, discontinue use of the equipment immediately and do not use until the problem has been rectified.
7. Wear suitable clothing while using the equipment. Avoid wearing loose clothing that may become entangled in the equipment.
8. Do not place fingers or objects into the moving parts of the equipment.
9. The maximum weight capacity of this unit is 265 pounds (120 KG).
10. The equipment is not suitable for therapeutic use.
11. To avoid bodily injury and/or damage to the product or property, proper lifting and moving are required.
12. Your product is intended for use in cool and dry conditions. You should avoid storage in extreme cold, hot or damp areas as this may lead to corrosion and other related problems.
13. This equipment is designed for indoor and home use only; it is not intended for commercial use!

IMPORTANT OPERATING INSTRUCTION

1. Insert the power plug directly into the socket.
2. Read the manual before operating the treadmill.
3. Changes in speed do not occur immediately. Set your desired speed using the adjustment keys on the main console. The speed will increase gradually.
4. While on the treadmill, move with caution as distractions may cause you to lose balance and stray from walking in the center of the running belt which may result in serious injury.
5. This treadmill starts at a very low speed. To begin use, hold onto the handrails and stand on the side rails while it starts up, then step onto the running belt once it's in motion.
6. Always hold the handrail when making changing settings.
7. A safety key is provided for emergency use. The treadmill will function only if the safety key is inserted into the computer console. In case of emergency, remove the safety key to immediately stop the running belt and shut off the treadmill. The display screen will reset once the safety key is reinserted.
8. The console control keys are precisely set and require very little finger pressure to use. To avoid damaging these keys, do not use excessive pressure when operating these controls.
9. This equipment is designed for adult use only! Children should not be allowed to use or play near this equipment. When present, children should be supervised at all times by an adult.
10. Women who are pregnant or nursing should consult a physician before attempting to begin any exercise program.
11. Always stay hydrated during and after exercise.

IMPORTANT NOTE:
This treadmill does come pre-lubricated, but it is recommended to lubricate your treadmill before the first use. **Please see *Page 10* for instructions on how to properly apply lubricant.**

EXPLODED DIAGRAM

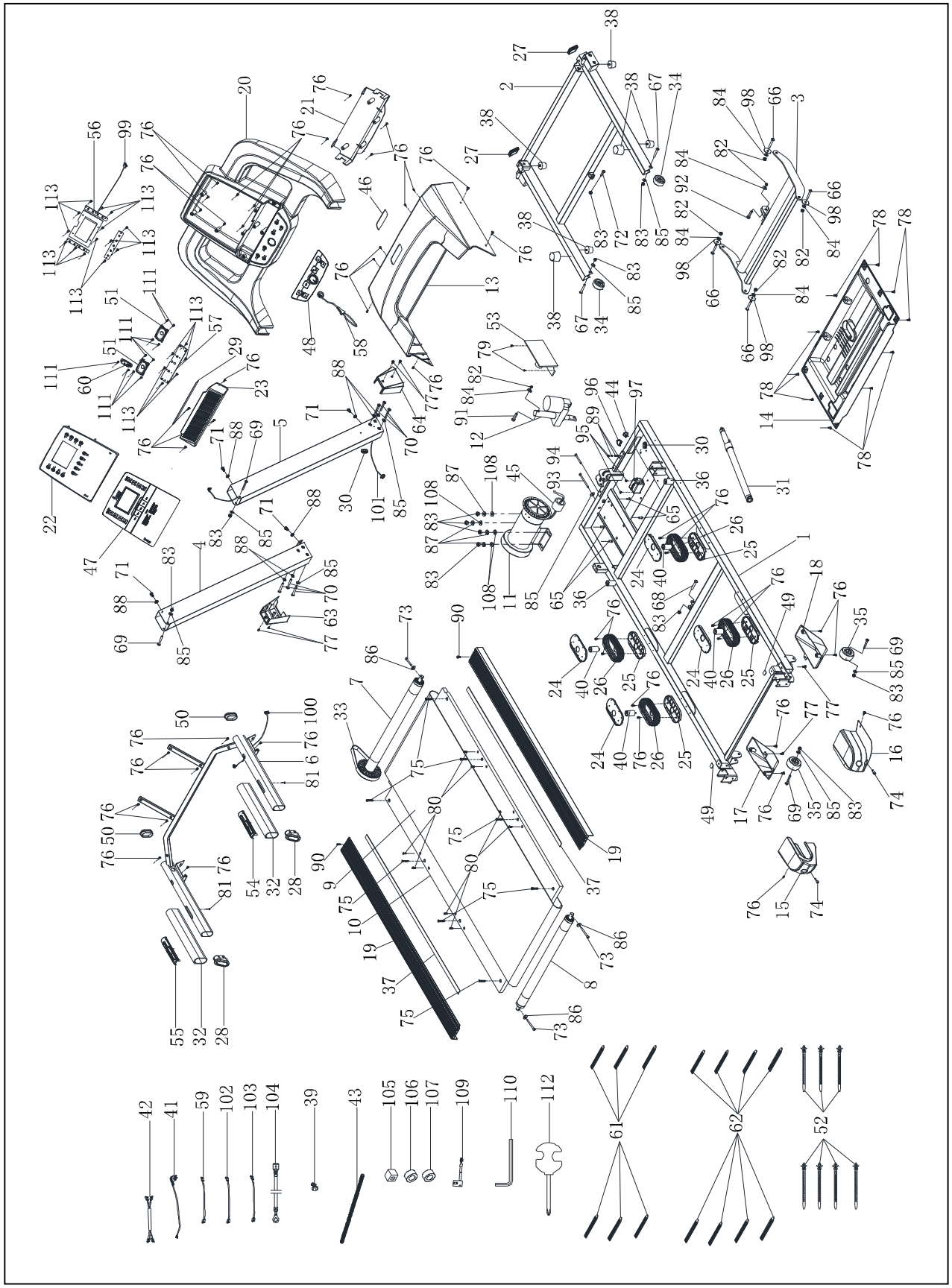

PARTS LIST

No.	Description	Specification	Qty.
1	Main Frame		1
2	Base Frame		1
3	Incline Frame		1
4	Left Upright Tube		1
5	Right Upright Tube		1
6	Computer Bracket		1
7	Front Roller		1
8	Rear Roller		1
9	Running Belt	T1.6*480*2700	1
10	Running Board	T18*650*1218	1
11	DC Motor	1.25HP:5400RPM	1
12	Incline Motor	HP: 1/20	1
13	Motor Top Cover	675*450*175.5	1
14	Motor Bottom Cover	675*362.2*80	1
15	Left Rear End Cap	222.4*129*107.7	1
16	Right Rear End Cap	222.4*129*107.7	1
17	Left Rear End Cap Cover	201.6*88.8*65	1
18	Right Rear End Cap Cover	201.6*88.8*65	1
19	Side Rail	1150*87.9*35	2
20	Screen Upper Cover	830.6*599.3*169.9	1
21	Screen Bottom Cover	404.8*134*60.6	1
22	Screen Panel	293.6*273.9*37.8	1
23	Speaker Cover	355.3*96.6*48.8	1
24	Bumper Upper Cover	139*64*16	4
25	Bumper Bottom Cover	139*64*10	4
26	Bumper Sheath	141.4*66.4*36	4
27	Rectangle End Cap	50*33.6*25	2
28	Oval End Cap	66*44*36	2
29	Anti-slip Rubber	260*17*t1.0	1
30	Annular Wire-protect Cap	Φ12*Φ18*Φ24*9	2
31	Air Pressure Cylinder	Φ8*Φ12*Φ22*715 30KG	1
32	Side Handle Foam Grip	Φ54*Φ48*Φ280	2
33	Belt	190-J-7	1
34	Transportation Wheel	Φ8.2*Φ51.5*20	2
35	Transportation Wheel	Φ8.2*Φ62*33.5	2
36	Deck Bumper	M6*t38*Φ23	2
37	Double-sided Adhesive Tape	1150*35*t2.0	2
38	Deck Bumper	M6*10*Φ26*Φ32*t23	6
39	Power Wire Clip	7P-2	1
40	Deck Bumper	M6*t38*Φ23	4
41	Power Cord	14AWG	1
42	Double Branch Wire	800MM	1

No.	Description	Specification	Qty.
43	Pipe	Φ7*Φ10.5*350	1
44	Switch	16A	1
45	Reed Switch	Φ30*Φ20*t10	1
46	Model Decal	100*38*1.0	1
47	Screen Ornament Decal		1
48	Keyboard Ornament Decal		1
49	Adhesive Tape	23*32*t1.0	2
50	Oval End Cap	30*60*15	2
51	Speaker	3W	2
52	Zip Tie	4.8*200mm	7
53	Control Board		1
54	Hand Pulse with Speed	30*60*15	1
55	Hand Pulse with Incline	30*60*15	1
56	Computer Module		1
57	Keyboard		1
58	Safety Key		1
59	Single Branch Wire	100mm	1
60	USB Module		1
61	Zip Tie	ST-100mm	6
62	Zip Tie	ST-200mm	8
63	Left Post Cover		1
64	Right Post Cover		1
65	Carriage Bolt	M8*20	4
66	Bolt	M10*25	4
67	Bolt	M8*35	2
68	Bolt	M8*45	1
69	Bolt	M8*50	4
70	Bolt	M8*65	6
71	Bolt	M8*15	4
72	Bolt	M8*25	1
73	Bolt	M6*50	3
74	Bolt	M6*12	2
75	Screw	M6*25	8
76	Screw	ST4.2*15	45
77	Screw	ST4.2*10	6
78	Screw	M4*15	10
79	Screw	M4*15	2
80	Screw	M4*25	8
81	Screw	M4*55	2
82	Locknut	M10	6
83	Locknut	M8	12
84	Washer	Φ10.5*Φ20*t2.0	6

No.	Description	Specification	Qty
85	Washer	Φ8.4*Φ16*t1.6	9
86	Washer	Φ6.4*Φ12*t1.6	3
87	Spring Washer	Φ8.1*Φ12.3*t2.1	4
88	Internal Tooth Lock Washer	Φ8.4*Φ15*t0.8	8
89	Internal Tooth Lock Washer	Φ4.3*Φ8*t0.5	3
90	Screw	M4*25	2
91	Bolt	M10*50	1
92	Bolt	M10*25	1
93	Bolt	M8*110	1
94	Bolt	M8*100	1
95	Screw	M4*8	3
96	Overload Protector	10A	1
97	Filter	15A	1
98	Plastic Washer	4.8*200mm,Black	4
99	Communication Upper Wire	450mm	1

No.	Description	Specification	Qty
100	Communication Middle Wire	450mm	1
101	Communication Lower Wire	1700mm	1
102	Single Branch Wire	300mm Brown	1
103	Single Branch Wire	300mm Blue	1
104	Ground Lead Wire	600mm	1
105	Magnetic Snap	31*30*27	1
106	Reed Switch	Φ31*Φ20*t15 Green	1
107	Reed Switch	Φ35*Φ25*T14 Black	1
108	Washer	Φ8.4*Φ24*t2.0	4
109	Optical Sensor		1
110	Allen Wrench	100*50*S5	1
111	Screw	ST3.0*8	10
112	Spanner	13*16	1
113	Screw	ST2.5*8	20

HARDWARE PACKAGE

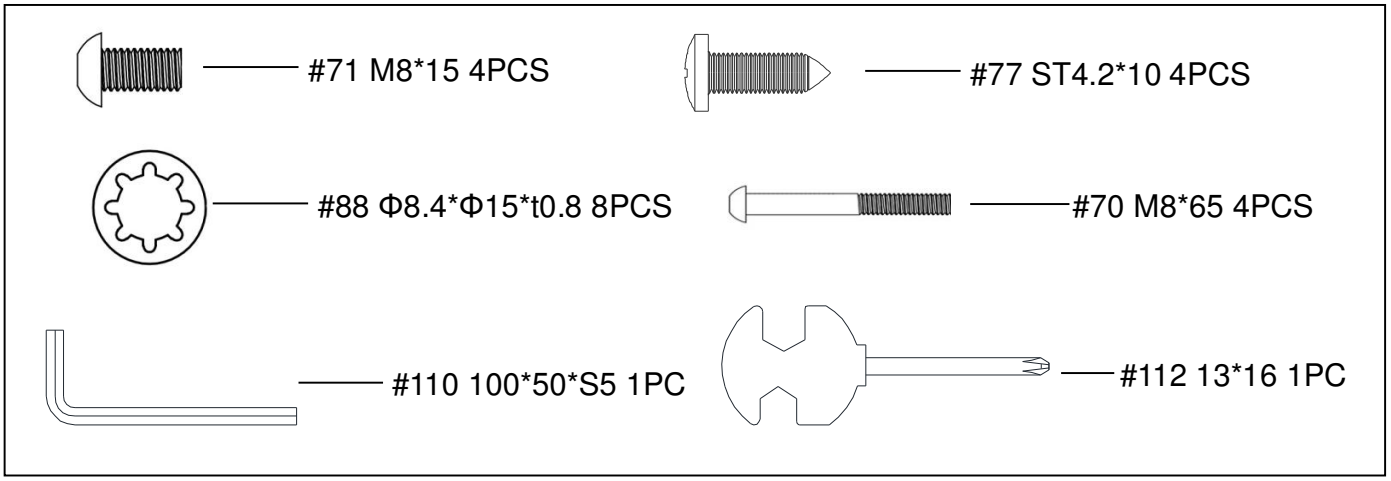

Ordering Replacement Parts (U.S. and Canadian Customers only)

Please provide the following information in order for us to accurately identify the part(s) needed:

- ✓ The model number (found on cover of manual)
- ✓ The product name (found on cover of manual)
- ✓ The part number found on the “EXPLODED DIAGRAM” and “PARTS LIST” (found near the front of the manual)

Please contact us at support@sunnyhealthfitness.com or 1- 877 - 90SUNNY (877-907-8669).

ASSEMBLY INSTRUCTIONS

We value your experience using Sunny Health and Fitness products. For assistance with parts or troubleshooting, please contact us at support@sunnyhealthfitness.com or 1-877-90SUNNY (877-907-8669).

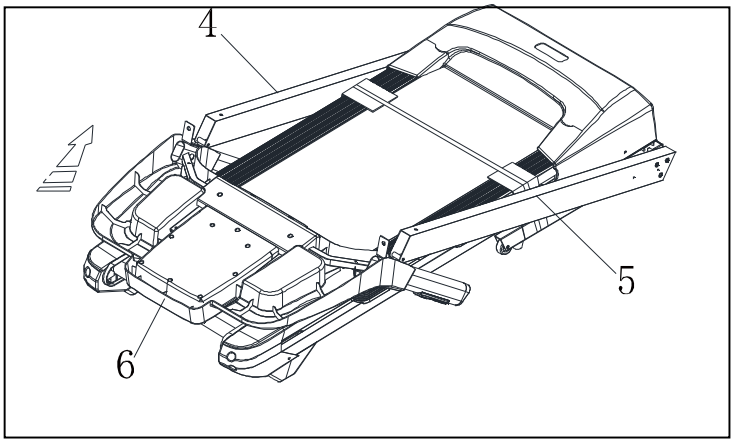

STEP 1:

Remove the equipment from the carton and place it on the flat ground. As indicated by the arrow, lift the **Left & Right Upright Tubes (No. 4 & No. 5)** and **Computer Bracket (No. 6)**.

NOTE: Be careful not to puncture the wires when unfolding! Do not cut the packing belt until the assembly is complete!

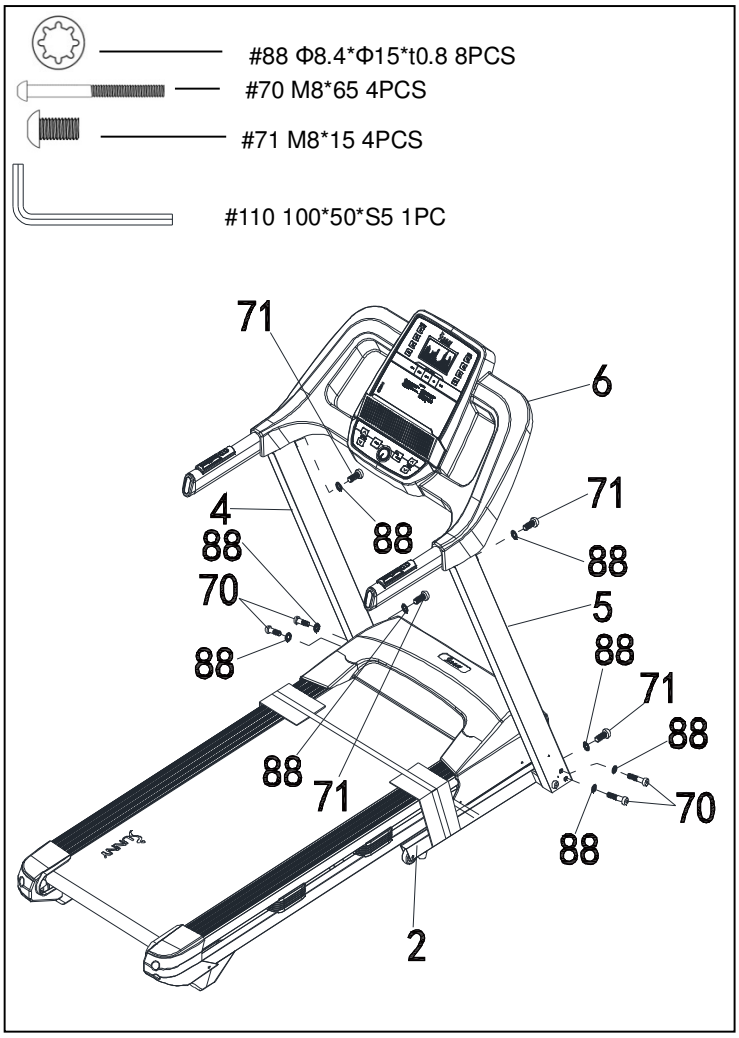

STEP 2:

Attach **Left & Right Upright Tubes (No. 4 & No. 5)** to the **Base Frame (No. 2)** with 6 **Internal Tooth Lock Washers (No. 88)**, 4 **Bolts (No. 70)**, and 2 **Bolts (No. 71)**. Tighten and secure with **Allen Wrench (No. 110)**.

Attach the **Computer Bracket (No. 6)** to the **Left & Right Upright Tubes (No. 4 & No. 5)** with 2 **Internal Tooth Lock Washers (No. 88)** and 2 **Bolts (No. 71)**. Tighten and secure with **Allen Wrench (No. 110)**.

We value your experience using Sunny Health and Fitness products. For assistance with parts or troubleshooting, please contact us at support@sunnyhealthfitness.com or 1-877-90SUNNY (877-907-8669).

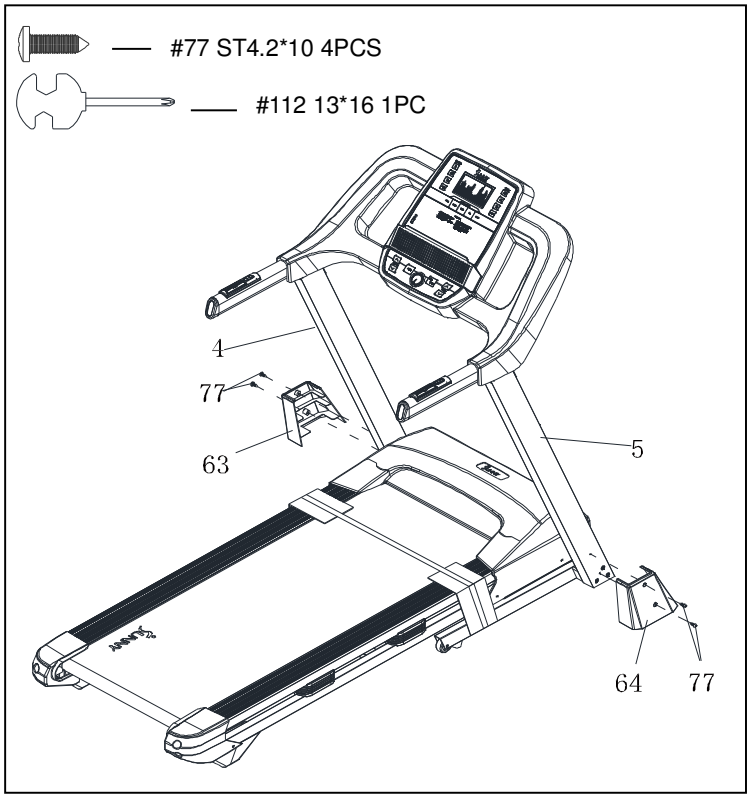

STEP 3:

Attach the **Left & Right Post Covers (No. 63 & No. 64)** to the **Left & Right Upright Tubes (No. 4 & No. 5)** with 4 **Screws (No. 77)**. Tighten and secure with **Spanner (No. 112)**.

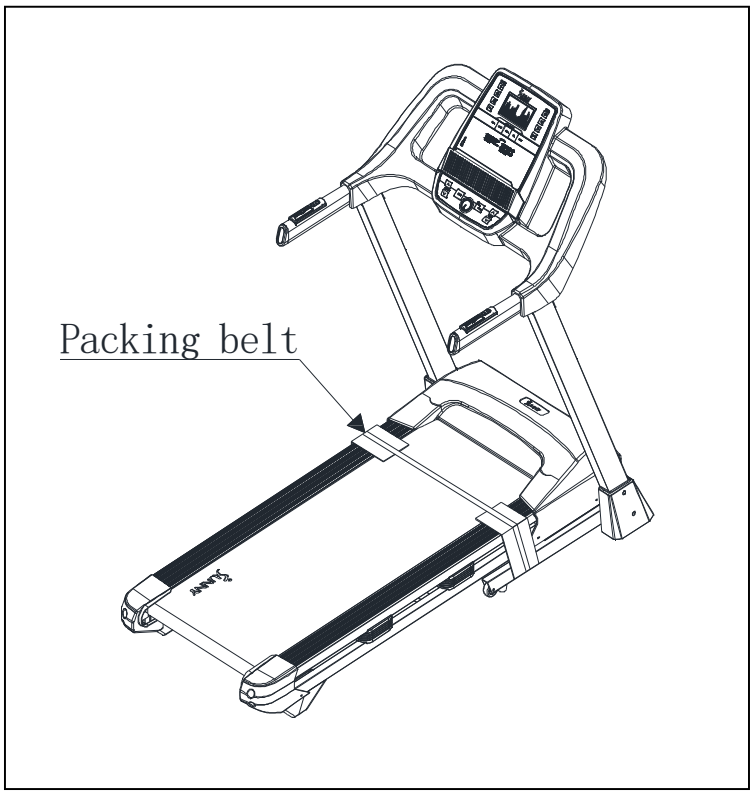

STEP 4:

You may now remove the packing belt.

⚠IMPORTANT NOTE!

This treadmill does come pre-lubricated, but it is recommended to lubricate your treadmill before the first use. See *Page 10*.

The assembly is complete!

MAINTENANCE & CARE

General cleaning will help to prolong the life and improve the performance of your treadmill. Keep the treadmill clean and maintained by dusting the components on a regular basis. Cleaning the two exposed sides of the **Running Belt (No. 9)** will prevent dust from accumulating underneath. Keep your running shoes clean so that dirt from the shoes does not wear the **Running Board (No. 10)** and **Running Belt (No. 9)**. Clean the surface of the **Running Belt (No. 9)** using a clean damp cloth. Keep liquids away from electrical parts and **Running Belt (No. 9).**

To better maintain the treadmill and prolong its life it is suggested that the treadmill be powered off for 10 minutes every 2 hours and fully powered off whenever not in use.

CENTERING THE RUNNING BELT:
Place the treadmill on level ground and set it at 2.1 MPH to check if the **Running Belt (No. 9)** drifts from the center. Adjust the **Running Belt (No. 9)** according to instructions below with **Allen Wrench (No. 110)**.

If the **Running Belt (No. 9)** moves to the right, turn the right adjusting bolt ¼ turn *clockwise*, then turn the left adjusting bolt ¼ turn *counter-clockwise*. If the **Running Belt (No. 9)** does not move, repeat this step until it centers. Refer to Figure A.

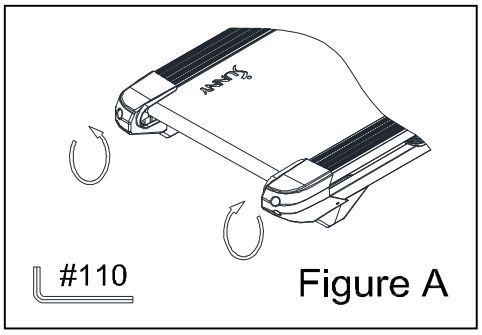

Figure A

If the **Running Belt (No. 9)** moves to the left, turn the left adjusting bolt ¼ turn *clockwise*, then turn the right adjusting bolt ¼ turn *counter-clockwise*. If the **Running Belt (No. 9)** does not move, repeat this step until it centers. Refer to Figure B.

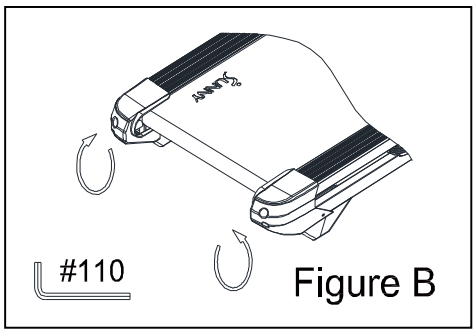

Figure B

Over time the **Running Belt (No. 9)** will loosen. To tighten the **Running Belt (No. 9)**, turn the left & right adjusting bolts one full turn *clockwise*, check the tension of the **Running Belt (No. 9)**. Continue this process until **Running Belt (No. 9)** is at the correct tension. Make sure to adjust both sides equally to ensure correct belt alignment. Refer to Figure C.

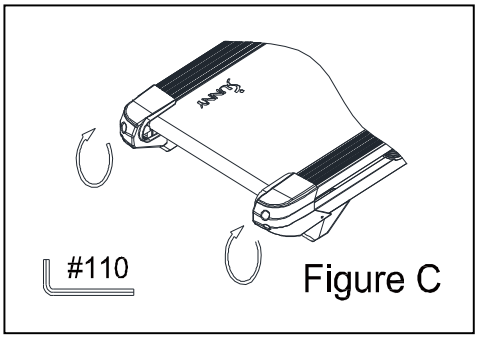

Figure C

LUBRICATING THE TREADMILL

IMPORTANT NOTE:
This treadmill does come pre-lubricated, but it is recommended to lubricate your treadmill before the first use.

RUNNING BELT & TREADMILL LUBRICANT:
Lubricating the **Running Board (No. 10)** and **Running Belt (No. 9)** is essential as the friction affects the life span and operations of the treadmill. Inspect the **Running Board (No. 10)** regularly. If you find any wear on the **Running Board (No. 10)**, please contact us at: support@sunnyhealthfitness.com.

WARNING: Always unplug the treadmill from the electrical outlet before cleaning, lubricating, or repairing the unit.

HOW TO LUBRICATE:

1. Raise the **Running Belt (No. 9)** up on one side and apply lubricant to the **Running Board (No. 10)**. Use a rag to thoroughly wipe the lubricant over the **Running Board (No. 10)**. Repeat this process for the other side.
2. The moving parts should turn freely and quietly. Abnormal moving parts will affect the safety of the treadmill. Inspect and tighten bolts regularly.
3. To better maintain the treadmill and prolong its lifespan, it is suggested that maintenance be done on a regular basis.
4. DO NOT LOOSEN OR MAKE ANY ADJUSTMENTS TO THE RUNNING BELT WHILE APPLYING LUBRICANT. A loose **Running Belt (No. 9)** will result in the runner sliding off during use, while too tight of a **Running Belt (No. 9)** will negatively affect the motor's performance and also create more friction between the roller and **Running Belt (No. 9)**. The most suitable tightness for the **Running Belt (No. 9)** is pulled out **50-75mm** from the **Running Board (No. 10)**.

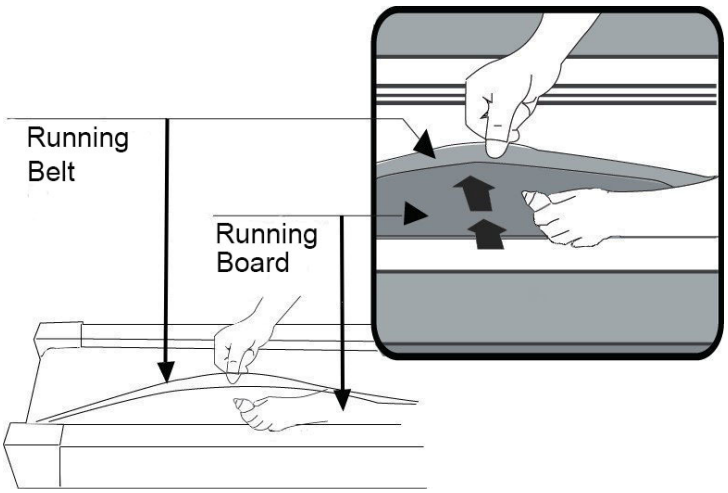

The following time table is recommended:

Light user (less than 3 hours/ week)	*every six months*
Medium user (3-5 hours/ week)	*every three months*
Heavy user (more than 5 hours/ week)	*every two months*

FOLDING INSTRUCTIONS

FOLDING:

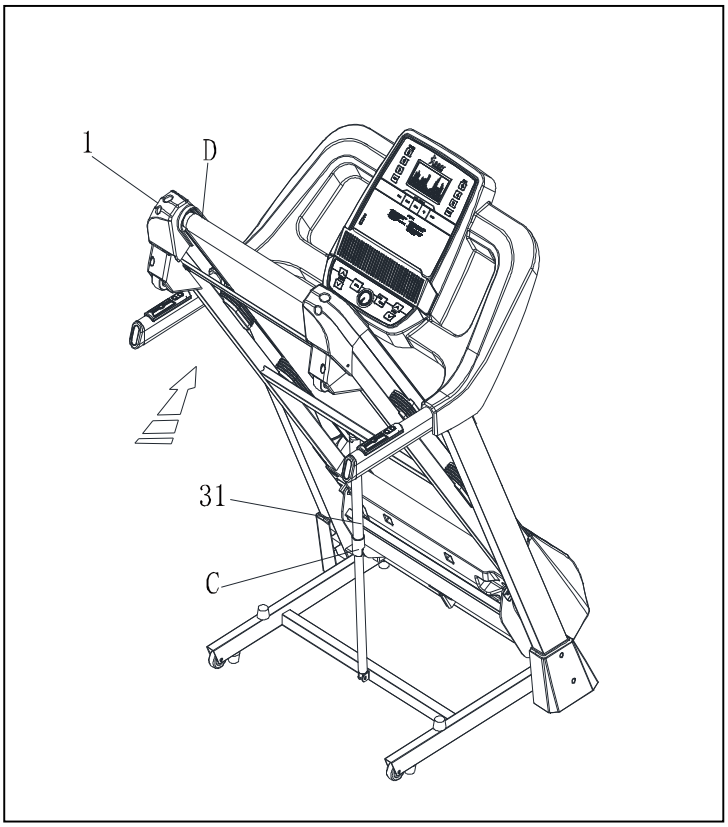

Before folding the treadmill, ensure that the incline is zero.

Place your hand at position "**D**" and lift the **Main Frame (No. 1)** up until the **Air Pressure Cylinder (No. 31)** "**C**" locks into the tube.

When the **Air Pressure Cylinder (No. 31)** successfully locks into the tube, you will hear a clicking sound.

UNFOLDING:

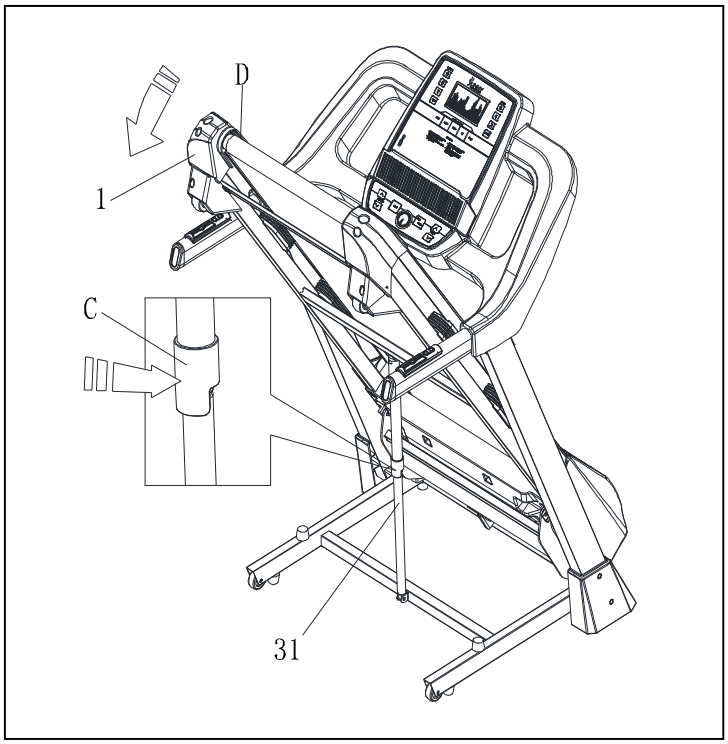

Before lowering the **Main Frame (No. 1)**, ensure that the space directly underneath is clear of any objects.

Grasp the **Main Frame (No. 1)** at position "**D**" with both hands. Next, using your foot, lightly kick the **Air Pressure Cylinder (No. 31)** "**C**" and press down on the **Main Frame (No. 1)**. Once the **Main Frame (No. 1)** has been pushed down, it will automatically continue to steadily lower itself until it reaches the ground.

HOW TO MOVE THE TREADMILL

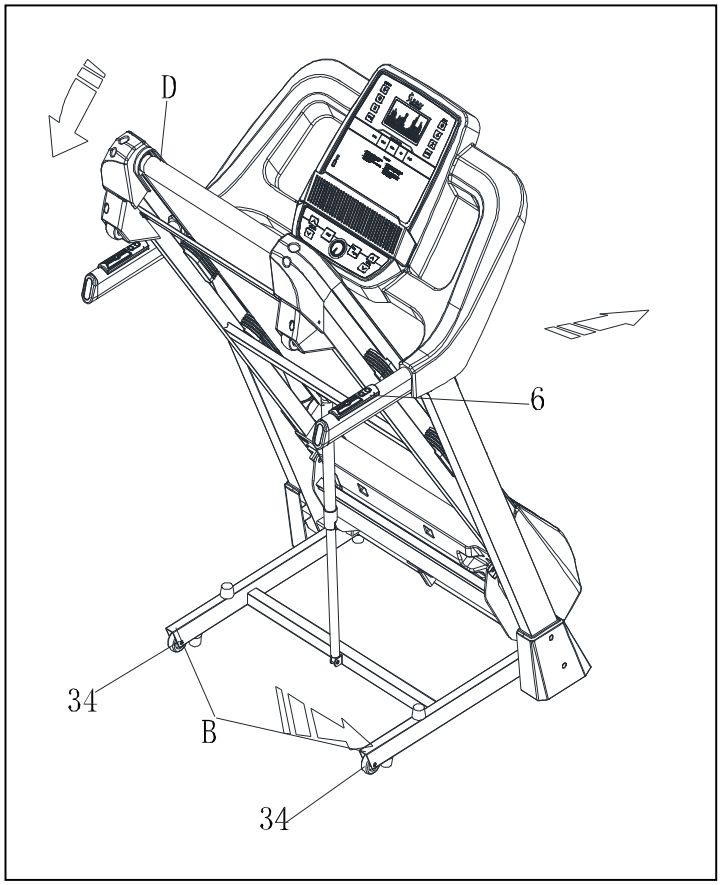

Before attempting to move the treadmill, please make sure that it has been properly folded. Then unplug the power cord.

To tilt, start by placing your hands at the handlebars of **Computer Bracket (No. 6)** to support the top end of the treadmill. Next, place one foot at position “B” to hold the bottom end of the treadmill steady. With your foot at position “B”, slowly tilt the top of the treadmill downward towards the ground. Once the handlebars of **Computer Bracket (No. 6)** reach a low enough point, the **Transportation Wheels (No. 34)** will touch the ground.

To transport, hold the treadmill from position “D” and tilt until the **Transportation Wheels (No. 34)** are able to move on the ground.

GROUNDING INSTRUCTIONS

WARNING: This treadmill requires a power source of **10 amps (100-120V)** in order to properly operate. For your safety, as well as the safety of others, please verify that the power source is correct before powering the treadmill. Any power supply source above or below this level could cause significant damage to the treadmill and/or user.

GROUNDING METHODS:
This treadmill must be grounded. Should the treadmill malfunction or breakdown, grounding provides a path of the least resistance for electrical current to reduce the risk of electric shock. This product is equipped with a plug that has an equipment-grounding conductor and a grounding plug. The plug must be plugged into an appropriate outlet that is properly installed and grounded in accordance with all local codes and ordinances.

GROUNDING METHOD

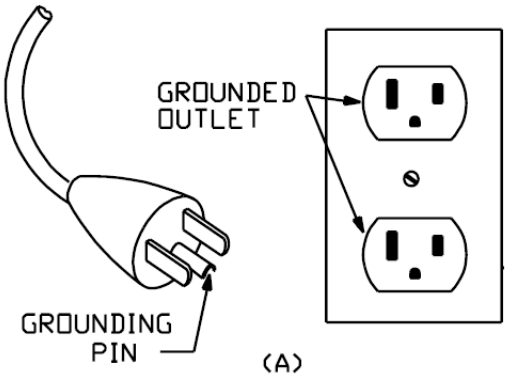

CAUTION:

Improper connection of the treadmill can result in risk of electric shock. Check with a qualified electrician or serviceman if you are unsure whether the treadmill has been properly grounded. Do not modify the plug provided with the treadmill. If it will not fit the outlet, have a proper outlet installed by a qualified electrician. Ensure that the treadmill is connected to an outlet which contains the same configuration as the plug. Do not use an adaptor for this treadmill.

WARNING!

1. **NEVER** use a ground fault circuit interrupt (GFCI) outlet with this treadmill. Route the power cord away from all moving parts of the treadmill, including the air pressure cylinder and transportation wheels.
2. **NEVER** operate the treadmill using a generator or UPS power supply.
3. **NEVER** remove any cover on this treadmill without first disconnecting the power cord.
4. **NEVER** expose the treadmill to rain or moisture. This treadmill is not designed for outdoor use or use in any high humidity environment.

THE DISPLAY CONSOLE

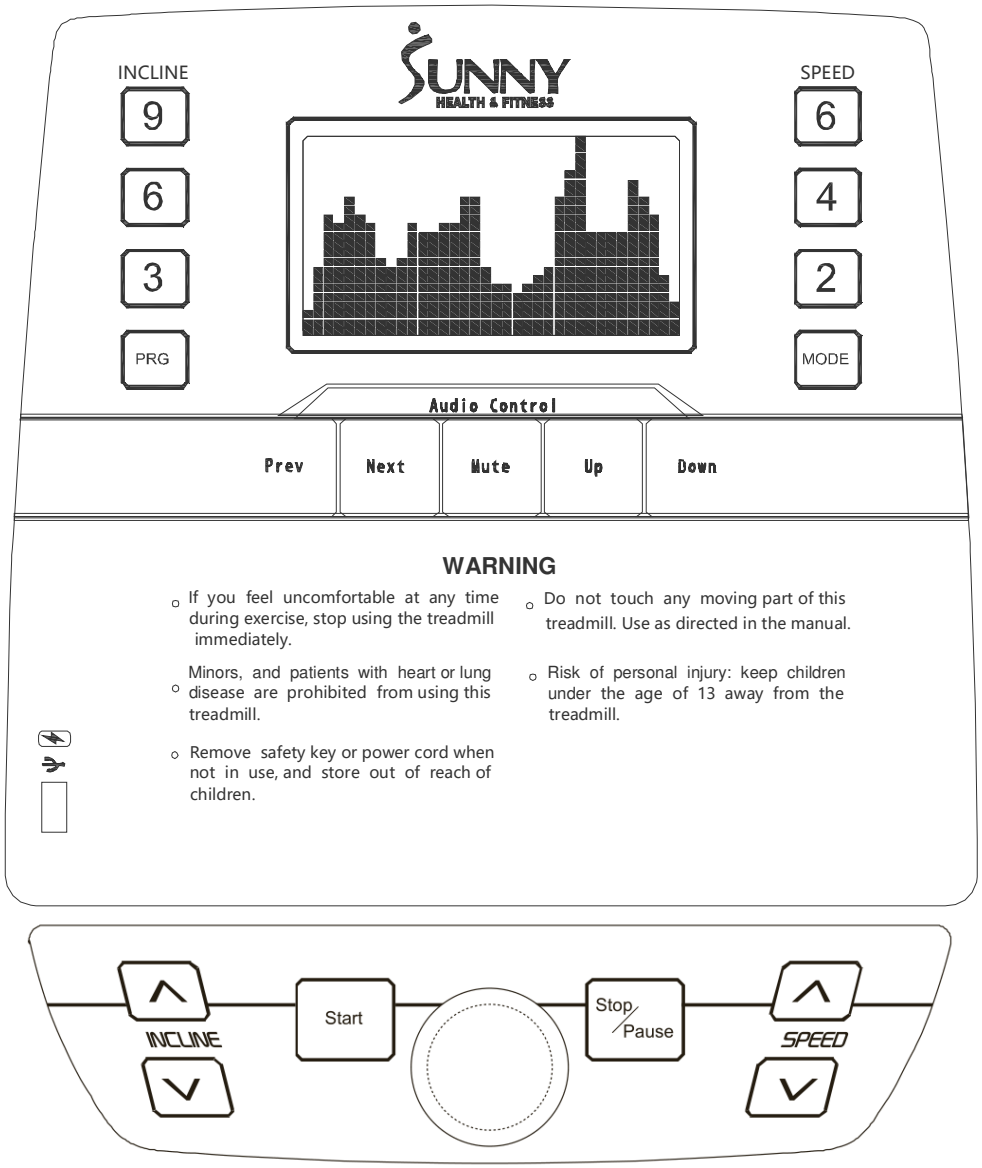

DISPLAYS

Power On:
Press START button, normal startup after 5 seconds countdown.

Program Function:
15 preset programs, 3 customized programs, 4 kinds of motion modes (Time countdown mode, Distance countdown mode, Calories countdown mode, manual mode).

The Safety Key Function:
Remove the **Safety Key (No. 58)** in any mode, and the treadmill will slow down rapidly until it stops. The computer will beep continuously and "---" will be displayed on the window. Buttons will not function when the **Safety Key (No. 58)** is removed. Insert the **Safety Key (No. 58)** onto the computer, the display will light up for 2 seconds and then go into standby mode.

BUTTON FUNCTION

START: Press this button to start the treadmill at an initial speed.
STOP/PAUSE: This button has functions of PAUSE and STOP. When in use, press this button once to PAUSE your workout and the current workout data will still be shown. Press this button again to end your workout session and all data will be deleted and reset to the initial setting.
SPEED ∧/∨: Press this button to increase or decrease the setting speed. When the treadmill is running, press the button gradually to increase or decrease the speed by 0.1 MPH. Holding the button for more than 2 seconds will steadily increase or decrease the speed automatically.
INCLINE ∧/∨: Press this button to increase or decrease the setting incline. When the treadmill is running, press the button gradually to increase or decrease in increment of 1 grade. Holding the button for more than 2 seconds will steadily increase or decrease the incline automatically.
2, 4, & 6 (QUICK SPEED BUTTONS): These buttons are preset to 2, 4, or 6 MPH speeds for convenience.
3, 6, & 9 (QUICK INCLINE BUTTONS): These buttons are preset to 3, 6, or 9 inclines for convenience.
PRG: In standby mode, press this button to select the program from manual mode, P01-P15, U1-U3 and FAT. Manual program is default operating program of the system. The default speed is 0.6 MPH, the maximum speed is 10 MPH.
MODE: In standby mode, press this button to select a MODE. Pressing once will enter H1, the TIME Countdown Mode starting from 15:00 MINS, H2 is the DISTANCE Countdown Mode starting from 1 MILE, and H3 is the CALORIES Countdown Mode which starts from 50 KCAL. When setting each mode, you can press SPEED ∧/∨, INCLINE ∧/∨ to increase or decrease the preset H1, H2, H3 settings then press START to start the treadmill.
PREV/NEXT: When playing music, press this button to choose the previous or next song.
MUTE: Press this button to turn on or turn off the volume when playing music.
UP/DOWN: Press this button to increase/decrease volume when playing music.

DISPLAY FUCTIONS

SPEED: Displays the current speed.
TIME: Displays your elapsed workout time.
DISTANCE: Displays the cumulative distance traveled during your workout.
CALORIES: Displays the total cumulative calories burned during your workout.
INCLINE/PULSE: The split window of PULSE will display your current heart rate. If the pulse is not detected, it will display the current incline.

Data display range of various parameters:
TIME: 0:00 – 99.59 (MIN)
DISTANCE: 0.00 – 99.9 (MILE)
CALORIES: 0.0 – 999 (KCAL)
SPEED: 0.6 – 10.0 (MPH)
PULSE: 50 – 200 (BPM)
INCLINE: 0 – 15

INTERVAL PROGRAMS (P01-P15):

Press the “PRG” button to select between program P01-P15. The “time” will flash. Press “SPEED ∧/∨” or “INCLINE ∧/∨” to set the workout time. Press “START” button to start the program.

Press “SPEED ∧/∨” to change the speed during each section.

Press “INCLINE ∧/∨” to change the incline during each section.

The treadmill will beep 6 seconds and stop when the program is finished.

NOTE: Each program can be divided into 20 sections, the running time of each program is evenly divided. The treadmill will beep for 5 seconds when starting a new section.

Below is program exercise change for mph:

PRG \ Time		Setting time / 20 = running time of each section																			
		1	2	3	4	5	6	7	8	9	10	11	12	13	14	15	16	17	18	19	20
P01	Speed	1.2	1.8	1.8	2.5	3.1	1.8	2.5	3.1	3.1	1.8	2.5	3.1	2.5	2.5	2.5	1.2	1.8	1.8	3.1	1.8
	Incline	1	1	2	2	2	3	3	3	2	2	1	2	2	1	1	3	3	2	2	2
P02	Speed	1.2	2.5	2.5	3.1	3.7	2.5	3.7	3.7	3.7	2.5	3.1	3.7	2.5	2.5	2.5	1.2	1.2	3.1	2.5	1.2
	Incline	1	2	2	2	2	3	3	2	2	2	2	2	3	3	3	4	4	3	2	2
P03	Speed	1.2	2.5	2.5	3.7	3.7	2.5	4.3	4.3	4.3	2.5	4.3	4.3	2.5	2.5	2.5	1.2	2.5	3.1	1.8	1.2
	Incline	2	3	3	2	2	3	3	3	2	2	2	2	4	4	4	6	6	3	2	2
P04	Speed	1.8	3.1	3.1	3.7	4.3	4.3	3.1	4.3	4.3	5.0	5.0	3.1	5.6	3.1	3.1	3.7	3.7	2.5	2.5	1.8
	Incline	2	3	3	2	2	3	3	3	2	2	2	2	4	4	4	6	6	3	2	2
P05	Speed	1.2	2.5	2.5	3.1	3.7	4.3	4.3	3.1	3.7	4.3	5.0	5.0	3.1	2.5	1.8	1.8	3.7	3.1	2.5	1.2
	Incline	3	3	3	4	4	5	5	5	4	4	4	4	5	5	3	3	3	2	2	2
P06	Speed	1.2	2.5	2.5	2.5	3.1	3.7	5.0	5.0	3.7	4.3	5.0	5.0	3.7	2.5	2.5	1.2	3.1	2.5	1.8	1.2
	Incline	3	5	5	5	4	4	4	3	3	3	3	4	4	4	3	3	3	4	3	2
P07	Speed	1.2	1.8	1.8	1.8	2.5	3.1	1.8	2.5	3.1	1.8	2.5	3.1	1.8	1.8	1.8	3.7	3.7	3.1	1.8	1.8
	Incline	4	4	4	4	3	3	6	6	6	7	7	8	8	9	9	6	6	5	4	4
P08	Speed	1.2	1.8	1.8	3.7	4.3	4.3	2.5	3.7	4.3	2.5	3.7	4.3	2.5	2.5	2.5	1.2	1.8	2.5	2.5	1.2
	Incline	4	5	5	5	6	6	6	7	8	9	9	9	10	10	10	12	12	8	6	3
P09	Speed	1.2	2.5	2.5	4.3	4.3	2.5	4.3	5.0	2.5	5.0	5.6	5.6	2.5	2.5	2.5	3.1	3.7	1.8	1.8	1.2
	Incline	5	5	5	6	6	6	4	4	6	6	5	5	8	8	9	9	9	7	4	2
P10	Speed	1.2	2.5	3.1	3.7	4.3	3.1	2.5	3.7	5.0	5.0	3.7	3.7	3.1	2.5	2.5	1.2	2.5	2.5	1.8	1.8
	Incline	5	6	6	6	7	5	8	8	4	4	4	5	5	8	8	10	10	8	6	3
P11	Speed	1.2	3.1	5.0	6.2	4.3	4.3	6.2	6.2	4.3	4.3	6.2	6.2	3.1	3.1	5.6	5.6	3.1	3.1	2.5	1.8
	Incline	4	5	3	2	6	6	2	2	2	2	2	4	5	6	3	2	5	5	2	0
P12	Speed	1.8	2.5	5.6	5.6	3.1	5.6	3.1	5.0	3.1	5.6	4.3	3.1	3.1	4.3	5.6	5.6	3.1	4.3	3.7	1.8
	Incline	1	2	3	2	3	5	5	0	0	2	3	5	7	3	3	5	6	5	3	3
P13	Speed	1.8	3.7	4.3	3.1	5.6	5.6	4.3	3.1	3.1	4.3	5.6	3.1	5.0	3.1	5.6	3.1	5.6	5.6	2.5	1.8
	Incline	3	3	5	6	5	3	3	7	5	3	2	0	0	5	5	3	2	3	2	1
P14	Speed	1.2	1.2	2.5	3.1	3.7	3.1	2.5	1.8	1.2	0.6	1.2	1.8	2.5	3.1	3.7	3.1	2.5	1.8	1.2	0.6
	Incline	4	4	4	4	3	3	6	6	6	7	7	8	8	9	9	6	6	5	4	4
P15	Speed	1.2	2.5	3.7	5.0	3.7	3.7	2.5	2.5	1.2	1.2	1.2	2.5	3.7	5.0	3.7	3.7	2.5	2.5	1.2	1.2
	Incline	3	3	3	4	4	5	5	5	4	4	4	4	5	5	3	3	3	2	2	2

CUSTOMIZED PROGRAM (U1-U3):

The 3 customized programs allow the user to set their own program that can be used immediately.

Setting of customized programs:

In standby mode, press PRG button to the required customized program (U1~ U3). The “time” will flash, press SPEED ∧/∨ and INCLINE ∧/∨ to set the time, press MODE to confirm the setting. Then, set parameters in the first time section. Set speed by pressing SPEED ∧/∨ and set incline by INCLINE∧/∨. Press MODE to complete the setting for the first time section and enter the state to set up parameters for the second time section until the completion of all the 20 time section settings.

Note: Set parameters will be permanently saved until the next time setting. These parameters will not be lost until power disconnection.

Start of customized program:

In standby mode, press PRG button to the required customized program (U1~ U3). After setting up the operation time, press START.

BODY MASS INDEX

Press the PRG button until the window displays FAT to access Body Mass Index. Press MODE to enter F-1, F-2, F-3, F-4, F-5.

F-1 SEX, F-2 AGE, F-3 HEIGHT, F-4 WEIGHT, F-5 is Body Mass Index

Press SPEED ∧/∨ and INCLINE ∧/∨ buttons to set F1-F4 (refer to the chart below). Once you have finished setting F1-F4, press MODE. This will enter you into the set up for F-5 (Body Mass Index). To set F-5, grasp the hand pulses located on the handlebars with both hands and hold them for 3 seconds. The window will display your Body Mass Index. The Body Mass Index is used to test the relation between your height and weight. It is only for reference and is not suitable for the medical use. The Body Mass Index is suitable for both male and female.

NOTE: General **Body Mass Index** score is **20-25%**

Underweight	Below 19.0
Normal	20.0 – 25.0
Overweight	26.0 – 29.0
Obesity	30.0 – and above

BODY MASS INDEX (BMI) CHART:

F-1	Sex	01 Male	02 Female
F-2	Age	10------99	
F-3	Height	40----80 INCHES	
F-4	Weight	44-----330 LBS	
F-5	BMI	⩽19	Underweight
	BMI	=(20---25)	Normal Weight
	BMI	=(26---29)	Overweight
	BMI	⩾30	Obesity

PULSE MEASUREMENT FUNCTION:
While the treadmill is on, hold the hand pulses for 5 seconds and the heart rate value will be displayed. The initial value is the actually measured heart rate, and the display range is 50-200 BPM. In the heartbeat measurement process, there will be a heart shaped icon flashing. Heart rate displayed is for reference only and cannot be used as medical data.

BLUETOOTH AUDIO FUNCTION:
You can connect your mobile device by using Bluetooth to the treadmill to play music. From your mobile device, select T7917-SPEAKER from the list of available devices and connect.
Note: Please control the volume. This affects the tone quality and inner audio circuit.

USB CHARGE FUNCTION:
You can insert the device into the USB module and charge the device.
Note: Do not playing music when the device is charging.

Training in USER Program Mode:

The initial remaining time is 15 MINS. Setting range 5:00---99:00 MINS, step-by-step 1:00 MIN.
The initial remaining calorie is 50 KCAL. Setting range 10---999 KCAL, step-by-step 1 KCAL.
The initial remaining distance is 1 MILE. Setting range 0.5---99.9 MILES, step-by-step 0.1 MILE.
Change in sequence: manually, time, distance, calorie.

NOTE:

When the set value of TIME or Distance counts down to zero, the screen will display END and issue a consecutive beep “---” until the treadmill stops running. After the tone, the settings automatically transfer to manual mode.

When setting the parameters, it can set circulation. For example: the setting range of time is 5:00—99:00, when setting to 99:00, then press SPEED “∧”, return to 5:00. It will keep circulation. You can use SPEED “∧” , “∨” to go up & down.

The countdown time, calories, distance can only be set one at a time. It will operate by the last item. The parameter of the last item will count backwards after setting. The others will count forward.

Caution: The user is cautioned that changes or modifications not expressly approved by the party responsible for compliance could void the user's authority to operate the equipment.

This device complies with Part 15 of the FCC Rules. Operation is subject to the following two conditions: (1) this device may not cause harmful interference, and (2) this device must accept any interference received, including interference that may cause undesired operation.

NOTE: This equipment has been tested and found to comply with the limits for a Class B digital device, pursuant to Part 15 of the FCC Rules. These limits are designed to provide reasonable protection against harmful interference in a residential installation. This equipment generates, uses and can radiate radio frequency energy and, if not installed and used in accordance with the instructions, may cause harmful interference to radio communications. However, there is no guarantee that interference will not occur in a particular installation.
If this equipment does cause harmful interference to radio or television reception, which can be determined by turning the equipment off and on, the user is encouraged to try to correct the interference by one or more of the following measures:

-- Reorient or relocate the receiving antenna.
-- Increase the separation between the equipment and receiver.
-- Connect the equipment into an outlet on a circuit different from that to which the receiver is connected.
-- Consult the dealer or an experienced radio/TV technician for help.

FCC Radiation Exposure Statement

This equipment complies with FCC radiation exposure limits set forth for an uncontrolled environment. This equipment should be installed and operated with a minimum distance of 20cm between the radiator and your body.

This transmitter must not be co-located or operating in conjunction with any other antenna or transmitter.

TROUBLESHOOTING

PROBLEM	POSSIBLE CAUSE	SUGGESTED ACTION
----------	The safety key falls off.	Put the safety key back.
		Change the safety key switch or sensor. If it still doesn't work, change the computer module.
E1	Inverter communication error.	Change the communication middle wire or the communication lower wire.
		Change the computer module.
E2	Stall speed production.	Check if DC motor wire was inserted well.
		Change the control board.
		Check if voltage is AC 100-120V.
E3	Speed inductor failed.	Check if the wire of optical sensor were inserted properly.
		Change the control board.
E4	Incline learning failed.	Check if the wire of incline motor is inserted properly.
		Change the control board.
		Change incline motor.
E5	Over current production.	Check if the resistance is too big.
		Change DC motor.
		Change the control board.
E6	Incline inductor failed.	Check if the wire of incline motor were inserted properly.
		Change incline motor.
No display	No electricity or damage.	Check if the overload protector is tripping off. If yes, just press it.
		Check if the power switch, overload protector, power cord, and the control board were inserted well.
		Change the control board.

NOTE: If you are unable to resolve an issue using the troubleshooting guide above, please contact Customer Service at support@sunnyhealthfitness.com

Version 3.1

CONNECT WITH US

FOR FITNESS ARTICLES, VIDEOS & WORKOUTS

@SUNNYHEALTHANDFITNESS

@SUNNYHEALTHFITNESS

@SUNNYHEALTHFIT

/SUNNYHEALTHFITNESS

/SUNNYHEALTHANDFITNESS

SUNNY HEALTH & FITNESS

WWW.SUNNYHEALTHFITNESS.COM