amarey

A90 Robotic Vacuum Cleaner User Manual

Please read this instruction carefully before usage and keep it properly

1. Important Safety Instructions

• If you have special objects that could potentially be damaged by the bumping, remove these objects from the floor.

• Do not let kids sit or stand on Robot. Children and pets should be supervised when Robot is operating.

• Do not make Robot for outdoor use.

• Do not clean wet messes with your Robot.

• Do not use Robot to pick up spills of water bleach, paint, and other chemicals.

• Do not keep Robot at a freezing temperatures.

• Do not use Robot to pick up flammable materials such as gasoline. printer, etc.

• Ensure that Robot cannot get caught on clothing, socks, pull cords for blinds or curtains, power cords, etc.

• Only charge the following amarey batteries: maximum 14.4V,2600mAh Lithium-ion battery. Other type of batteries may burst causing injury. Always contact amarey Customer Service Center for the correct replacement of battery.

• Always remove the battery from Robot and accessories before long-term storage or transportation.

• The battery must be removed before Robot is disposed. Remove Robot's two Battery Door's screws, and then remove the battery by disconnecting the quick connector.

• WARNING Chemical Exposure: If the battery pack is leaking, do not allow the liquid to come in contact with skin or eyes. If contact has been made, wash the affected area with copious amounts of water and seek medical advice. Place the battery (the used battery pack included when the robot will be disposed) in a sealed plastic bag and dispose of safely according to local environmental regulation.

• WARNING Fire or Explosion Hazard: Do not crush or dismantle battery packs, Do not heat or place the battery

the battery pack near any heat source or direct sunlight, Do not incinerate or short-circuit the battery pack. Do not subject batteries to mechanical shock.

Battery and Charging/Information

Lithium-ion Battery

Important: Lithium-ion batteries and products that contain Lithium-ion are subject to stringent transportation regulations. If you need to ship this product (with the battery included) for service, travel or any other reason, you MUST comply with the following shipping instructions:

• Remove the Lithium-ion battery from the product.

• Place a piece of tape over the battery's metal charging contacts.

• Reinstall the battery (with the tape on it) in the product and secure the battery door.

• Pack the product in original packaging or in your own packaging that prevents any movement during transportation.

• Ship via ground transportation only(no air shipping).

Battery Storage

• If storing Robot a long time, remove the battery firstly. Then store Robot and the battery in a cool, dry place.

FCC Warning

This device complies with part 15 of the FCC Rules. Operation is subject to the following two conditions:

(1) This device may not cause harmful interference,

(2) This device must accept any interference received, including interference that may cause undesired operation. Any Changes or modifications that not expressly approved by the party responsible for compliance could void the user's authority to operate the equipment.

This Transmitter must not be co-located or operating in conjunction with any other antenna or transmitter.

This equipment complies with RF radiation exposure limits set forth for an uncontrolled environment.

This equipment should be installed and operated with minimum distance 20cm between the radiator and your body.

CE Warning

1. Risk of explosion if battery is replaced by an incorrect type. Dispose of used batteries according to the instructions.
2. Adapter shall be installed near the equipment and shall be easily accessible.
3. The operating temperature of the device can’t exceed 40℃ and shouldn’t be lower than 0℃.
4. The plug considered as disconnect device of adapter.
5. The device complies with RF specifications when used at 20cm from the body.

Hereby, Shenzhen Ankobot Robot Co.,Ltd declares that this product is in compliance with essential requirements and other relevant provisions of Directive 2014/53/EU. This product is allowed to be used in all EU member states.

2. About Your Amarey A90

①.Top View

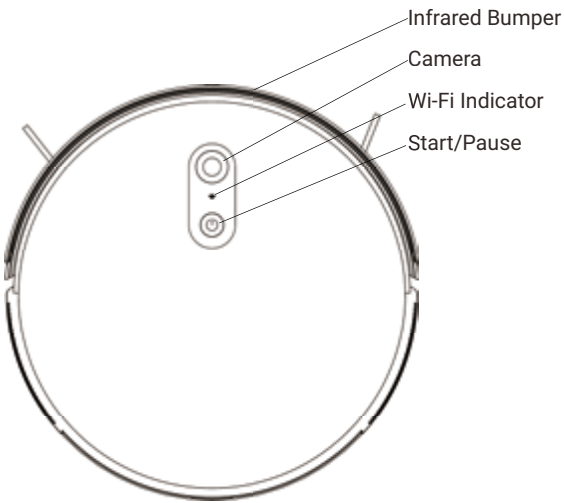

②.Bottom View

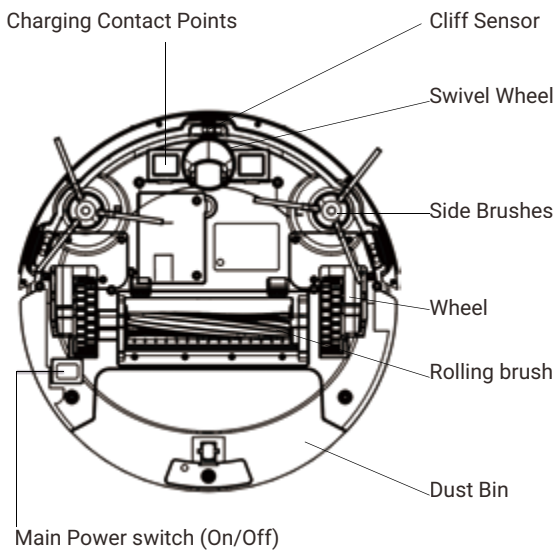

③. Dust Bin

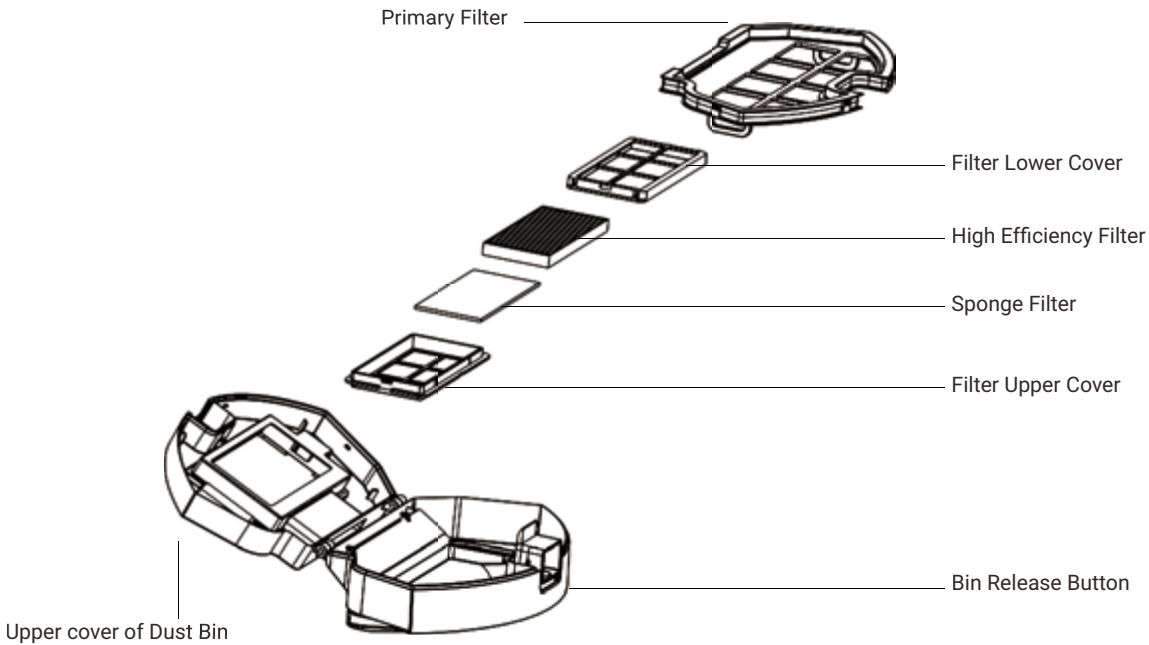
Primary Filter
Filter Lower Cover
High Efficiency Filter
Sponge Filter
Filter Upper Cover
Bin Release Button
Upper cover of Dust Bin

④.Charging Dock/Adapter

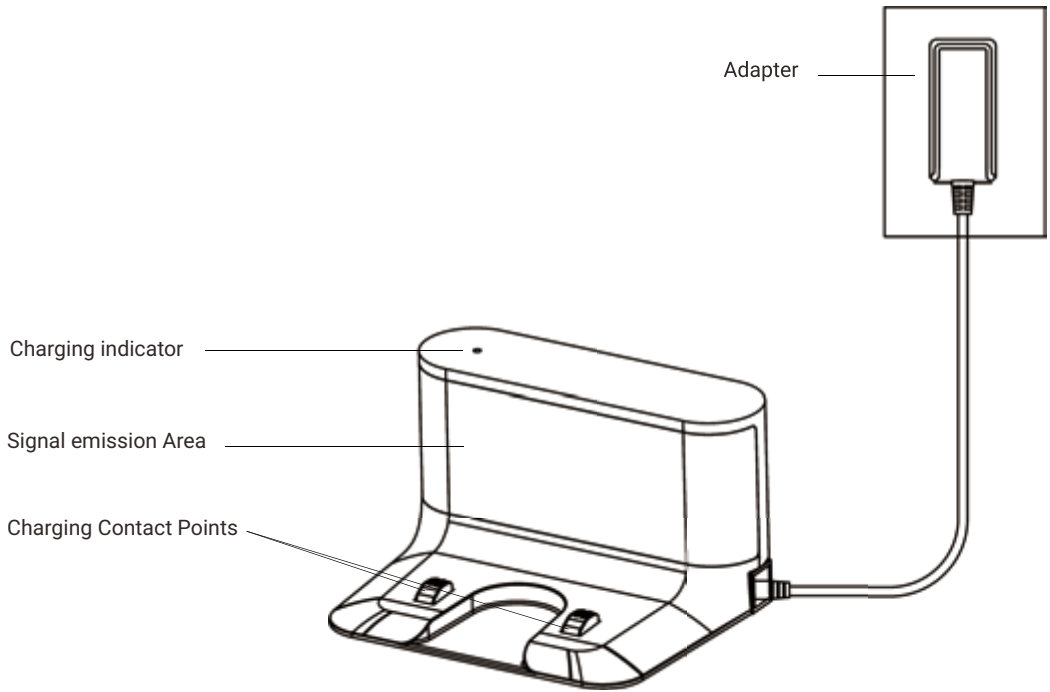

⑤.What’ s in the Box

amarey A90

Charging Base

4 X Side Brush

Sponge Filter and
High Efficiency Filter

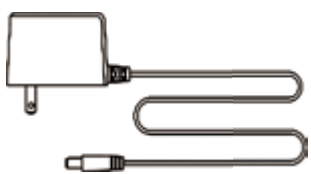

Adapter

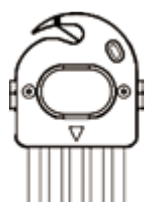

Cleaning Tool

3. Using Your Amarey A90

①.Important Tips Before Using A90

Before robotic vacuum works, please refer to the following guidelines to check the cleaning area.

Remove power cords and small objects from the floor that may entangle A90.

A90 is not suitable for long-pile carpet. If the carpet has tassels, please roll up them before usage.

Anti-fall sensors can prevent A90 from falling down stairs. But it may work less effectively if sensor is dirty or work on reflective or very dark floor. It is recommended to place a boundary strip to block off.

Keep A90 away from spaces lower than 2.4 inches to prevent A90 from getting stuck. If necessary, place a barricade to block off the area or elevate your appliance.

②. Preparations

(1) Position the Charging Base on a hard level surface and against a wall.
Ensure the place is an open & uncluttered area leaving at least 4ft in the front and 1.6ft on both sides.

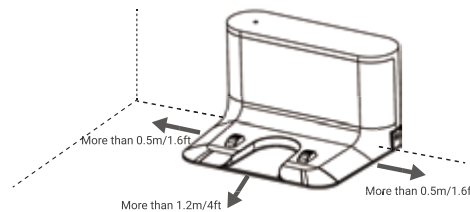

(2) Connect the round end of the adapter into the power socket on the Charging Dock and the other end into a wall outlet. When connect well, the white light will be on. Otherwise, the robot can't dock.

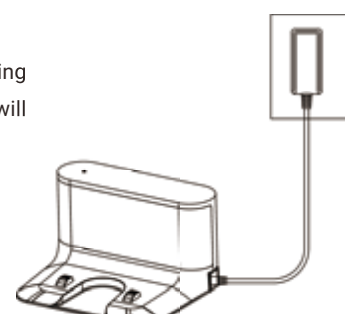

（3）Before usage, Please remove the protective strips.

(4) Install the side brushes by pressing them into each slot until you hear the a “click”.

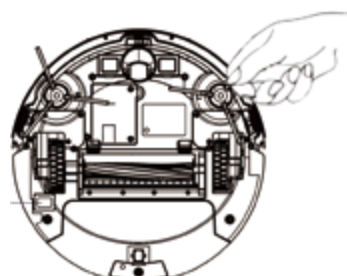

(5) Turn on the Main Power Switch at the bottom of Robot (1 refer to power on, 0 refer to power off). The robot can start working after startup music.

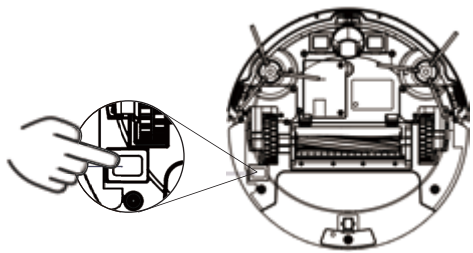

③. Charging Robot

Place robot onto the Charging Dock, ensure the Charging Contact Points on Charging Dock and the bottom of robot are contact well. The robot will start charging after hearing “in charging”. Battery fully charged may cost around 4.5h.

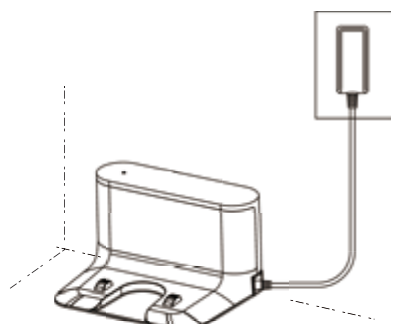

Tips: 1. The robot can’t power on when in low battery. Please turn on the power switch at the bottom and put robot on charging base, the device will power on automatically. When the power >20%, it can work normally.

2. Lithium battery pack is built in the robot. To maintain battery performance, please keep the robot in charging state.

④. Download and Install APP

(1) Download and install app

Download APP by scanning below QR code.

(2) Reset Wi-Fi

Press the key “ ⏻ ” for 5S, and you will hear voice prompt "Reset WI-FI, enter network configuration mode", and the blue Wi-Fi indicator will flash rapidly, which means the robot start entering network configuration mode.

(3) Add device

Enter the home page of APP, click "+" in the upper right corner and add device according to the APP prompt. The device will show in the home page list after successfully added.

Tips:

·Due to App upgrading, the operation may have little difference with above instruction, please follow the instruction in APP.

·Only support 2.4GHz WIFI, not 5GHz.

⑤.Clean Mode

(1) Auto Cleaning

Method 1: Power on robot, after the startup music, press ⏻ button on panel, auto cleaning will start.

Method 2: Click the “Start cleaning” button thru APP to start cleaning (press the pause button to pause the current task).

Reminder:

If power is less than 20%, Robot will not be able to carry out cleaning task, please charge it before next cleaning.

If power is less than 20% during cleaning, the robot will dock to charging base. When power up to 80%, it will start resume cleaning.

(2) Spot Cleaning

Click Spot ⏻ cleaning on APP Remote Control interface. After hearing “Start Spot Cleaning”, the robot will clean in “Spiral” route. When cleaning is finished, robot will keep in standby mode.

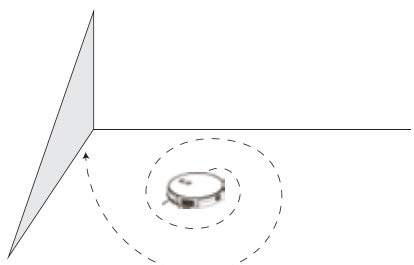

(3) Schedule Cleaning

Schedule cleaning can be set thru APP. The robot will automatically start cleaning at the specified time you set and return to the charging base after cleaning.

(4) Smart Area

1.Area cleaning

After Smart Map generated successfully, the user can divide the map into different areas according the cleaning needs. You can set one or more cleaning areas. Select the areas to clean after setting, the robot will only clean the selected area, and do not clean other areas.

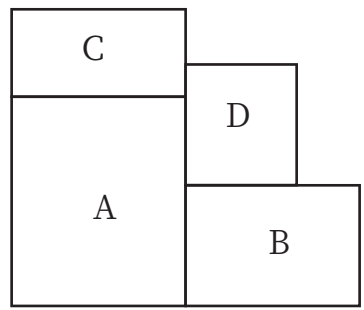

2.Set up boundary area

In addition, some areas can be set as forbidden zones. The robot will not enter the boundary area after setting, only clean other areas.

Reminder:

• Please make sure the robot has completed the smart map building before use this function. Re-building map will lose the boundary area you set before.

• The boundary area may be invalidated due to moving the charging base or furniture. So please do not to move or interfere the robot during cleaning.

Due to APP updating, the functions and details may have some changes, please refer to the actual version.

(5) Docking Mode

Auto mode：When the battery power is low, Robot will prompt “Low power, start docking mode”, and start finding charging base to recharge.

Manual mode：In any cleaning mode, press clean key twice or use app control, after voice prompt "start docking mode”, the robot will automatically find the charging base to recharge.

（6）Power Off

If the robot is not used for a long time, please power it off thru turning off the power switch at the bottom.

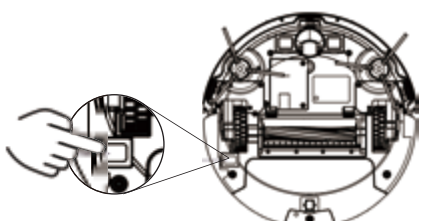

4. Product Maintenance

Tip: Before maintenance of the robot and spare parts, please turn off the main switch at the bottom.

①.Dust Bin

Press Bin Release Button to remove dust bin and clean it.

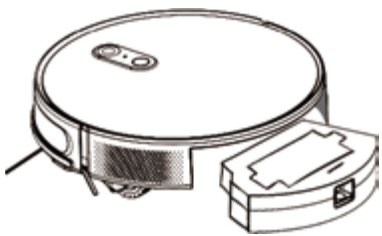

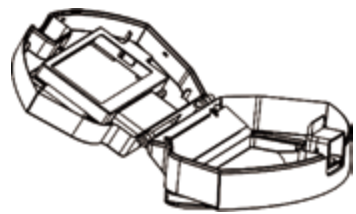

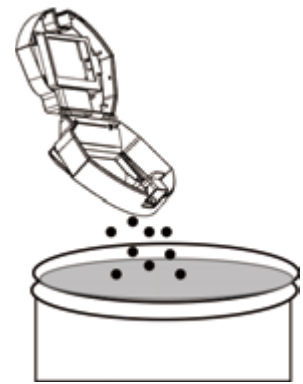

Tip: Please empty the dust bin after each usage.

②.Filters

(1) Take the filters out from the Dust Bin.

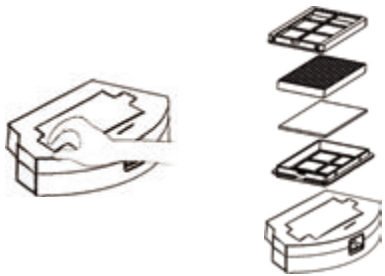

(2) Clean the Dust Bin and filters with provided Cleaning Tool.

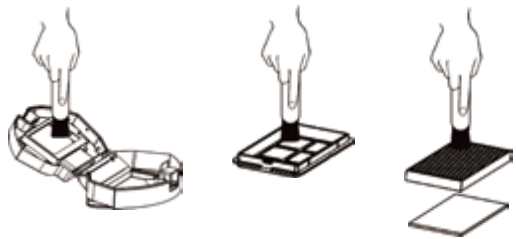

(3) Put the filters back together in the Dust Bin.

Tip: Clean the filter once a week and replace it every 2 months.

③. Rolling Brush

Remove brush cover, take out the rolling brush, clean the vacuuming aisle by a cloth. If the rolling brush has hairs winded, please cut them down with the knife on cleaning tool.

1

2

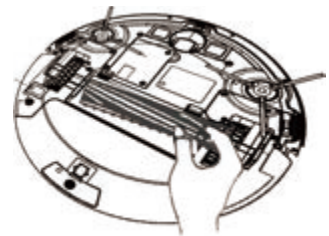

3

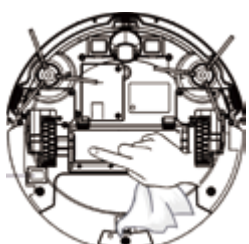

4

④.Side Brush

Pull out the side brushes, use the knife on cleaning tool to cut winded hairs, and then use cloth to clean it.

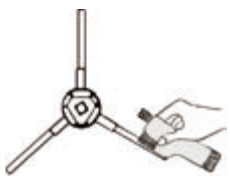

⑤.Swivel Wheel

Clean the swivel wheel with a cloth.

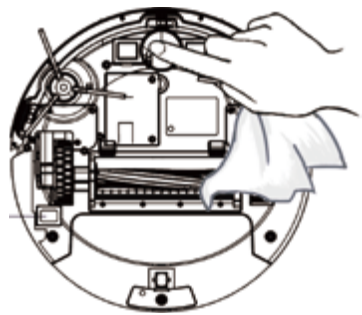

Tip: Please clean the rolling brush and side brushes once a week, change the side brush every 3 months, and change the rolling brush every 6 months.

⑥.Cliff sensor

Use a dry cloth to clean cliff sensors to ensure the sensitivity.

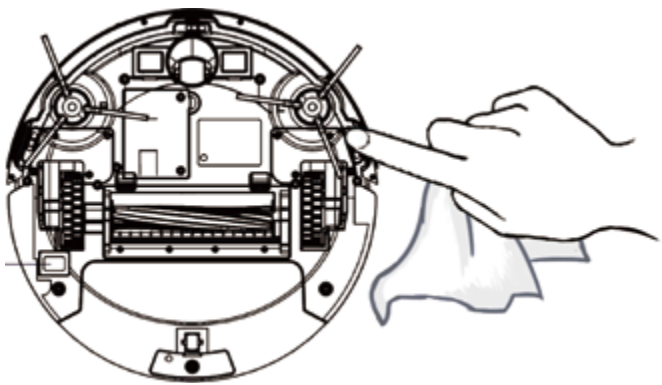

5. Troubleshooting

No.	Problems	Causes	Solutions
1	Robot cannot be charged	Charging Dock has no electricity.	Ensure the charging cord is plugged into the dock and wall outlet, and the light on the Charging Dock is white.
		The poor connection of the charging contact points.	Clean the charging connection points on both Charging Dock and bottom of the Robot with dry cloth.
2	Robot gets stuck	Get stuck by objects.	Pick up objects like clothing, scraps of paper, power cords, and fragile objects to avoid Robot stuck before it starts working.
		Get stuck under furniture.	Robot's slimmer body would work with most of the furniture but it still probably gets stuck. Notice: the lowest height is 3 inches.
		Get stuck on carpet.	Robot is not suitable for use on long-pile carpet. Before using Robot on a short-pile area rug with tasseled edges, please fold area rug's edges to prevent Robot from tangling.
3	Robot cannot dock	Charging Dock has no electricity.	Ensure the charging cord is plugged into the dock and wall outlet, and the light on the Charging Dock is white.
		The location of Charging Dock is not correct.	Position the Charging Dock on a hard level surface (not on a dark-colored surface or high-pile carpet) and refer to the suction"position the charging dock"in Manual.
4	Side brush falling down	The side brush is not installed correctly.	Put the side brush into the slot and hear a "click".

5	Left / right wheel abnormal	The left / right wheel may be entangled.	Check left / right wheel for entanglement and clean the side wheel.
6	Weak suction	The Dust Bin is full	Empty Dust Bin
		Filter clogged or wet	Clean and dry the filter or replace it with a new one.
7	Cannot schedule cleaning	The Main Power Switch on the bottom of Robot is off	Turn on the Main Power Switch at the bottom of Robot.
		Power is too low to start cleaning	Charge Robot.
		The scheduled time have been set incorrectly.	Set schedule cleaning according to APP Instruction.
8	Left/right side brush abnormal	Left / right side brush may be entangled.	Check whether the left/right side brush is entangled and clean the side brush.
9	Rolling brush abnormal	Rolling Brush is stuck or entangled.	Check whether the rolling brush is entangled and clean the rolling brush.
10	Robot suspended in the air	Robot is suspended or stuck near a cliff.	Please put the robot on the floor， or clean the cliff sensors
11	Camera abnormal	Camera is dirty.	Wipe camera with alcohol cotton ball gently.
12	Bumper abnormal	The bumper may get stuck.	Pat the left, middle and right sides of the infrared bumper to make it flexible.
13	Dust Bin abnormal	Dust Bin maybe installed incorrectly.	Install Dust Bin again.

6. Specifications

A90 Robotic Vacuum Cleaner			
Robot Vacuum		Charging Dock	
Dimensions	325*325*80mm	Dimensions	170*137*95mm
Battery	2600mAH	Adapter Input Voltage	AC 100-240V
Wireless connection	2.4GHz Wi-Fi	Rated Output	19V/600mA
Rated Power	28W	Rated Frequency	50/60Hz
Rated Voltage	14.4V	/	
Charging Time	5H	/	
Working Hours	120min	/	

7.Amarey Customer Care

+86-400-676-0068

service_cn@iamarey.com

www.iamarey.cn

Manufacturer: Shenzhen Ankobot Robot Co.,Ltd

Address : Room 2208, Office Building 4, Chongwen Garden, No.1 Tangling Road, Fuguang Community, Taoyuan Street, NanShan District, ShenZhen

FCC Warning

This device complies with part 15 of the FCC rules. Operation is subject to the following two conditions: (1) this device may not cause harmful interference, and (2) this device must accept any inte rference received, including interference that may cause undesired operation.

Changes or modifications not expressly approved by the party responsible for compliance could void the user's authority to operate the equipment.

NOTE: This equipment has been tested and found to comply with the limits for a Class B digital device, pursuant to part 15 of the FCC Rules. These limits are designed to provide reasonable protection against harmful interference in a residential installation. This equipment generates uses and can radiate radio frequency energy and, if not installed and used in accordance with the instructions, may cause harmful interference to radio communications. However, there is no guarantee that interference will not occur in a particular installation. If this equipment does cause harmful interferenceto radio or television reception, which can be determined by turning the equipment off and on, the user is encouraged to try to correct the interference by one or more of the following measures:

- Reorient or relocate the receiving antenna.
- Increase the separation between the equipment and receiver.
- Connect the equipment into an outlet on a circuit different from that to which the receiver is connected.
- Consult the dealer or an experienced radio/TV technician for help.

Radiation Exposure Statement

This equipment complies with FCC radiation exposure limits set forth for an uncontrolled environment. This equipment should be installed and operated with minimum distance 20cm between the radiator and your body.