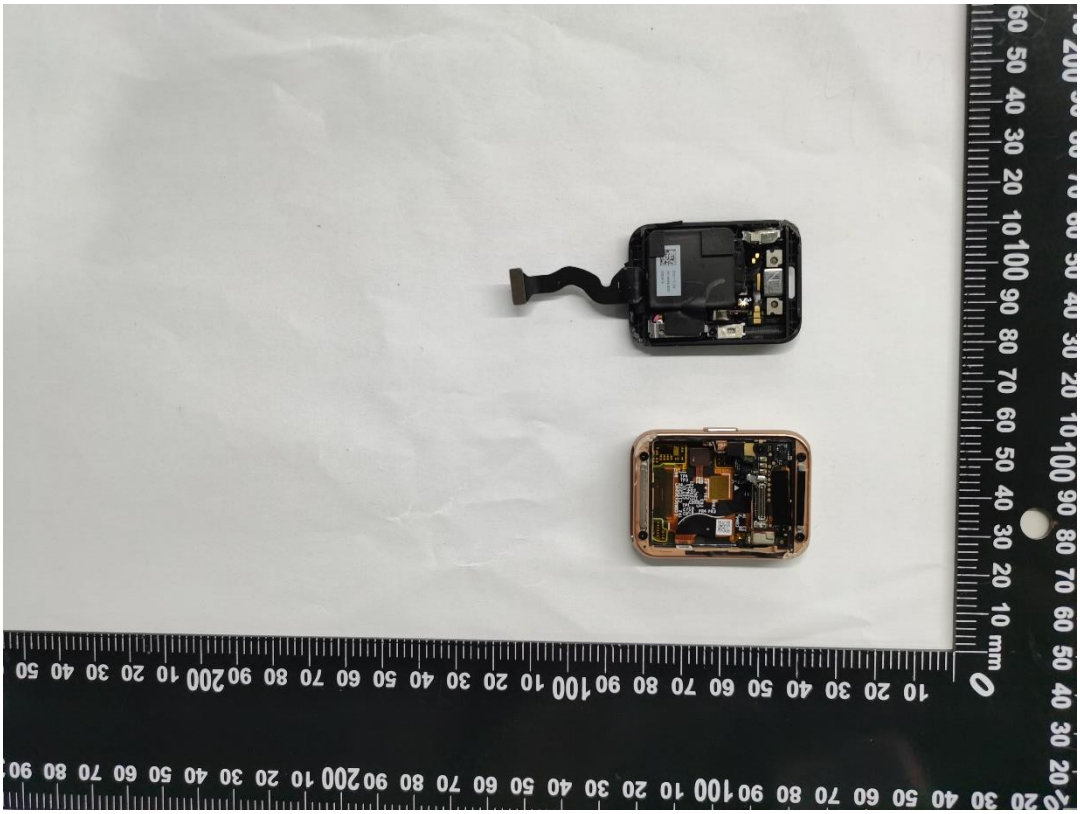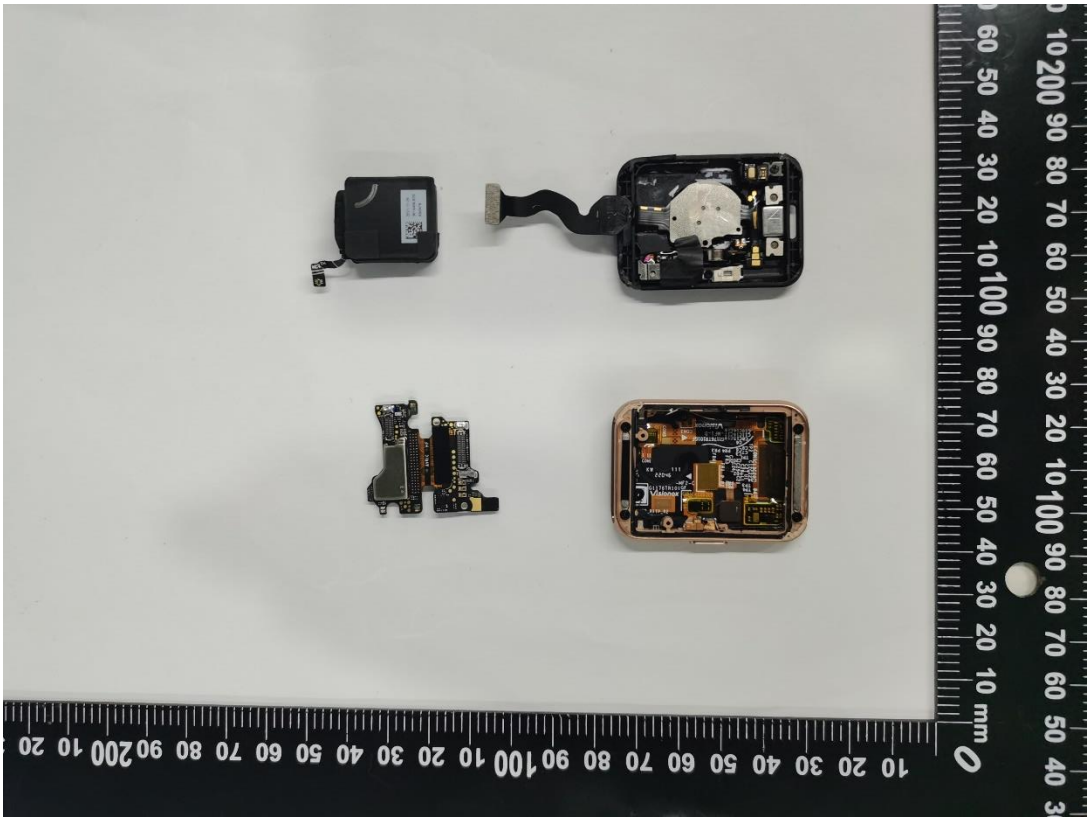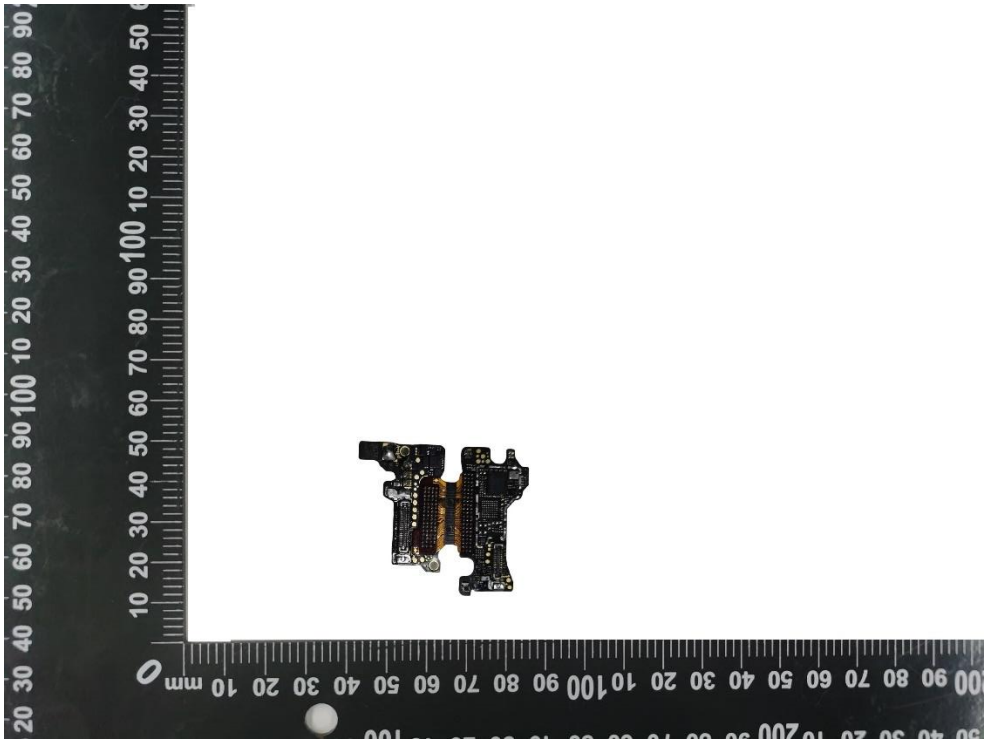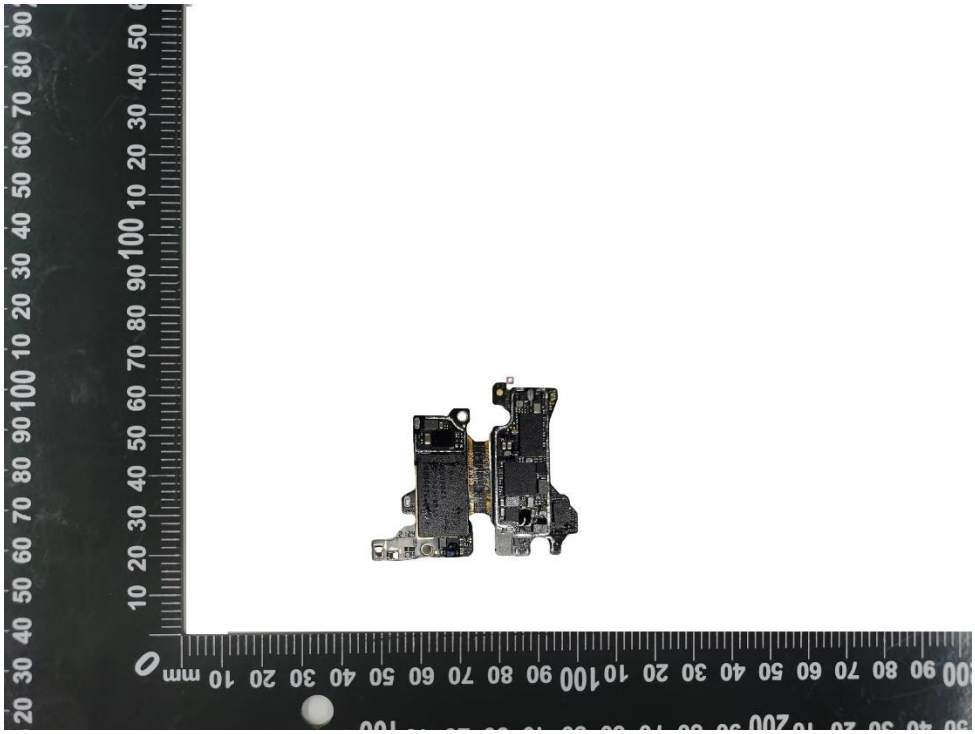Internal Photos of YDA-B09S