Scan for Wechat Account

Scan to download APP

Address: 4th floor, Building 17, Innovation Park, Wenyixi Road 998#, Yuhang District, Hangzhou, Zhejiang Province, PRC
Web: www.kejixia.cn Email: contact@sciener.cn Hotline: 400-0658-851

Copyright: Sciener 2017

Sciener

www.kejixia.cn

Sciener Smart Lock

M503

Manual

171219 - VER3.0

Please read the manual before installation carefully and keep this manual at a secure place.

- Please refer to sales agents and professionals for information not included in this manual. For more support, please call 0571-81902879 /86 15381172306.
- We reserve the right of upgrading the product without prior notice.

Parameters

Model:	M503
Dimensions:	Front W70mm x H155mm x T12mm
	Back W71mm x H162mm x T30mm
Material:	Front panel: Zinc alloy
	Back panel: Industrial plastic
	Lock body: Zinc alloy
Gross weight:	1.2KG
Communication method:	Bluetooth 4.1ble

Supporting systems:	Android 5.0/IOS7.0
Stand-by current:	≈35μA
Operating current:	≈200 mA
Power supply:	4 AA
Unlock time:	≈1.5 s

Parts list

- Door lock frame must be greater than 110mm, and door thickness must be between 35-45 mm

Package list:

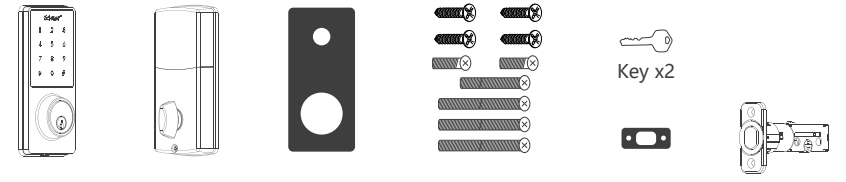

Front panel Back panel Rubber pad Screw Strike plate Lock body

Precautions before installing and adjusting the door lock

- Before installing the lock, please check that all the accessories are present. If your door needs to drill holes across, please seek professional help in order to avoid unnecessary property damage.
- Before installing the lock, please connect the front panel of the lock to the back panel, and pair the lock with the APP.

Adjust the lock before installation

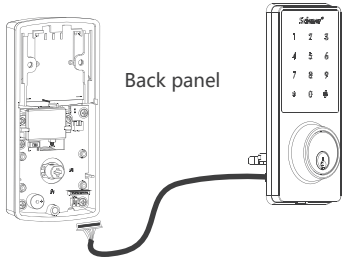

- Pull out the cables from the front and back panel, and connect them as shown in the figure

Pair the lock with APP

Important

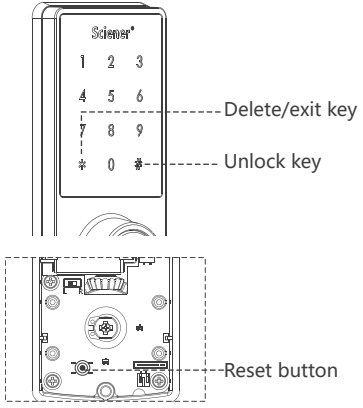

- **Pair with App using bluetooth**

After power is on, while the front panel touchscreen backlight is off:

1. Tap the touch screen to activate
2. Open the app after voice prompt "please add bluetooth administrator"
3. Tap profile picture on the top left corner, select "add lock"-"door lock"
4. Select the lock device name that is found. After adding successfully, the page will jump to the lock list. If not successful, repeat the above steps or long press the reset button in the back panel until you hear the voice prompt

Install latch/deadbolt and cylinder

- Please install under the guidance of a professional
- In case of special circumstances, Please handle with care to avoid damage!

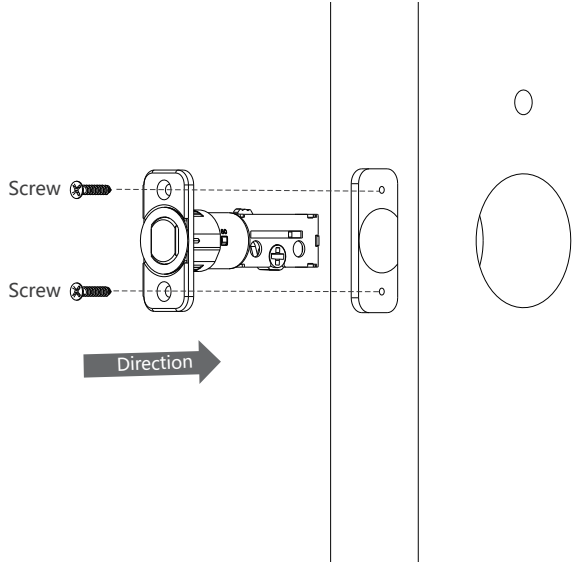

Warning

- **Installation notes**

If your door lock hole, panel mounting holes and the lock do not match, please refer the illustration (drilling hole) and adjust the hole. Non-professionals shall not drill holes to avoid causing damage!

Install front/back panel

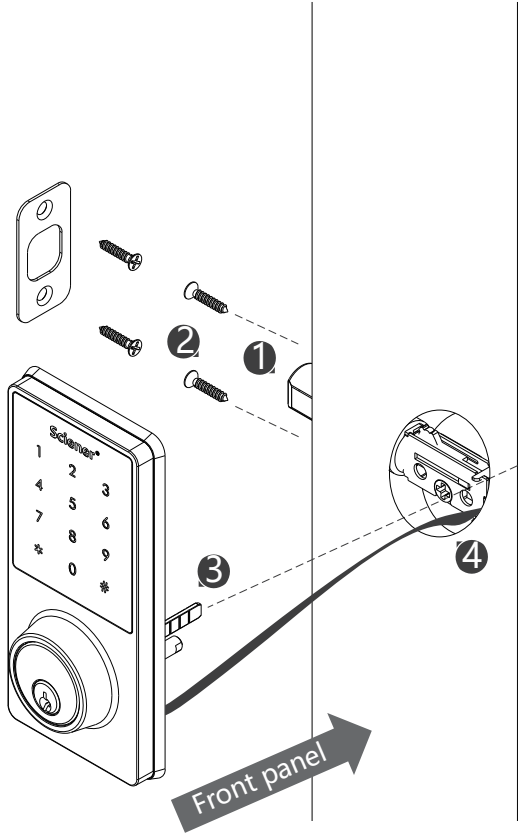

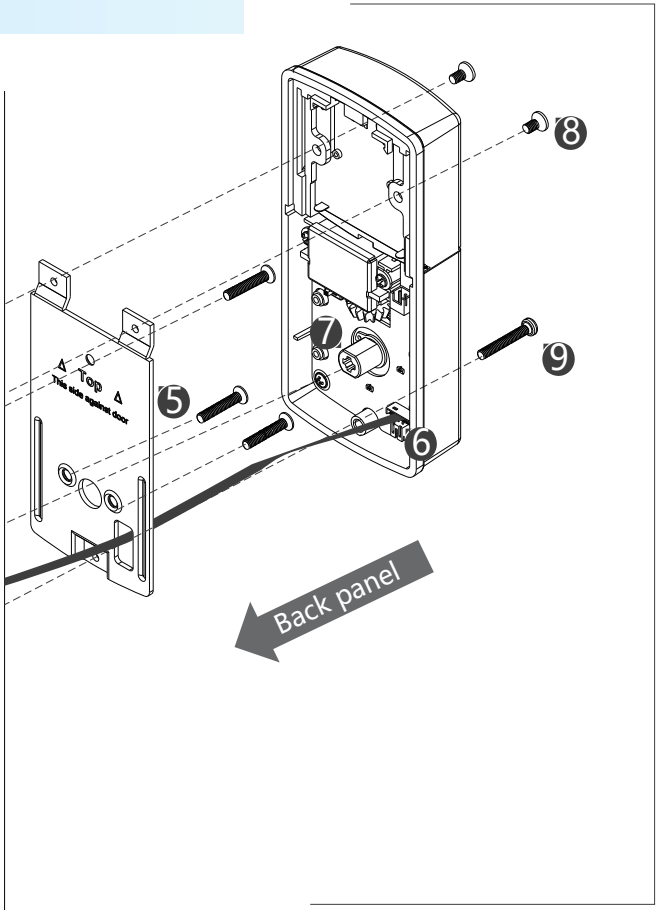

- **Installation steps:**
- Lock body: Fix the lock body (figure 1) with two screws (figure 2)
- Front panel: Fix the rubber pad on front panel and press it on the door (figure 3). Pull the power cable through the holes in the door (figure 4) , the iron plae (figure 5) and fix the iron plate with screws.
- Back panel: Connect the back panel with the power cable (figure 6), adjust the position of back panel and press it on the iron plate, make sure the spindle goes across the circular hole in the iron plate and into the lock body (figure 7). Fix the back panel with screws (figure 8 and figure 9).

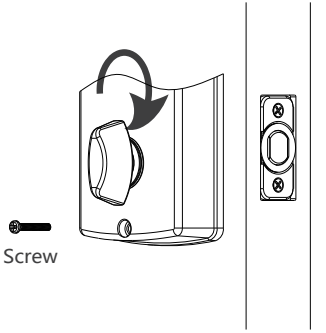

- **Bolt switch test**
  Turn the bolt switch, if the bolt come out and retract properly, fix the back panel with a screw.

Install batteries and cover

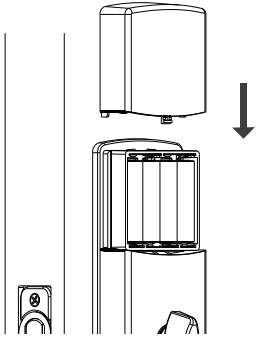

- Pull up the slide cover of the back panel, install 4 AA batteries and push the cover back to its original position.

Front panel and features

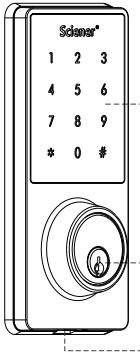

Digital touch screen

Mechanical key/cylinder

Micro USB emergency power supply port

*At times of low battery power, please use Micro USB power source to recharge.

Adjust door opening direction

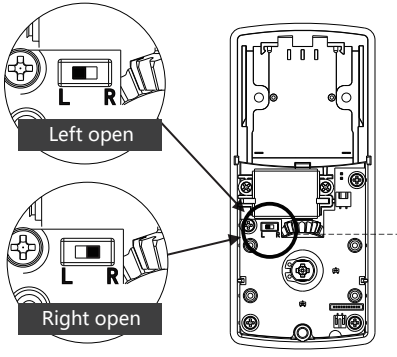

- When install the lock, please adjust the left-right switch in the back panel to match the actual opening direction of the door.

left/right switch

Judge the opening direction of the door

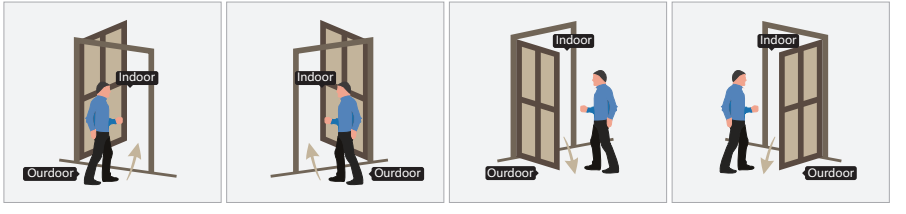

1 Left in

2 Right in

3 Left out

4 Right out

Care and Maintenance

- 1. Please keep the lock from direct contact with corrosive liquids.
- 2. Please do not hang anything on the door handle.
- 3. If the door deforms, please adjust the strike plate accordingly, so that the bolt can stretch fully into the strike plate.
- 4. Please replace with new batteries when the low battery warning is prompted.
- 5. Please keep the mechanical keys at a secure place.

FCC WARNING

This device complies with part 15 of the FCC Rules. Operation is subject to the following two conditions: (1) this device may not cause harmful interference, and (2) this device must accept any interference received, including interference that may cause undesired operation.

Any changes or modifications not expressly approved by the party responsible for compliance could void the user's authority to operate the equipment.

NOTE: This equipment has been tested and found to comply with the limits for a Class B digital device, pursuant to Part 15 of the FCC Rules. These limits are designed to provide reasonable protection against harmful interference in a residential installation. This equipment generates, uses and can radiate radio frequency energy and, if not installed and used in accordance with the instructions, may cause harmful interference to radio communications. However, there is no guarantee that interference will not occur in a particular installation.

If this equipment does cause harmful interference to radio or television reception, which can be determined by turning the equipment off and on, the user is encouraged to try to correct the interference by one or more of the following measures:

-- Reorient or relocate the receiving antenna.

-- Increase the separation between the equipment and receiver.

-- Connect the equipment into an outlet on a circuit different from that to which the receiver is connected.

-- Consult the dealer or an experienced radio/TV technician for help.

To maintain compliance with FCC’s RF Exposure guidelines, This equipment should be installed and operated with minimum distance between 20cm the radiator your body: Use only the supplied antenna.