Product Name:4K UHD ALL-IN-ON USB Camera
Brand: VHD
Model: M1000
Manufacturer:ValueHD Corporation
Address:3/F, No.2, Honghui Industrial Park, Xin'an Street, Bao'an District, Shenzhen, 518101, China

1 Package Contents

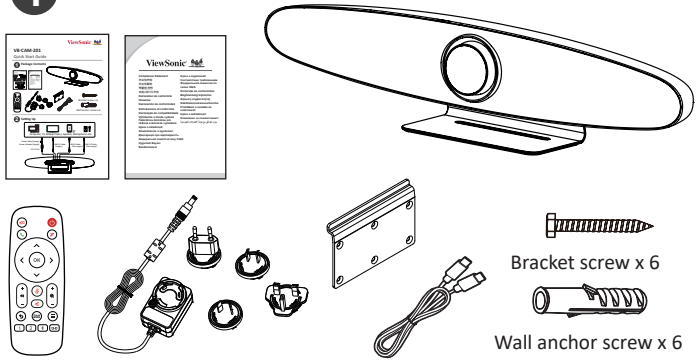

2 Setting Up

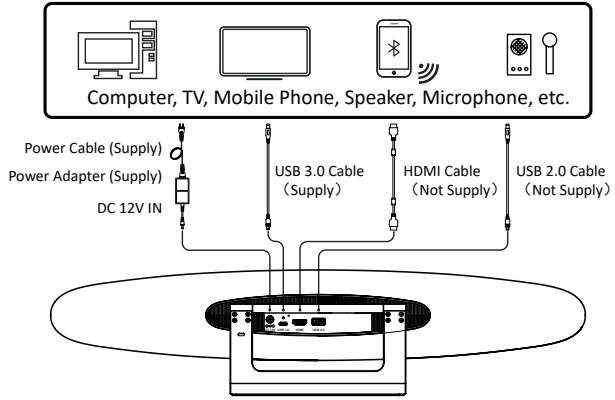

3 Remote Control Model:M1000RF4CE

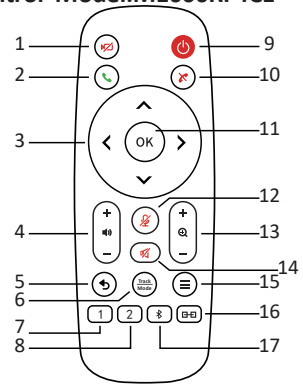

Items	Key	Function
1	Camera Disable	Disable / Enable the video
2	Start Call	Answer / Start call/ Enter call interface (for Skype for business only)
3	Control Key	Menu Control / Camera moving direction control
4	Audio Volume Up/Down	Audio volume control
5	Return	Return to previous menu page
6	Track Mode	Switch Mode between Manual and Tracking mode.
7	Preset 1	Set and Memo current camera position after long pressing and call the position after short pressing.
8	Preset 2	Set and Memo current camera position after long pressed and call the position after short pressed.
9	Standby	Come into Standby mode after long pressed and return to normal mode after short pressed
10	Hang Up	Hang up the call / Leave meeting (for Skype for business only)
11	OK (Confirm)	Confirm selection / Camera returns to home position.
12	Mute	Disable / Enable the speaker
13	Zoom	Zoom In / Out
14	Speaker	Disable / Enable the speaker
15	Menu	Call / Hide Menu
16	Remote Control Pairing	Pairing the camera with on hand remote control
17	Bluetooth	Disable / Enable Bluetooth function

4 Menu Setting

Main Page

MENU
- Setting
- Noise Reduction
- Information
- Restore Default
- Exit

System / Camera Setting

SETTING

Language	English
EPTZ	On
Zoom Limit	3X
HDMI Format	1080P30
Tracking Mode	Off
Return	

Noise Reduction Setting

NOISE REDUCTION

2D NR	Auto
3D NR	2
Return	

System Information

INFORMATION

Version	1.1.0_9128
Model	M7.VC
Date	2020-08-01
Return	

System Restore

RESTORE DEFAULT
- Yes
- No
- Return

5 Installation

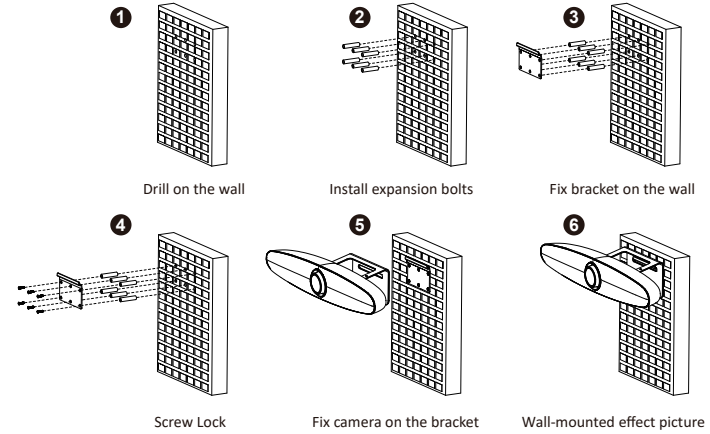

Compliance Information

FCC Statement

NOTE: This equipment has been tested and found to comply with the limits for a Class B digital device, pursuant to part 15 of the FCC Rules. These limits are
designed to provide reasonable protection against harmful interference in a
residential installation. This equipment generates uses and can radiate radio
frequency energy and, if not installed and used in accordance with the instructions, may cause harmful interference to radio communications. However, there is no guarantee that interference will not occur in a particular installation. If this equipment does cause harmful interference to radio or television reception, which can be determined by turning the equipment off and on, the user is encouraged to try to correct the interference by one or more of the following measures:

- Reorient or relocate the receiving antenna.
- Increase the separation between the equipment and receiver.
-Connect the equipment into an outlet on a circuit different from that to which the receiver is connected.
-Consult the dealer or an experienced radio/TV technician for help

Changes or modifications not expressly approved by the party responsible for compliance could void the user's authority to operate the equipment.

This device complies with Part 15 of the FCC Rules. Operation is subject to the following two conditions:
(1) this device may not cause harmful interference, and (2) this device must accept any interference received, including interference that may cause undesired operation.

This device contains licence-exempt transmitter(s)/receiver(s) that comply with Innovation, Science and Economic Development Canada's licence-exempt RSS(s). Operation is subject to the following two conditions:
(1) This device may not cause interference.
(2) This device must accept any interference, including interference that may cause undesired operation of the device.

L'émetteur/récepteur exempt de licence contenu dans le présent appareil est conforme aux CNR d'Innovation, Sciences et Développement économique Canada applicables aux appareils radio exempts de licence. L'exploitation est autorisée aux deux conditions suivantes :
(1) L' appareil ne doit pas produire de brouillage;
(2) L' appareil doit accepter tout brouillage radioélectrique subi, même si le brouillage est susceptible d' en compromettre le fonctionnement.
RF Exposure Warning Statements:
This equipment complies with FCC radiation exposure limits set forth for an uncontrolled environment. This equipment shall be installed and operated with minimum distance 20cm between the radiator & body.
Radio Frequency Exposure Statement for IC:
This equipment complies with IC exposure limits set forth for an uncontrolled environment. This equipment shall be installed and operated with minimum distance 20cm between the radiator & body.

Cet équipement est conforme aux limites d'exposition IC définies pour un environnement non contrôlé. Cet équipement doit être installé et utilisé avec une distance minimale de 20 cm entre le radiateur et la carrosserie.

Declaration of RoHS2 Compliance

This product has been designed and manufactured in compliance with Directive 2011/65/EU of the European Parliament and the Council on restriction of the use of certain hazardous substances in electrical and electronic equipment (RoHS2 Directive) and is deemed to comply with the maximum concentration values issued by the European Technical Adaptation Committee (TAC) as shown below:

Substance	Proposed Maximum Concentration	Actual Concentration
Lead (Pb)	0.1%	< 0.1%
Mercury (Hg)	0.1%	< 0.1%
Cadmium (Cd)	0.01%	< 0.01%
Hexavalent Chromium (Cr^{6+})	0.1%	< 0.1%
Polybrominated biphenyls (PBB)	0.1%	< 0.1%
Polybrominated diphenyl ethers (PBDE)	0.1%	< 0.1%
Bis(2-ethylhexyl) phthalate (DEHP)	0.1%	< 0.1%
Butyl benzyl phthalate (BBP)	0.1%	< 0.1%
Dibutyl phthalate (DBP)	0.1%	< 0.1%
Diisobutyl phthalate (DIBP)	0.1%	< 0.1%

Certain components of products as stated above are exempted under the Annex III of the RoHS2 Directives as noted below:

Examples of exempted components are:

1. Mercury in cold cathode fluorescent lamps and external electrode fluorescent lamps (CCFL and EEFL) for special purposes not exceeding (per lamp):
   (1) Short length (≦500 mm): maximum 3.5 mg per lamp.
   (2) Medium length (＞500 mm and ≦1,500 mm): maximum 5 mg per lamp.
   (3) Long length (＞1,500 mm): maximum 13 mg per lamp.
2. Lead in glass of cathode ray tubes.
3. Lead in glass of fluorescent tubes not exceeding 0.2% by weight.
4. Lead as an alloying element in aluminium containing up to 0.4% lead by weight.
5. Copper alloy containing up to 4% lead by weight.
6. Lead in high melting temperature type solders (i.e. lead-based alloys containing 85% by weight or more lead).
7. Electrical and electronic components containing lead in a glass or ceramic other than dielectric ceramic in capacitors, e.g. piezoelectronic devices, or in a glass or ceramic matrix compound.

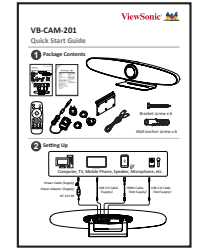

http://www.viewsonic.com/support/

Country/ Region	Website/Phone	Country/ Region	Website/Phone
Asia Pacific & Africa			
Australia	www.viewsonic.com/au/	Bangladesh	www.viewsonic.com/bd/
中国 (China)	www.viewsonic.com.cn 4008 988 188	香港 (繁體中文)	www.viewsonic.com/hk/
Hong Kong (English)	www.viewsonic.com/hk-en/	India	www.viewsonic.com/in/
Indonesia	www.viewsonic.com/id/	Israel	www.viewsonic.com/il/
日本 (Japan)	www.viewsonic.com/jp/	한국	www.viewsonic.com/kr/
Malaysia	www.viewsonic.com/my/	Middle East	www.viewsonic.com/me/
Myanmar	www.viewsonic.com/mm/	Nepal	www.viewsonic.com/np/
New Zealand	www.viewsonic.com/nz/	Pakistan	www.viewsonic.com/pk/
Philippines	www.viewsonic.com/ph/	Singapore	www.viewsonic.com/sg/
臺灣 (Taiwan)	www.viewsonic.com/tw/	ประเทศไทย	www.viewsonic.com/th/
Việt Nam	www.viewsonic.com/vn/	South Africa & Mauritius	www.viewsonic.com/za/
Americas			
United States	www.viewsonic.com/us 1-800-688-6688	Canada	www.viewsonic.com/us 1-866-463-4775
Latin America	www.viewsonic.com/la		
Europe			
Europe	www.viewsonic.com/eu/ +49-0821-45057383	France	www.viewsonic.com/fr/
Deutschland	www.viewsonic.com/de/	Қазақстан	www.viewsonic.com/kz/
Россия	www.viewsonic.com/ru/	España	www.viewsonic.com/es/
Türkiye	www.viewsonic.com/tr/	Україна	www.viewsonic.com/ua/
United Kingdom	www.viewsonic.com/uk/		

VB-CAM-201_QSG_1a_20201229
Copyright © 2021 ViewSonic Corporation. All rights reserved.