Antenna Test Report

Report No.: AGC08389250804PA01

PRODUCT DESIGNATION	:	Digital picture frame
BRAND NAME	:	N/A
MODEL NAME	:	102K, 101K, 101KZ, 102KZ, 103K, 103KZ, 105K, 105KZ, 106K, 106KZ, 110K, 110KZ, 111K, 111KZ, 112K, 112KZ, 114K, 114KZ, 119K, 119KZ, 120K, 120KZ, 156K, 156KZ, 157K, 157KZ, 158K, 158KZ, 159K, 159KZ, 160K, 160KZ, 215K, 215KZ, 216K, 216KZ, 320K, 320KZ, 321K, 321KZ, 101C, 102C, 103C, 156C, 157C, 158C, 159C, 160C, 215C, 216C, 217C, 320C, 321C
APPLICANT	:	Shenzhen Kejinming Electronic Co., Ltd.
DATE OF ISSUE	:	Sep. 10, 2025
REPORT VERSION	:	V1.0

Attestation of Global Compliance (Shenzhen) Co., Ltd

Any report having not been signed by authorized approver, or having been altered without authorization, or having not been stamped by the "Dedicated Testing/Inspection Stamp" is deemed to be invalid. Copying or excerpting portion of, or altering the content of the report is not permitted without the written authorization of AGC. The test results presented in the report apply only to the tested sample. Any objections to report issued by AGC should be submitted to AGC within 15days after the issuance of the test report. Further enquiry of validity or verification of the test report should be addressed to AGC by agc01@agccert.com.

Attestation of Global Compliance(Shenzhen)Co., Ltd
Attestation of Global Compliance(Shenzhen)Std & Tech Co., Ltd
Tel: +86-755 2523 4088 E-mail: agc@agccert.com Web: http://www.agccert.com/

Report Revise Record

Report Version	Revise Time	Issued Date	Valid Version	Notes
V1.0	/	Sep. 10, 2025	Valid	Initial release

Any report having not been signed by authorized approver, or having been altered without authorization, or having not been stamped by the "Dedicated Testing/Inspection Stamp" is deemed to be invalid. Copying or excerpting portion of, or altering the content of the report is not permitted without the written authorization of AGC. The test results presented in the report apply only to the tested sample. Any objections to report issued by AGC should be submitted to AGC within 15days after the issuance of the test report. Further enquiry of validity or verification of the test report should be addressed to AGC by agc01@agccert.com.

TABLE OF CONTENTS

1. PRODUCT INFORMATON 4

2. TEST FACILITY 5

3. TEST EQUIPMENT LIST 5

4. MEASUREMENT UNCERTAINTY 5

5. TEST SUMMARY LIST 5

6. TEST SETUP 6

7. TEST RESULTS 7

7.1. VSWR 7
7.2. GAIN AND EFFICIENCY 8
7.3. RADIATION PATTERN 9

APPENDIX A: PHOTOGRAPHS OF TEST SETUP 11

APPENDIX B: PHOTOGRAPHS OF EUT 12

Any report having not been signed by authorized approver, or having been altered without authorization, or having not been stamped by the "Dedicated Testing/Inspection Stamp" is deemed to be invalid. Copying or excerpting portion of, or altering the content of the report is not permitted without the written authorization of AGC. The test results presented in the report apply only to the tested sample. Any objections to report issued by AGC should be submitted to AGC within 15days after the issuance of the test report. Further enquiry of validity or verification of the test report should be addressed to AGC by agc01@agccert.com.

1. PRODUCT INFORMATON

General information	
Applicant	Shenzhen Kejinming Electronic Co., Ltd.
Address	Floor1-6, BlockB7, YintianIndustrialPark, Yantian Community, XixiangStreet, Bao' anDist., Shenzhen, Guangdong, China
Manufacturer	Shenzhen Kejinming Electronic Co., Ltd.
Address	Floor1-6, BlockB7, YintianIndustrialPark, Yantian Community, XixiangStreet, Bao' anDist., Shenzhen, Guangdong, China
Factory	Shenzhen Kejinming Electronic Co., Ltd.
Address	Floor1-6, BlockB7, YintianIndustrialPark, Yantian Community, XixiangStreet, Bao' anDist., Shenzhen, Guangdong, China
Product Designation	Digital picture frame
Brand Name	N/A
Test Model	102K
Series Model(s)	101K, 101KZ, 102KZ, 103K, 103KZ, 105K, 105KZ, 106K, 106KZ, 110K, 110KZ, 111K, 111KZ, 112K, 112KZ, 114K, 114KZ, 119K, 119KZ, 120K, 120KZ, 156K, 156KZ, 157K, 157KZ, 158K, 158KZ, 159K, 159KZ, 160K, 160KZ, 215K, 215KZ, 216K, 216KZ, 320K, 320KZ, 321K, 321KZ, 101C, 102C, 103C, 156C, 157C, 158C, 159C, 160C, 215C, 216C, 217C, 320C, 321C
Difference Description	All the series models are the same as the test model except for the model names.
Date of receipt of test item	Aug. 14, 2025
Date of test	Aug. 14, 2025 to Sep. 10, 2025
Report Template	AGCRT-ER-PA/V1.0
Technical information	
Frequency Range	2400-2500MHz
Test Frequencies	2400MHz, 2410MHz, 2420MHz, 2430MHz, 2440MHz, 2450MHz, 2460MHz, 2470MHz, 2480MHz, 2490MHz, 2500MHz
Antenna Type	Integral Antenna
Dimensions	44.8mm*6.2mm
RF Cable	10cm
Impedance	50Ω
Maximum test values	Gain: 3.88dBi; Efficiency: 39.886%; VSWR: 1.098 U

Note: The test results of this report relate only to the tested sample identified in this report.

Prepared By	Thea Huang Thea Huang (Project Engineer)	Sep. 10, 2025
Reviewed By	Bibo Zhang Bibo Zhang (Reviewer)	Sep. 10, 2025
Approved By	Angela Li Angela Li (Authorized Officer)	Sep. 10, 2025

Any report having not been signed by authorized approver, or having been altered without authorization, or having not been stamped by the "Dedicated Testing/Inspection Stamp" is deemed to be invalid. Copying or excerpting portion of, or altering the content of the report is not permitted without the written authorization of AGC. The test results presented in the report apply only to the tested sample. Any objections to report issued by AGC should be submitted to AGC within 15days after the issuance of the test report. Further enquiry of validity or verification of the test report should be addressed to AGC by agc01@agccert.com.

2. TEST FACILITY

Test Site	Attestation of Global Compliance (Shenzhen) Co., Ltd
Location	1-2/F, Building 19, Junfeng Industrial Park, Chongqing Road, Heping Community, Fuhai Street, Bao'an District, Shenzhen, Guangdong, China

3. TEST EQUIPMENT LIST

Equipment	Manufacturer	Model	Cal. Date	Cal. Due
Antenna Measurement System	ETS-Lindgren	AMS-8600	Nov. 27, 2024	Nov. 26, 2025
Network Analyzer	R&S	101443	Jul. 18, 2025	Jul. 17, 2026
Test Software	ETS-Lindgren	EMQuest	Ver V1.12	N/A

4. MEASUREMENT UNCERTAINTY

The uncertainty is calculated using the methods suggested in the “Guide to the Expression of Uncertainty in measurement” (GUM) published by CISPR and ANSI.

- Uncertainty of VSWR, Uc = ±1.5dB
- Uncertainty of Gain, Uc = ±0.8dB

5. TEST SUMMARY LIST

NO.	Test item	Remark
1	VSWR	--
2	Gain and efficiency	--
3	Radiation pattern	--

Any report having not been signed by authorized approver, or having been altered without authorization, or having not been stamped by the “Dedicated Testing/Inspection Stamp” is deemed to be invalid. Copying or excerpting portion of, or altering the content of the report is not permitted without the written authorization of AGC. The test results presented in the report apply only to the tested sample. Any objections to report issued by AGC should be submitted to AGC within 15days after the issuance of the test report. Further enquiry of validity or verification of the test report should be addressed to AGC by agc01@agccert.com.

6. TEST SETUP

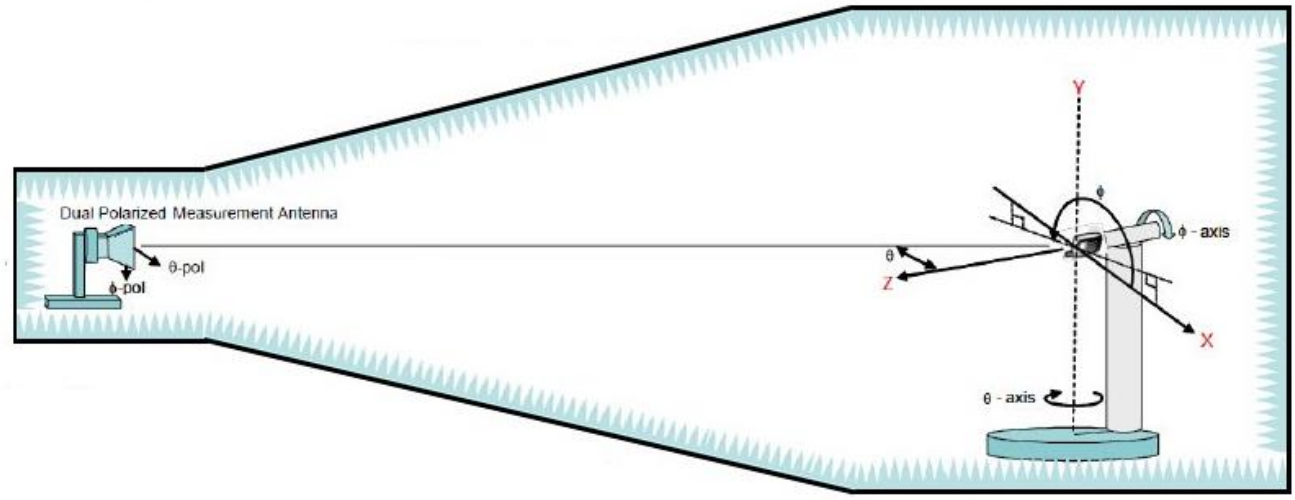

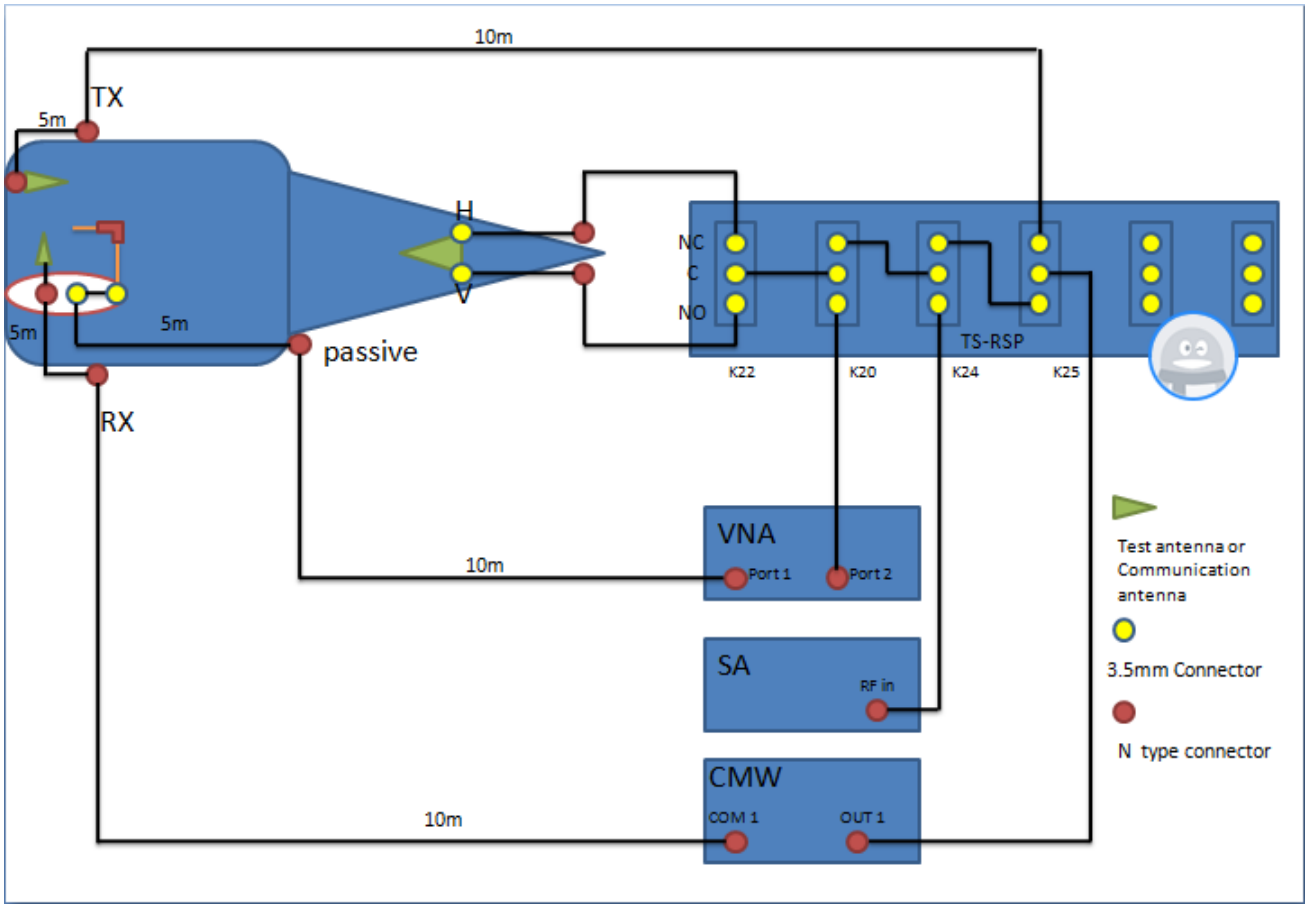

Any report having not been signed by authorized approver, or having been altered without authorization, or having not been stamped by the "Dedicated Testing/Inspection Stamp" is deemed to be invalid. Copying or excerpting portion of, or altering the content of the report is not permitted without the written authorization of AGC. The test results presented in the report apply only to the tested sample. Any objections to report issued by AGC should be submitted to AGC within 15days after the issuance of the test report. Further enquiry of validity or verification of the test report should be addressed to AGC by agc01@agccert.com.

7. TEST RESULTS

7.1. VSWR

Frequency(MHz)	VSWR
2402	1.084 U
2450	1.060 U
2480	1.081 U
2420	1.098 U

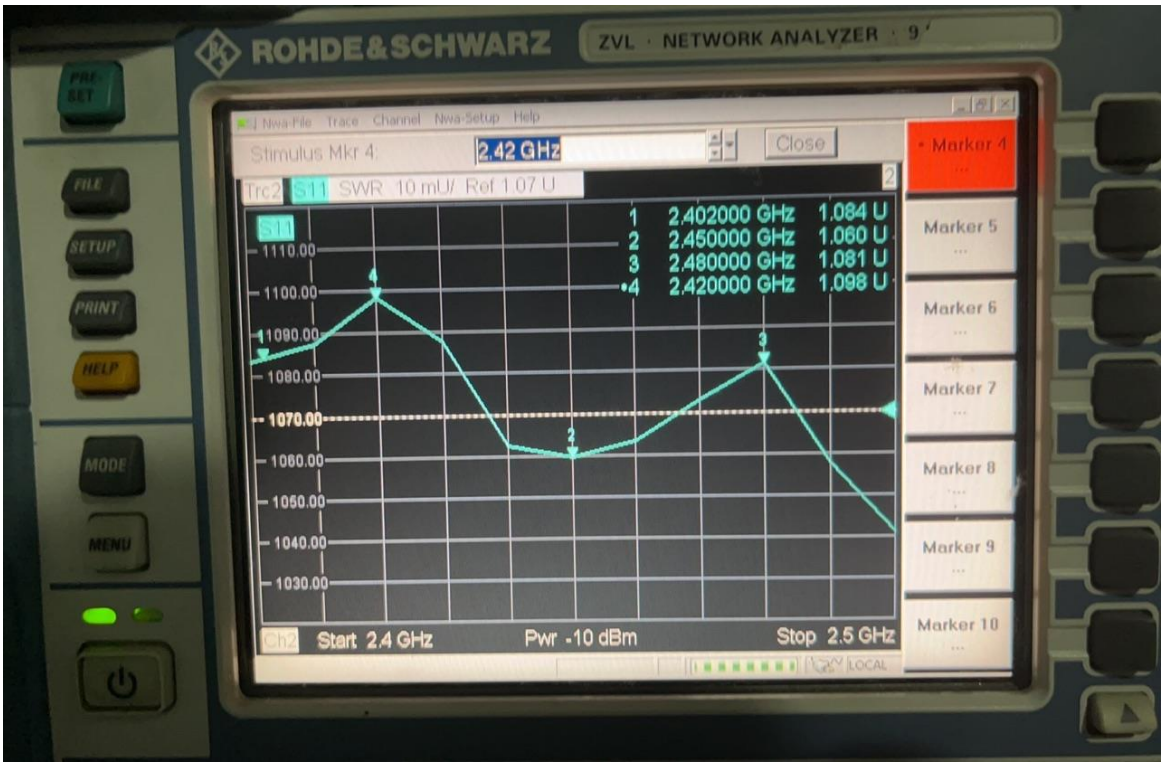

Any report having not been signed by authorized approver, or having been altered without authorization, or having not been stamped by the "Dedicated Testing/Inspection Stamp" is deemed to be invalid. Copying or excerpting portion of, or altering the content of the report is not permitted without the written authorization of AGC. The test results presented in the report apply only to the tested sample. Any objections to report issued by AGC should be submitted to AGC within 15days after the issuance of the test report. Further enquiry of validity or verification of the test report should be addressed to AGC by agc01@agccert.com.

7.2. GAIN AND EFFICIENCY

Frequency(MHz)	Efficiency(dB)	Efficiency(%)	Gain(dBi)
2400	-4.941	32.052	1.67
2410	-4.944	32.032	1.81
2420	-5.029	31.409	1.88
2430	-4.765	33.378	2.38
2440	-4.492	35.545	2.76
2450	-4.373	36.530	2.93
2460	-4.303	37.129	3.08
2470	-4.362	36.628	3.19
2480	-4.133	38.606	3.53
2490	-3.992	39.886	3.79
2500	-4.004	39.779	3.88

Any report having not been signed by authorized approver, or having been altered without authorization, or having not been stamped by the "Dedicated Testing/Inspection Stamp" is deemed to be invalid. Copying or excerpting portion of, or altering the content of the report is not permitted without the written authorization of AGC. The test results presented in the report apply only to the tested sample. Any objections to report issued by AGC should be submitted to AGC within 15days after the issuance of the test report. Further enquiry of validity or verification of the test report should be addressed to AGC by agc01@agccert.com.

7.3. RADIATION PATTERN

2D POLAR RADIATION PAT

FREQUENCY=2400MHZ

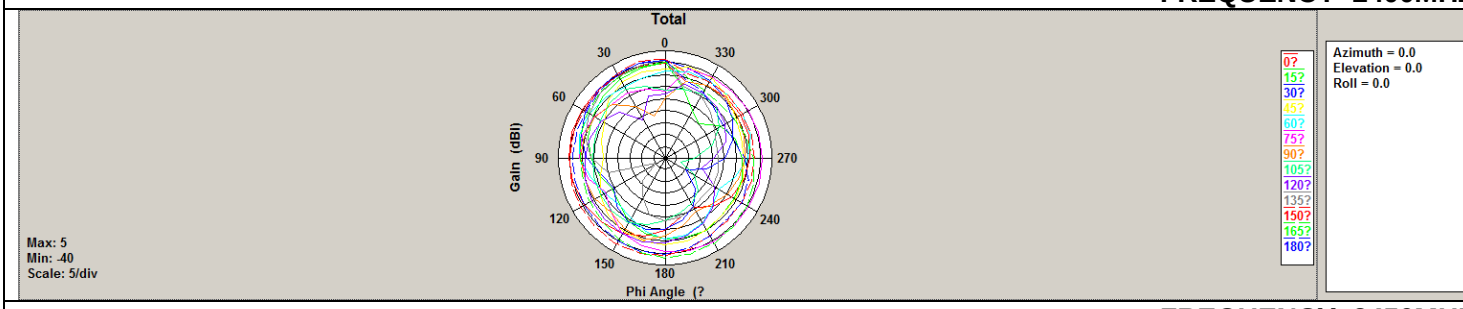

FREQUENCY=2450MHZ

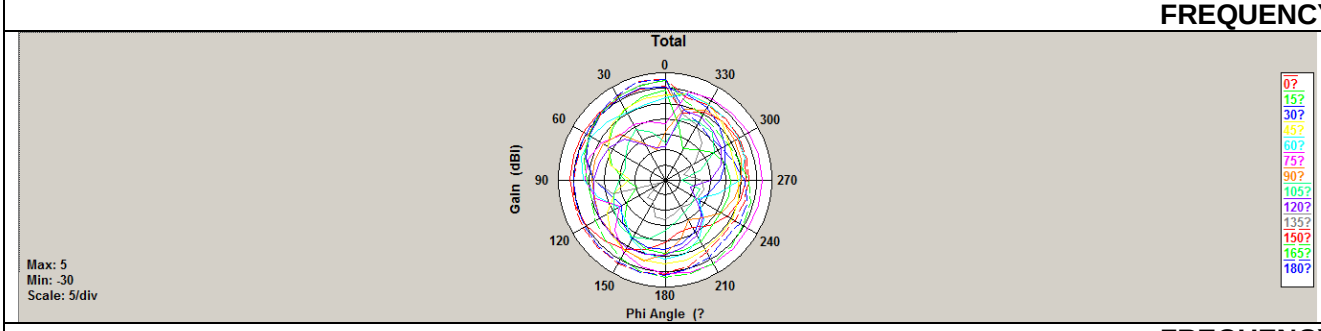

FREQUENCY=2500MHZ

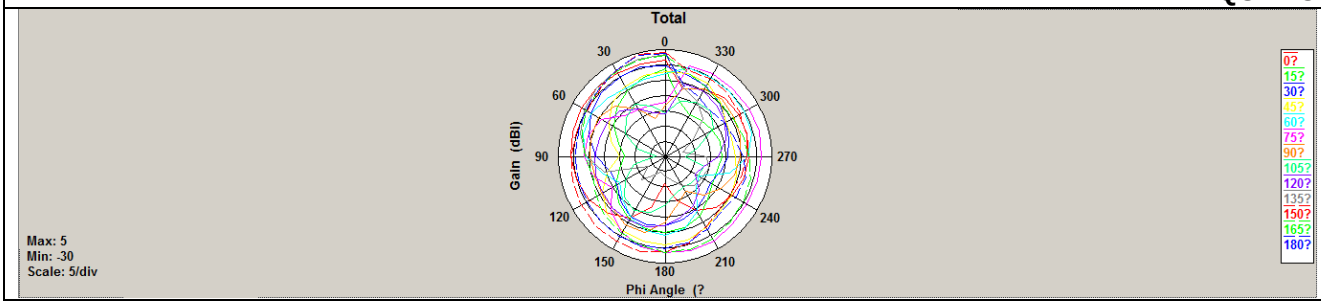

Any report having not been signed by authorized approver, or having been altered without authorization, or having not been stamped by the "Dedicated Testing/Inspection Stamp" is deemed to be invalid. Copying or excerpting portion of, or altering the content of the report is not permitted without the written authorization of AGC. The test results presented in the report apply only to the tested sample. Any objections to report issued by AGC should be submitted to AGC within 15days after the issuance of the test report. Further enquiry of validity or verification of the test report should be addressed to AGC by agc01@agccert.com.

3D RADIATION PATTERN
FREQUENCY=2400MHZ

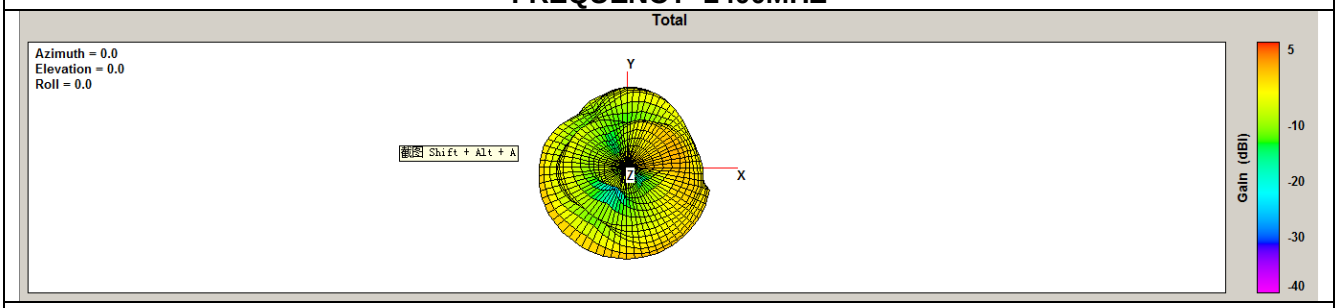

FREQUENCY=2450MHZ

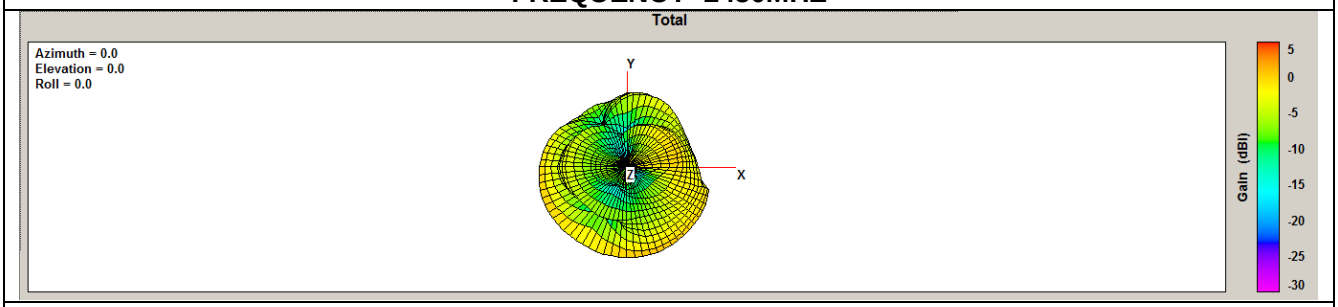

FREQUENCY=2500MHZ

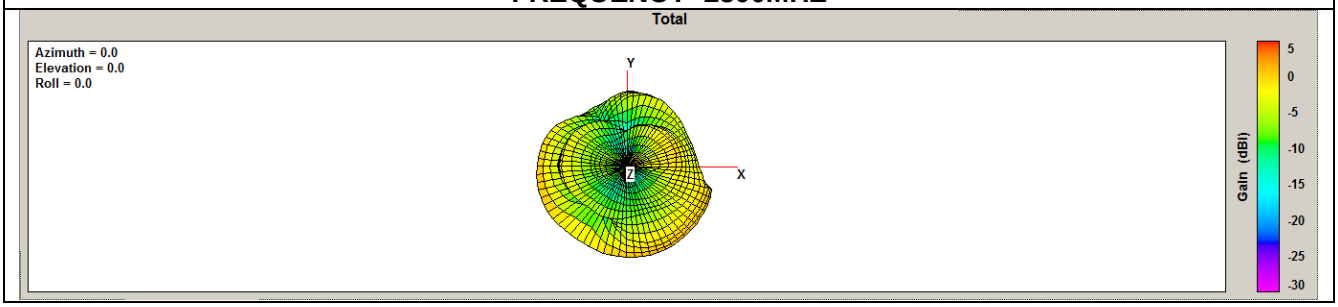

Any report having not been signed by authorized approver, or having been altered without authorization, or having not been stamped by the "Dedicated Testing/Inspection Stamp" is deemed to be invalid. Copying or excerpting portion of, or altering the content of the report is not permitted without the written authorization of AGC. The test results presented in the report apply only to the tested sample. Any objections to report issued by AGC should be submitted to AGC within 15days after the issuance of the test report. Further enquiry of validity or verification of the test report should be addressed to AGC by agc01@agccert.com.

APPENDIX A: PHOTOGRAPHS OF TEST SETUP

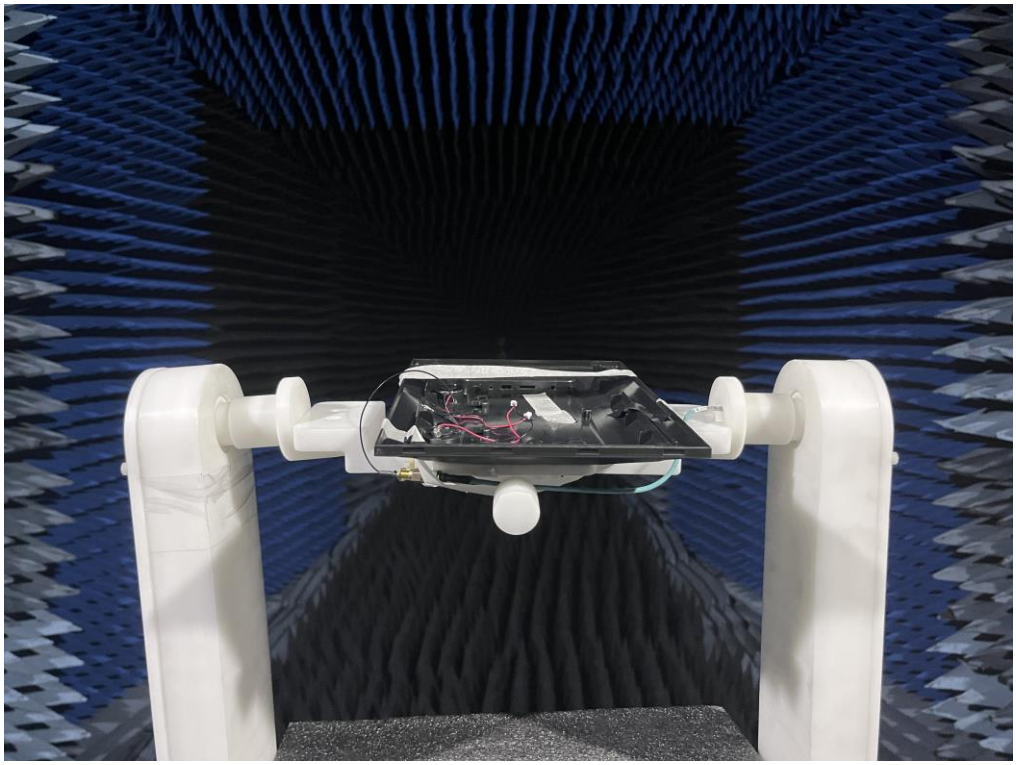

Any report having not been signed by authorized approver, or having been altered without authorization, or having not been stamped by the "Dedicated Testing/Inspection Stamp" is deemed to be invalid. Copying or excerpting portion of, or altering the content of the report is not permitted without the written authorization of AGC. The test results presented in the report apply only to the tested sample. Any objections to report issued by AGC should be submitted to AGC within 15days after the issuance of the test report. Further enquiry of validity or verification of the test report should be addressed to AGC by agc01@agccert.com.

APPENDIX B: PHOTOGRAPHS OF EUT

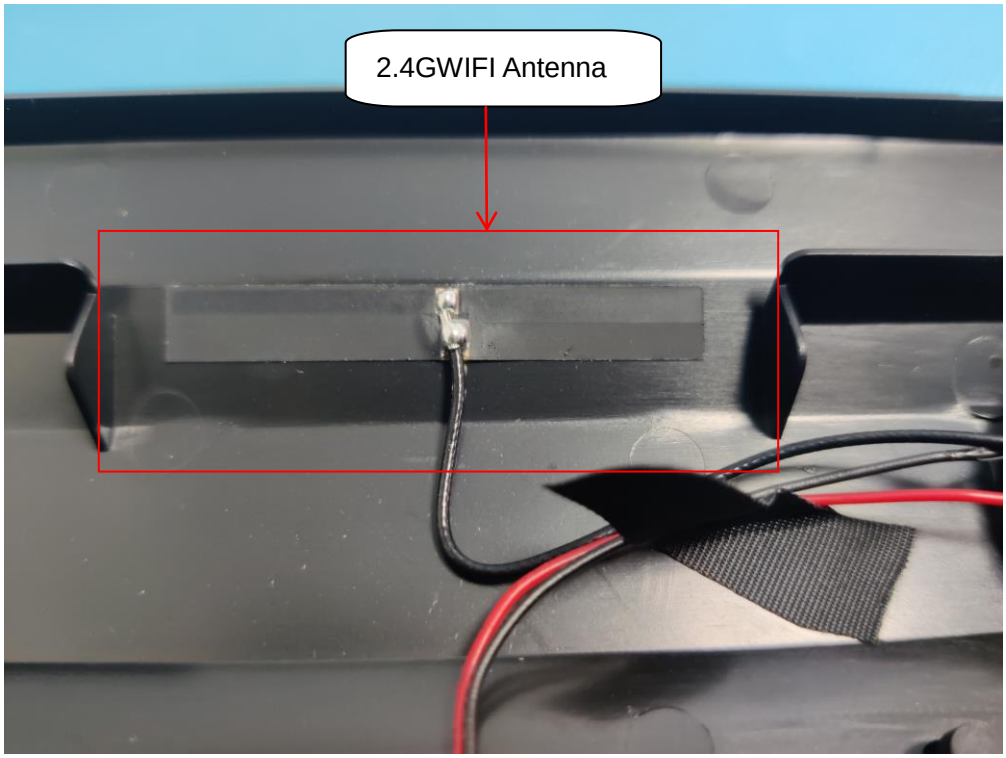

Any report having not been signed by authorized approver, or having been altered without authorization, or having not been stamped by the "Dedicated Testing/Inspection Stamp" is deemed to be invalid. Copying or excerpting portion of, or altering the content of the report is not permitted without the written authorization of AGC. The test results presented in the report apply only to the tested sample. Any objections to report issued by AGC should be submitted to AGC within 15days after the issuance of the test report. Further enquiry of validity or verification of the test report should be addressed to AGC by agc01@agccert.com.

Conditions of Issuance of Test Reports

1. All samples and goods are accepted by the Attestation of Global Compliance (Shenzhen) Co., Ltd (the "Company") solely for testing and reporting in accordance with the following terms and conditions. The company provides its services on the basis that such terms and conditions constitute express agreement between the company and any person, firm or company requesting its services (the "Clients").
2. Any report issued by Company as a result of this application for testing services (the "Report") shall be issued in confidence to the Clients and the Report will be strictly treated as such by the Company. It may not be reproduced either in its entirety or in part and it may not be used for advertising or other unauthorized purposes without the written consent of the Company. The Clients to whom the Report is issued may, however, show or send it, or a certified copy thereof prepared by the Company to its customer, supplier or other persons directly concerned. The Company will not, without the consent of the Clients, enter into any discussion or correspondence with any third party concerning the contents of the Report, unless required by the relevant governmental authorities, laws or court orders.
3. The Company shall not be called or be liable to be called to give evidence or testimony on the Report in a court of law without its prior written consent, unless required by the relevant governmental authorities, laws or court orders.
4. In the event of the improper use of the report as determined by the Company, the Company reserves the right to withdraw it, and to adopt any other additional remedies which may be appropriate.
5. Samples submitted for testing are accepted on the understanding that the Report issued cannot form the basis of, or be the instrument for, any legal action against the Company.
6. The Company will not be liable for or accept responsibility for any loss or damage however arising from the use of information contained in any of its Reports or in any communication whatsoever about its said tests or investigations.
7. Clients wishing to use the Report in court proceedings or arbitration shall inform the Company to that effect prior to submitting the sample for testing.
8. The Company is not responsible for recalling the electronic version of the original report when any revision is made to them. The Client assumes the responsibility to providing the revised version to any interested party who uses them.
9. Subject to the variable length of retention time for test data and report stored hereinto as otherwise specifically required by individual accreditation authorities, the Company will only keep the supporting test data and information of the test report for a period of six years. The data and information will be disposed of after the aforementioned retention period has elapsed. Under no circumstances shall we provide any data and information which has been disposed of after retention period. Under no circumstances shall we be liable for damage of any kind, including (but not limited to) compensatory damages, lost profits, lost data, or any form of special, incidental, indirect, consequential or punitive damages of any k
ind, whether based on breach of contract of warranty, tort (including negligence), product liability or otherwise, even if we are informed in advance of the possibility of such damages.

-----End of Report-----

Any report having not been signed by authorized approver, or having been altered without authorization, or having not been stamped by the "Dedicated Testing/Inspection Stamp" is deemed to be invalid. Copying or excerpting portion of, or altering the content of the report is not permitted without the written authorization of AGC. The test results presented in the report apply only to the tested sample. Any objections to report issued by AGC should be submitted to AGC within 15days after the issuance of the test report. Further enquiry of validity or verification of the test report should be addressed to AGC by agc01@agccert.com.