CSS-M-R11

V1.0

INSTALLATION HW 2.0

A. Package content

■ Controller x 1, Hanger x 1, Accessory kit x 1 (Plastic screw x 4, Fastening screw x 4, 1N4004 x 1), Cable (2pin x 1, 5pin x 1, 6pin x 1, 8pin with RJ45 x 1), CD x 1, Warranty card x 1, Installation Guide x 1

B. Specification

- Power input : 9-24V DC
- Recommended power : 12VDC / 500 mA or more
- Wiegand range : Max 100M
- RS485 range : Max 1000M
- Relay : DC30V-2A
- Default IP：192.168.0.66

■ Physical Dimension：78.5 x 129 x 23 (mm)

■ RECOMMENDED

- Cable with shielded, Linear DC power supply, Network cable.

■ Notice

- Do not connect other cable to the power except the power cable.
- Do not apply any unverified power supply, otherwise system may be damaged or have an unstable condition.

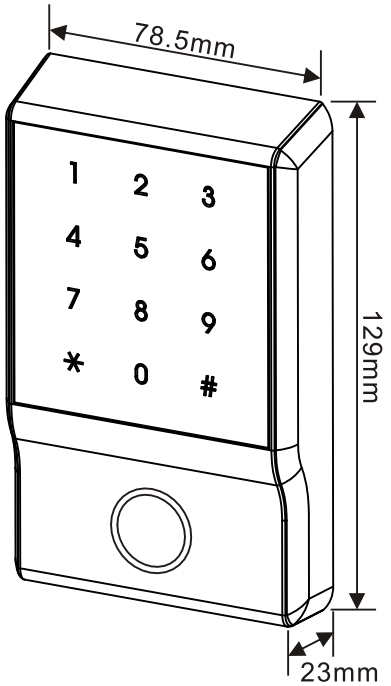

D. Installation

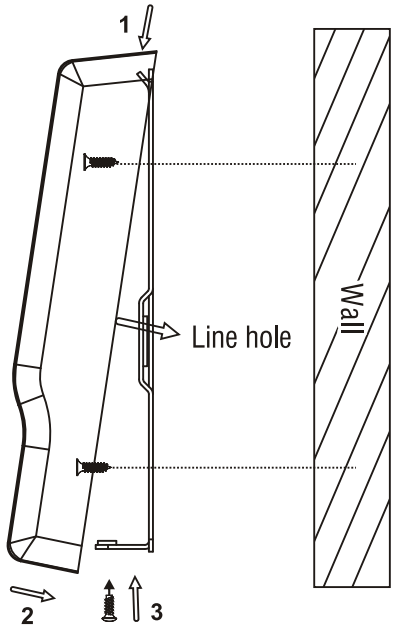

C. Action Description

Command	Buzz	LED	LED status
Run in boot (please contact technical)		White	flash per one sec
Standby mode		blue	flash per one sec
System ready for dummy reader (disconnected with SEMAC)		blue & red	alternately flash per one sec
Security active (To be SEMAC reader)		red	flash per one sec
Illegal card/password	1 long beep	red	keep light two sec
Available card/password	1 short beep	green	keep light until relay is not trigger
Force open/ unlock		green	keep light
Force close		red	keep light
IP conflict	1 short & 1 long beep	red & keypad	flash per one sec
Door open too long/Intrusion	keep short beep per one sec	red	flash per one sec until event is solved
Enter command mode	1 short beep	blue & red	together flash per one sec
Read card under command mode		blue & red	alternately flash per one sec
Modification fail	1 long beep		
Disassemble	keep beeping		
Waiting for next verification (Ex: Multiple verification time zone, card + password)		keypad	flash per one sec (contunte 10 sec)
Enter wrong password 3 times		keypad	No action 30 sec

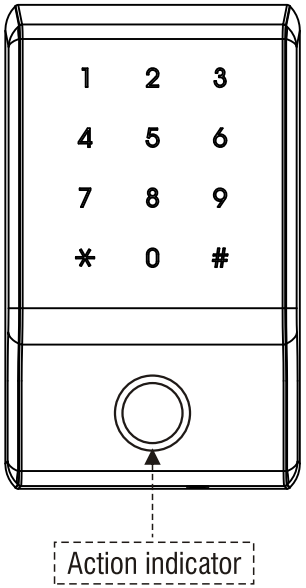

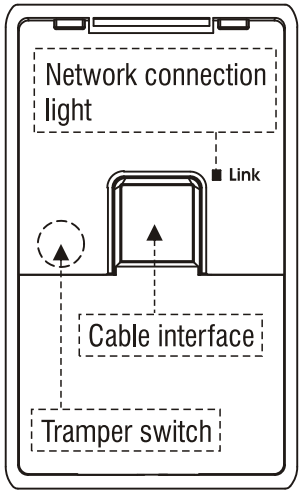

CSS-M-R11 Stand-alone Wiring Instructions

E. Application structure

(Stand-alone + WG Reader Architecture)

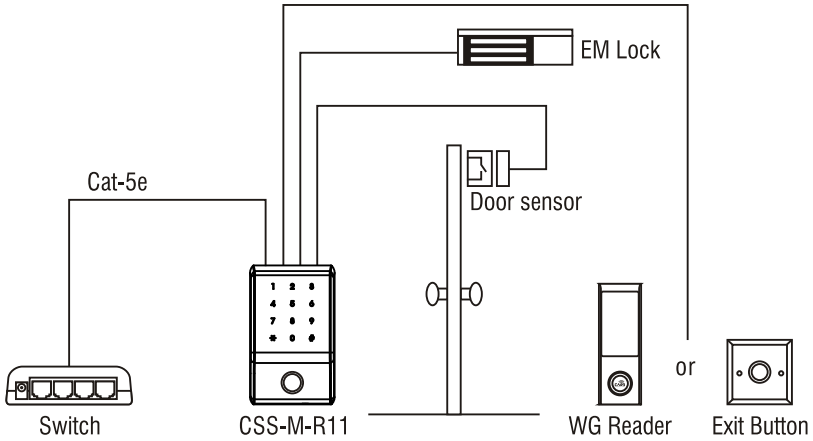

F. Cable description

	J9 8PIN with RJ45				CAT.5E		
J9	1	TX+	BROWN	↔	ORANGE / WHITE	TX+	Ethernet
	2	TX−	VIOLET	↔	ORANGE	TX−	
	3	RX+	WHITE	↔	GREEN / WHITE	RX+	
	4	RX−	BLUE	↔	GREEN	RX−	
	5	N/A	GREEN		N/A		
	6	N/A	YELLOW				
	7	N/A	BLACK				
	8	N/A	RED				

J8	1	VIN−	BLACK	Power Input DC9-24V/ 500mA
	2	VIN+	RED	

J3	1	WID0	VIOLET / WHITE	WG Input
	2	WID1	GREEN / WHITE	
	3	FIRE	ORANGE	Fire Alarm
	4	BUZZ	BLUE / BLACK	Control WG reader LED / buzzer action
	5	LED	YELLOW / BLACK	

J4	1	SENSOR	BLUE	Door Sensor
	2	GND	ORANGE	GND
	3	EXIT	VIOLET	Exit Button
	4	NC	YELLOW	Door Relay
	5	COM	GREEN	
	6	NO	WHITE	

G. Cable diagram

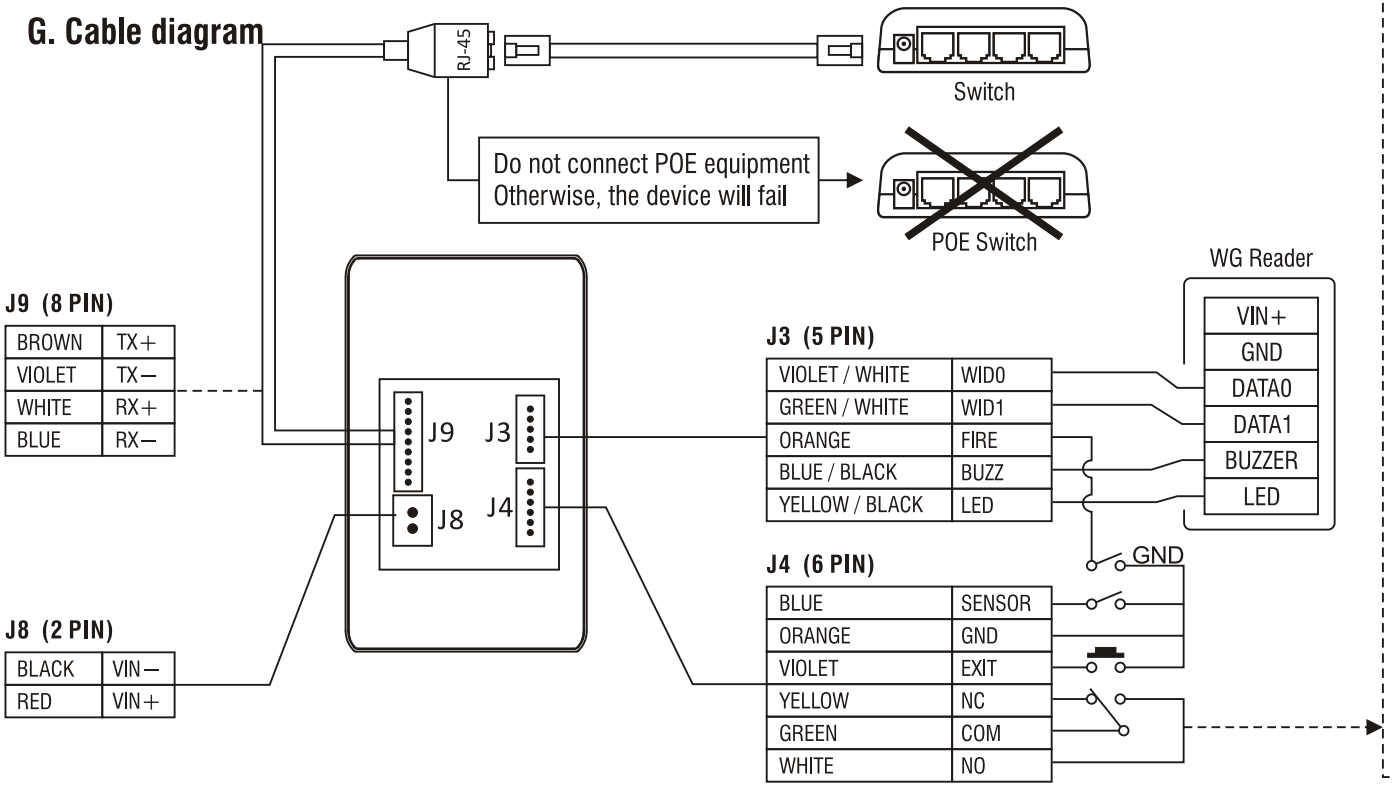

※ Door Relay Connect.

- Power off Lock

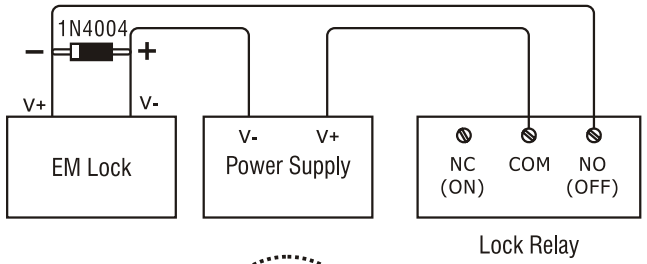

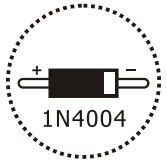

- Power on Lock

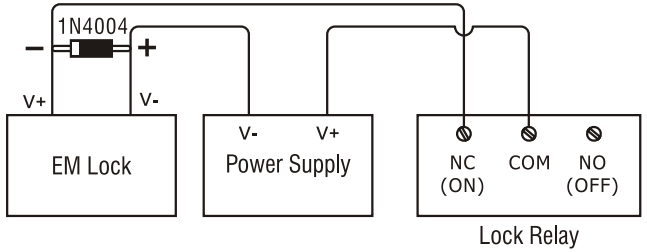

H. Standalone command operating instructions

Configuration Parameters	Action	Explanation
User ID number	UUUUUU	1～6 digits (standard version: 20,000)
Number of cards you want to register in WebPass	QQQQQQ	1～6 digits
Password	PPPPPPPP	4～8digits
Command	**Action**	**Explanation**
Enter to command mode	✱123456#	Default password: 123456 , Buzzer long beeps after entered to command mode. On Command Mode: Blue and Red LEDs flash in the same time. After 10sec, it will back to Normal mode: Blue LED flashes per second. Command Error: 1 long beep
Password modification for entering command mode	06✱ AAAAAA ✱ BBBBBB ✱ CCCCCC #	AAAAAA：Old password BBBBBB：New password CCCCCC：New password again ※ Password is 4～6 digits
Door open relay configuration (Door close delay time)	02✱ TTTTT #	Time for relay can be: 1-65535secs/ Default :10sec
Door open waiting time(Door open delay time)	03✱ TTTTT #	Time can be setting:1～65535 sec/Default:10sec
System time setting	04✱ HHMMSS #	HHMMSS＝Hour/Minute/Second(24H)
System date setting	05✱ YYMMDDX #	YYMMDDX＝Year/Month/Date/Weekday (YY＝AD last two digit= 2009＝09)
Setting for TID nr. (Terminal ID)	07✱ TTTTT #	TID nr. can be: 1 ～ 65535
Access control setting (Relay)	08✱ T #	T= 0/1/2 → Force Open/ Force Close/Back to Normal
Verification mode setting	09✱ T #	T =1～4 1：Card, Common Password, or Personal Password 2：Card only 3：Common Password or Personal Password 4：Card and Personal Password
Common Password setting	10✱ PPPPPPPP #	☆ Default is 1234, to cancel it, please go to web to remove it.
Add single user	11✱ UUUUUU # read card	Read card for registration (LED blue & red lighten)
Add single card + password user	11✱ UUUUUU ✱ PPPPPPPP # read card	Read card for registration (LED blue & red lighten)
Add many users: card numbers are continuous	12✱ UUUUUU ✱ QQQQQQ # read card	Just Put the card with the smallest card number to Reader
Add many users: card numbers are discontinuous	13✱ UUUUUU ✱ QQQQQQ # read card	Put the cards one by one to Reader
Disable user account(User status : Cancel)	14✱ UUUUUU #	
Enable user account (User status: Active)	15✱ UUUUUU #	
User password modification	16✱ UUUUUU ✱ PPPPPPPP #	4～8 digits (Password)
Modify user card Number	17✱ UUUUUU # read card	
Delete single user account	21✱ UUUUUU #	
Delete /continuous user accounts	22✱ UUUUUU ✱ QQQQQQ #	
Delete all of user accounts	23✱29✱#	
Exit from command Mode	✱#	

Federal Communication Commission Interference Statement

This equipment has been tested and found to comply with the limits for a Class B digital device, pursuant to Part 15 of the FCC Rules. These limits are designed to provide reasonable protection against harmful interference in a residential installation.

This equipment generates, uses and can radiate radio frequency energy and, if not installed and used in accordance with the instructions, may cause harmful interference to radio communications. However, there is no guarantee that interference will not occur in a particular installation. If this equipment does cause harmful interference to radio or television reception, which can be determined by turning the equipment off and on, the user is encouraged to try to correct the interference by one of the following measures:
. Reorient or relocate the receiving antenna.
. Increase the separation between the equipment and receiver.
. Connect the equipment into an outlet on a circuit different from that to which the receiver is connected.
. Consult the dealer or an experienced radio/TV technician for help.

FCC Caution: To assure continued compliance, any changes or modifications not expressly approved by the party responsible for compliance could void the user's authority to operate this equipment. (Example - use only shielded interface cables when connecting to computer or peripheral devices).

This device complies with Part 15 of the FCC Rules. Operation is subject to the following two conditions:
(1) This device may not cause harmful interference, and (2) This device must accept any interference received, including interference that may cause undesired operation.